Bench Mark Reset Procedures

Guidelines to preserve elevation data for a ***soon-to-be disturbed*** or ***soon-to-be destroyed*** bench mark

Documented by
Curtis L. Smith
National Geodetic Survey
Silver Spring MD 20910
September 2010

NATIONAL GEODETIC SURVEY
United States Department Of Commerce
National Oceanic and Atmospheric Administration
National Ocean Service

Contents

Relocating Vertical Control Bench Marks 2

Setting a New Bench Mark 2

Single Mark Level Tie (3rd Order). 3

Observing Sequence for Optical Leveling Equipment 4

Observing Sequence for Digital Leveling Equipment 6

When Reference Points Are Required. 8

Destroyed Bench Marks 9

Data Review and Final Adjusted Elevations. 9

Data Submission 9

Bibliography. 9

Attachment A. Guidelines and Procedures to Replace a Destroyed Bench Mark
Along an Existing Level Line and Maintain Original Order of Accuracy 10

Attachment B. New or Replacement Survey Monuments 12

Concrete Monument 12

Survey Disk Set in Bedrock or Structure 14

Survey Disk in Structure 16

NGS 3-D Deep Driven Rod Mark. 16

Attachment C. Written Station Descriptions and Digital Photographs 18

Relocating Vertical Control Bench Marks

The purpose of these guidelines is to provide the necessary information to preserve elevation data for a soon-to-be disturbed or soon-to-be destroyed bench mark[1]. It is imperative that elevation information be transferred or referenced from the original bench mark prior to its being disturbed or destroyed. Note that such destruction or disturbance remains illegal (18 USC Sec. 1858). However, that law has long been recognized as more of a deterrent than an enforceable statute. NGS understands that bench mark resets will occur, despite the law, and therefore recognizes the need for a document to define standards for such resets. The support and cooperation of local surveyors and engineers is not only important, but essential to preservation of bench marks.

Each vertical control bench mark represents a large investment of resources. Since it is intended for a bench mark to provide a continuous record of elevation changes, as well as vertical control for many local surveyors, its preservation is vital. Although bench marks are constructed in locations where they are less likely to be disturbed, many are disturbed or destroyed by: highway rebuilding and retrofitting; railroad maintenance; urban development; addition of buried utilities; and building construction and demolition.

If an existing U.S. Coast and Geodetic Survey (USC&GS), National Geodetic Survey (NGS), U.S. Geological Survey (USGS), or other agency bench mark whose geodetic information resides in the database on the NGS Internet site (available at geodesy.noaa.gov) is about to be disturbed or destroyed, a representative of NGS should be contacted for further information and direction to reset the monument. Points of contact for many states are listed under the State Advisors link on the NGS Internet site (also see page 11 of this document; contact NGS directly if your state is not listed). Typical reset bench marks are published as 3rd Order elevations, due to the single bench mark reference to determine elevation. Refer to Attachment A for minimum requirements to maintain the order and class of the original bench mark.

Note: Verify the survey mark in question has a published vertical order listing accurate to 1st or 2nd Order through the NGS Web site before resetting the mark. Resets of existing 3rd Order vertical control or resets of marks that have already been reset and are published as 3rd Order vertical control are not acceptable. If the mark has additional other control (e.g., horizontal, gravity, etc.), effort should be made to transfer the other data if possible. Contact a representative of NGS, as described above, for further help and direction in perpetuating this additional control.

There are two general situations that occur when a bench mark is to be destroyed: (1) there is time available to reset a new monument in the vicinity before the threatened mark is destroyed, and (2) the threatened mark will be destroyed before the new mark can be set. The latter case generally occurs when the location of the new (replacement) mark is not yet suitable or available for its physical establishment. This is often the case when the new mark will not be set until a new bridge or culvert head wall is constructed. Guidelines for both cases are presented in this document.

[1] The term "bench mark" refers to a specific type of survey monument that is used to define the orthometric height of a location.

Setting a New Bench Mark

Use a new NGS bench mark disk, if available, or your agency bench mark disk, and provide appropriate stamping. The new disk will be stamped with the same designation as the soon-to-be or already destroyed bench mark. It will be stamped with the word RESET and the year of the reset; for example, a bench mark designated M 123 reset in the year 2006, would be stamped M 123 RESET 2006 (see Figure 1).

Select a suitable site for the new bench mark, if possible, within one setup from the bench mark to be replaced. Establish the bench mark, as described in Attachment B of this document. Bench marks are generally set in a poured-in-place, concrete monument, in an existing stable concrete foundation (bridge abutment), in a drill hole in bedrock, or as a deep rod mark driven to refusal. NGS can provide guidance and information on other types of settings as well.

Level observations between the points must satisfy 3rd Order or better accuracy standards. Sight lengths must be limited to 70 meters, for the 3rd Order standard. Where possible, the replacement mark should therefore be set within about 140 meters of the old mark. The replacement mark must be set no farther than four setups apart, i.e., no more than 560 meters. Resets greater than four setups from the original mark will not be accepted unless they are observed following a minimum of 2nd Order, Class II procedures. Contact an NGS representative to discuss specific site conditions and possible options. Refer to the "FGCS Specifications and Procedures to Incorporate Electronic Digital/Bar-Code Leveling Systems" for 3rd and higher order accuracy leveling requirements.

Figure 1. Sample disk stamping.

Note: It is not necessary to establish the new mark at the same elevation or exact same location as the old mark.

A witness post should be set within 2 meters of the relocated mark, if possible. (Occasionally the setting of a witness post can be skipped, especially if it will pose a hazard or draw unwanted attention, such as in urban areas.) Remove any witness posts for the destroyed bench mark. A complete description of the new mark must be provided with the information identified in the "Report on Location and Description of Reset Bench Mark" form (downloadable from the NGS Internet site). A sketch of the location is beneficial for comparison with the written description. Clear digital photographs of the disk should be provided which confirm agency information, disk size and type, and designation stamping. Legible pencil rubbings of the disk are acceptable in the event a clear digital photograph is not possible. Written station description and digital photograph guidelines are available in Attachment C. A recovery note for the old mark should be entered via the NGS On-line Mark Recovery Entry Form providing text describing the proposed destruction of the old mark or by following the posted directions to report the mark as destroyed.

Single Mark Level Tie (3rd Order)

An assumed elevation for the old mark can be used in the leveling since the principal concern is with the difference of elevation between the old mark and the new one. It should be noted; the elevation for the newly relocated bench mark will only be published to the nearest 0.01 meter, or 0.1 feet, because the absolute elevation of the bench mark to be destroyed cannot be verified without incorporating other bench marks into the survey, as a check. Many projects do not provide the resources required for multiple mark checks, but it is still imperative that the mark be reset to the best precision allowable.

Geodetic quality level instruments and rods should be used to transfer reset elevations to new bench marks. Refer to Annex F of the "Input Formats and Specifications of the National Geodetic Survey Data Base" for a listing of

equipment and their related codes. The instrument and rod combined resolution's least count should be 1.0 millimeters, or 0.005 feet, or better. Refer to the "FGCS Specifications and Procedures to Incorporate Electronic Digital/Bar-Code Leveling Systems" for 3rd and higher order accuracy leveling procedures and equipment requirements.

Record rod readings, at a minimum, to millimeters, or thousandths of feet. The model and type of instrument and rods used (e.g., fiberglass, aluminum, single piece, etc.), as well as rod scale units (e.g., meters, feet, or bar code) should be entered on the "Observations for Relocation of Bench Mark" form (downloadable from the NGS internet site), where indicated.

Observing Sequence for Optical Leveling Equipment

1. Remove equipment from travel cases, attach level instrument to tripod, and let equipment acclimate to local conditions, usually about 10 to 15 minutes. Perform instrument collimation check (peg test) per manufacturer's instructions and record in field notes.

2. Firmly setup and plumb the instrument halfway between the old and new bench marks (see Figure 2). Limit sight lengths to no more than 70 meters (230 feet), from the instrument to either bench mark, or from the instrument to one bench mark and a turning pin, or when between two turning pins, in the case of multiple setup requirements, e.g., distance between bench marks is greater than 140 meters (459 feet), see Figure 3. Backsight distance to foresight distance imbalance must be less than 5 meters (16.4 feet). Accumulated backsight to foresight distance imbalance must be less than 10 meters (32.8 feet), in the case of multiple setups. Level instrument using tribrach foot screws following equipment leveling procedures.

Figure 2. Direct old mark to new mark level tie. Backsight-foresight distance imbalance must be less than 5 meters.

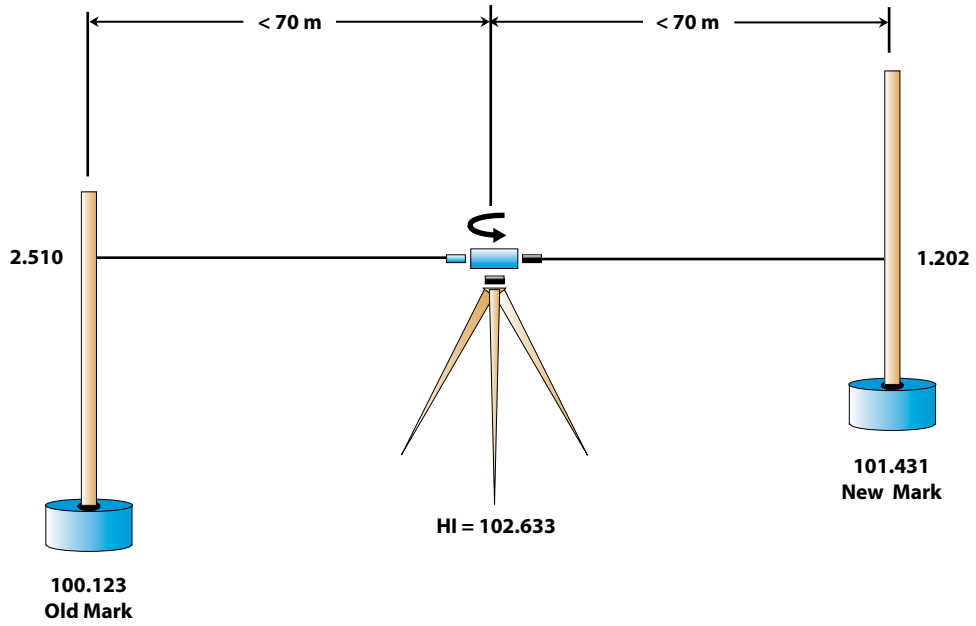

3. Plumb level rod on highest point of old mark, e.g., on the domed top of disk M 123. Record the designation and published elevation of the starting bench mark, noting vertical datum and units of measure (such information is available from the NGS Integrated Database, most frequently in a format called "datasheets." See the NGS Internet site for more information). Record the equipment information, such as model and serial numbers, observer and rodmen names, and starting time with appropriate date and time zone on the recording form.

4. Backsight Reading: Observe intercept of middle reticule of the rod scale to get the backsight reading. Record rod reading to the best precision possible, as indicated above. Observe the stadia reading to determine distance from the point to the instrument and record distance on recording form. If the distance from the instrument to the back rod is greater than the allowable, reset the instrument within the allowable distance and reobserve and record the backsight reading and distance.

5. Compute height of instrument (HI), - the sum of the backsight and the published or starting elevation.

6. Plumb level rod on highest point of new bench mark. Record the designation of the new mark, e.g., M 123 RESET, or TP1 (for turning point 1, in the case of multiple setups).

7. Foresight Reading: Observe intercept of middle reticule of the rod scale to get the foresight reading. Observe the stadia reading to determine the distance from the instrument to the point and record on the form. Again, this distance must be within the allowable sight length distance, or a multiple setup leveling between the old and new points must be observed, as illustrated in Figure 3. Make sure backsight and foresight distance imbalance does not exceed the tolerances indicated in step 2 above. If the distance imbalance is greater than the allowable, move the instrument to a position that will be within this tolerance and reobserve both the backsight and foresight rod and stadia readings.

Figure 3. Old mark to new mark level tie for distances for 140 meters. Accumulated backsight - foresight setup imbalance must be less thatn 10 meters.

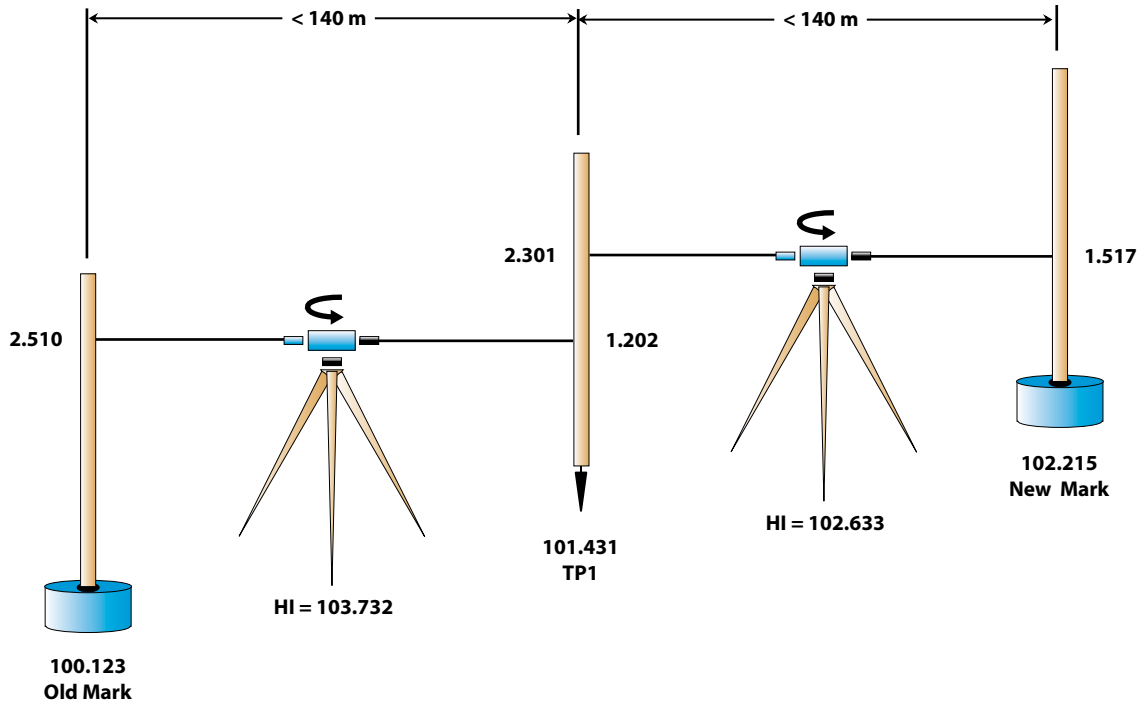

8. Compute the elevation of the new point, either the new bench mark or the turning point; this is the difference of the HI (computed in Step 5) minus the foresight.

If additional setups are needed, evenly split the difference between the last fore turning point – now new backsight - and the new bench mark, with the instrument, or advance no farther than 70 meters (230 feet) from the new back turning point (old fore turning point); then reset the instrument. Advance back rod same distance ahead of instrument, within 5 meters (16.4 feet), to new fore turning point, or to the new bench mark. Repeat steps 2 through 8, until you have reached the new bench mark. Ensure the accumulated backsight to foresight distance imbalance is less than 10 meters (32.8 feet). This is accomplished by selecting the instrument's location in relationship to the rods' so the accumulated distance imbalance is minimized through compensating longer or shorter foresight lengths.

Always plan the observations between the old and new points so that the same rod is set on the starting and ending bench mark. In the case of using two rods, for leveling in a multiple setup leveling scenario, always start and end with the same rod on the bench mark, i.e., produces an even number of setups. This ensures systematic error, with regards to the level rods, cancels during the leveling observations.

9. When the last setup has been observed, record the ending time, and weather conditions, e.g., temperature observed at instrument height with units, wind effects, and sun conditions during the level observations, on the recording form.

10. All observations between the old and new points must be confirmed by performing double-run leveling, forwards and backwards, which will provide elevation differences opposite in numerical sign. Leveling from the old point to the new point provides the forward leveling and leveling from the new point to the old point provides the backward leveling. For return observations, reset and re-level the instrument, even when only one turn is required. Level backward from new point to the old, in the same manner as steps 2 through 8.

Note: The observed elevation difference for the forward and backward leveling, between the old and new points, for 3rd Order leveling, may differ by no more than 2.0 millimeters for a one-setup section, 3.79 millimeters for multiple setup sections less than 0.10 kilometers in length, or 12 millimeters × √D, where D is the shortest one-way length of section in kilometers, for sections greater than 0.10 kilometers.

Agreement of Observed Elevation Differences, Observed Backward and Forward During:				
Condition	1st Order, Class II	2nd Order, Class I	2nd Order, Class II	3rd Order
One-setup section	+/- 0.50 mm	+/- 1.00 mm	+/- 1.50 mm	+/- 2.00 mm
2-runnings of section < 0.10 km in length	+/- 1.26 mm	+/- 1.90 mm	+/- 2.53 mm	+/- 3.79 mm
2-runnings of section of one-way length D: T*√D mm, T =	+/- 4.00	+/- 6.00	+/- 8.00	+/- 12.00

Table 1. Tolerances for Geodetic Leveling

11. To compute the elevation difference from the old mark to the new, average the two elevation differences between the old mark and the new mark maintaining the sign, positive or negative, of the leveling from the old to the new mark, i.e., forward leveling. The field elevation for the new bench mark will be the average computed difference (the mean of both the forward and backward leveling) plus the published elevation of the old bench mark.

Note: The old mark should not be disturbed until observations involved in the leveling have been checked by the observer or recorder to ensure required procedures and closures have been met.

Observing Sequence for Digital Leveling Equipment

These observing procedures are intended for use with digital levels only.

1. Remove equipment from travel cases, attach level instrument to tripod, and let equipment acclimate to local conditions, usually about 10 to 15 minutes. Perform an instrument collimation check (two-peg test) to determine instrument collimation error. The determined value should meet specifications and set to be applied to all future field observations, as outlined in the digital level user's manual.

2. Firmly set up and plumb the instrument about halfway between old and new bench marks. Limit sight lengths to no more than 70 meters (230 feet), from the instrument to either bench mark, or from the instrument to one bench mark and a turning pin, or when between two turning pins, in the case of multiple setup requirements, e.g., distance between bench marks is greater than 140 meters (459 feet). Backsight distance to foresight distance imbalance must be less than 5 meters (16.4 feet). Accumulated backsight to foresight distance imbalance must be less than 10 meters (32.8 feet) in the case of multiple setups.

Level instrument using tribrach foot screws to center bull's-eye bubble. Turn on instrument and select backsight/foresight level program. Set and confirm instrument parameters, e.g., averaging three measurements; display maximum decimal places; record readings; and other observing configuration information, such as rod type, and metric units. The starting elevation for the old point should be set to 0.0000 (zero), as the difference in elevation between the new and old points is being determined in the field.

3. Plumb level rod on highest point of old mark, e.g., on the domed top of disk M 123. Record the designation and published elevation of the starting bench mark, noting vertical datum and units of measure (such information is available from the NGS Integrated Database, most frequently in a format called "datasheets". See the NGS Internet site for more information). Record equipment information, such as model and serial numbers, determined instrument collimation, observer and rodmen names, and starting time with appropriate date and time zone on the recording form.

4. Backsight Reading: Sight through instrument and align vertical crosshair in middle of bar-code for rod on the old mark. Use focusing knob to bring the bar-code image into sharp focus. Depress measure button and record rod reading. Note distance from rod to instrument. It should be less than 70 meters (230 feet). If the distance from the instrument to the back rod is greater than the allowable, reset the instrument within the allowable distance and reobserve and record the backsight reading and distance.

5. Plumb rod on highest point of new bench mark. Record designation of new mark, e.g., M 123 RESET, or TP1 (for turning point 1, in the case of multiple setups).

6. Foresight Reading: Point and focus the level instrument on the rod over the new mark. Depress measure button and record rod reading. Note distance from rod to instrument; it should be less than 70 meters (230 feet). Again, this distance must be within the allowable sight length distance, or a multiple setup leveling between the old and new points must be observed, as illustrated in Figure 3. Note imbalance between backsight and foresight distances; the difference should be less than 5 meters (16.4 feet). If the distance imbalance is greater than the allowable, move the instrument to a position that will be within this tolerance and reobserve both the backsight and foresight rod and stadia readings.

7. The difference in elevation between the old bench mark and the new bench mark, or turning point, in the case of multiple setups, is computed as the sum of the backsight reading minus the foresight reading.

If additional setups are needed, evenly split the difference between the last fore turning point— now new backsight —and the new bench mark, with the instrument, or advance no farther than 70 meters (230 feet) from the fore turning point; then reset the instrument. Advance back rod same distance ahead of instrument, within 5 meters (16.4 feet), to new fore turning point, or to the new bench mark. Ensure accumulated backsight to foresight distance imbalance is less than 10 meters (32.8 feet). Repeat steps 2 through 7, until you have reached the new bench mark. When the last setup has been observed, record the ending time, and weather conditions, e.g., temperature observed at instrument height with units, wind effects, and sun conditions during the level observations, on the recording form.

Always plan the observations between the old and new points so that the same rod is set on the starting and ending bench mark. In the case of using two rods, for leveling in a multiple setup leveling scenario, always start and end with the same rod on the bench mark, i.e., an even number of setups. This ensures any systematic error, with regards to the level rods, is canceled during the leveling observations.

8. All observations between the old and new points must be confirmed by performing double-run leveling, i.e., leveling from the old point to the new point as forward leveling and from the new point to the old point as backward leveling. For return observations, reset and re-level the instrument, even when only one turn is required. Level backward from new point to the old; in the same manner as in steps 2 through 7. The starting elevation at the new point for the backward leveling should be set to 0.0000 (zero), as the difference in elevation between the new and old points is being determined in the field.

Note: The observed elevation difference for the forward and backward leveling, between the old and new points, for 3rd Order leveling, may differ by no more than 2.0 millimeters for a one-setup section, 3.79 millimeters for multiple setup sections less than 0.10 kilometers in length, or 12 millimeters × $\sqrt{D}$, where D is the shortest one-way length of section in kilometers, for sections greater than 0.10 kilometers.

9. To compute the elevation difference from the old mark to the new, average the two elevation differences between the old mark and the new mark maintaining the sign, positive or negative, of the forward leveling from the old to the new mark. The field elevation for the new bench mark will be the average computed difference (the mean of both the forward and backward leveling) plus the published elevation of the old bench mark.

Note: The old mark should not be disturbed until observations involved in the leveling have been checked by the observer or recorder to ensure required procedures and closures have been met.

When Reference Points Are Required

If an old mark has to be removed before a new mark can be established, a series of three reference points should be set in the vicinity. Set stable points, which are unlikely to move or be damaged from the time they are set, to the time they are used to establish the elevation of the new mark. Examples of “stable” reference points are a chiseled cross in concrete or an outcrop, an anchor bolt set into concrete, a nail driven in a tree root, a stable re-bar driven in a location that will survive construction, as well as others.

Leveling should be performed so there is a separate setup between each reference point and the bench mark(s), following similar procedures (as listed in steps 2 to 9 above). A suggested sequence is as follows: observe forward and backward leveling between the old bench mark to be reset and reference point 1; observe forward and backward leveling between the old bench mark to be reset and reference point 2; and observe forward and backward leveling between the old bench mark to be reset and reference point 3, as illustrated in Figure 4. The loop should be closed by observing forward and backward leveling between reference points 1 and 2, and between reference points 2 and 3, to provide an additional check on the reference points.

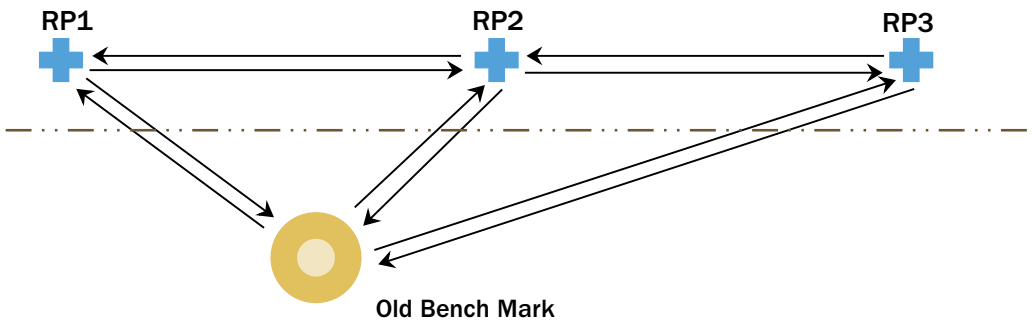

Figure 4. Old bench mark ties to three reference points.

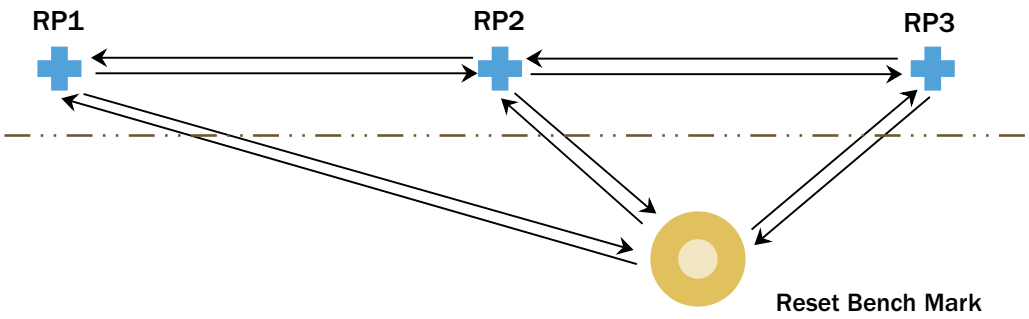

Figure 5. Three reference points tie to new reset bench mark.

A similar set of observations is obtained between each of the reference points and the new bench mark, after it has been established, as illustrated in Figure 5.

Elevation differences between reference points that differ from the original elevation differences, beyond allowable section closure tolerances, must be investigated and noted. If the old bench mark is still in existence, a direct level tie between the old and new marks can be achieved by following the previous observing sequences for optical or digital leveling equipment. If the old mark has been disturbed or destroyed, loop closure analysis should indicate which of the reference points is in question. Re-run the leveling to ensure correct high points were held and procedures were followed. Note and describe any stability issues relevant to the reference point of concern. Submit all data with a discussion of conditions which may have caused the difference in elevation for review and final determination on the acceptability of the data by NGS. It may be necessary to perform a level tie to an adjacent existing bench mark, following a minimum of 2nd Order, Class II procedures, to establish an elevation for this new bench mark in these conditions.

Destroyed Bench Marks

After the new mark has been established and leveled, and it is conclusive the old monument will be destroyed, the old disk should be removed and returned to NGS, at the address listed below for Data Submission. If the old disk cannot be returned, please describe the reason. A copy of field notes, a description of the original mark, a description of the reset mark, completed reset forms, and any remarks that seem pertinent to this action, should also be submitted.

Destroyed bench mark disks should be returned to NGS, along with the reset information requested below. NGS does not identify bench marks as destroyed in its records without definitive proof of the mark's destruction. Refer to the Mark Recovery Entry Form on the NGS Internet site for further details about submitting information about destroyed geodetic control points.

Note: If the old bench mark is in poor condition, such that the elevation may be questionable, it should be considered destroyed. No effort should be made to transfer a potentially erroneous elevation to a new replacement bench mark from a questionable bench mark in poor condition. Poor condition can be described as a leaning, loose in the ground, or deteriorated monument. Attachment A describes the procedures for establishing a new vertical control point, not a reset, in the area of a bench mark found in poor condition by performing level ties to other adjacent bench marks.

Data Review and Final Adjusted Elevations

NGS will review submitted data for conformation to guidelines, quality, and completeness. NGS will then adjust observed elevation differences and provide the final adjusted elevation and description for the new reset mark published in NGS elevation records, and made available through its database. Information about NGS, its products and services, as well as station data sheet information can be found on the NGS Internet site.

Data Submission

Before NGS will publish new reset elevations, the following must be supplied:

1. Completed station description for new mark and updated recovery note for old mark in D-file format (.dsc) using the most current version of the NGS program WinDesc. Required description information is based on the field form, "Report on Location and Description of Reset Bench Mark."

2. Completed reset leveling observations (.hgz88) and accompanying report (.rpt) files using the most current version of the NGS program Translev for observations between reset mark and existing mark(s), or reference points used to reset the mark. Required observation information is based on the field form "Observations for Relocation of Bench Mark."

2a. Include a digital copy of the leveling observations if a digital level was used for the observations.

3. Original field notes (clearly legible), digital photographs of the new mark and digital (scanned) version of a site sketch, if one was made. The destroyed old disk, or digital photographs clearly showing the old disk is destroyed, if available. If the old mark has not been destroyed at time of submission it should be so stated in the recovery note for that mark in the description file.

The previously mentioned field forms and software programs are available on the NGS Internet site

Submit paper copies of documents and reports in one report cover along with digital files copied to CD-ROM, as well as the removed disk, if possible, to the National Geodetic Survey:

Bench Mark Resets
NOAA, National Geodetic Survey, N/NGS42
Bldg. SSMC3, Room 8438
1315 East-West Highway
Silver Spring, MD 20910
Phone: 301-713-3187

Bibliography

FGCS "Specifications and Procedures to Incorporate Electronic Digital/Bar-Code Leveling Systems," Version 4.1, May 27, 2004.

FGDC "Geospatial Positioning Accuracy Standards [Parts 1, 2, 3]," October 21, 2005

FGDC "Input Format and Specifications of the National Geodetic Survey data Base, Volume I Horizontal Control Data," March, 2003

FGDC "Input Format and Specifications of the National Geodetic Survey Data Base, Volume II Vertical Control Data)," November, 1998.

Floyd, Lt. Richard P., "Geodetic Bench Marks," NOAA Manual NOS NGS 1, September 1978.

NOAA/NGS "Scope of Work for Height Modernization and LIDAR Surveys, Attachment I, Requirements for Digital Photographs of Survey Control," Version 12, July 15, 2003

Schomaker, M. Christine and Ralph Moore Berry, "Geodetic Leveling," NOAA Manual NOS NGS 3, August 1981.

Attachment A. Guidelines and Procedures to Replace a Destroyed Bench Mark along an Existing Level Line, and Maintain Original Order of Accuracy

The guidelines and procedures given below were written to provide guidance on establishing, to the same order/class, one or two bench marks along a previously leveled line of bench marks, from the remaining bench marks along that line. If a large number of bench marks in a row, along a line, are destroyed, it is required that a minimum of two or three existing bench marks, depending on the intended order and class, on each side of the destroyed bench marks be tied. Alternatively, the entire line may be re-leveled.

Following these guidelines and procedures will result in the height of the new bench mark published, to millimeters, and the accuracy will be published to the same order/class as the original line. The results will NOT be published as a 3rd Order "reset" bench mark.

Network Geometry for Replacing One or Two 1st Order Bench Marks

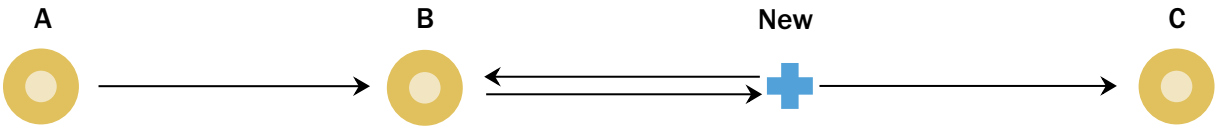

1st Order (preferred method): (A, B, and C are existing 1st Order bench marks)

A to B = single-run, must check* published difference
B to NEW = double-run, forward and backward leveling must check*
NEW to C = single-run
B to C = not directly leveled, but must check* published difference

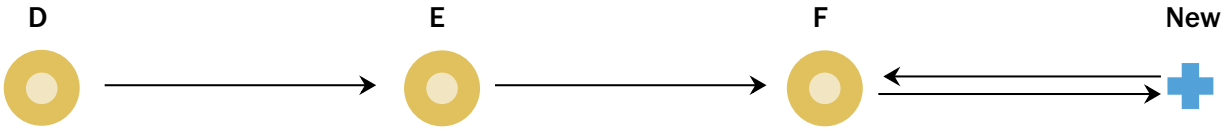

1st Order (optional method): (D, E, and F are existing 1st Order bench marks)

D to E = single-run, must check* published difference
E to F = single-run, must check* published difference
F to NEW = double-run, forward and backward leveling must check*

Note: "Check" refers to "Maximum section misclosure (millimeters)" of $4\times\sqrt{D}$, as defined for 1st Order, Class II levels; where D is shortest length of section (one-way) in kilometers, in the publication "FGCS Specifications and Procedures to Incorporate Electronic Digital/Bar-Code Leveling Systems."

Network Geometry for Replacing One or Two 2nd Order Bench Marks

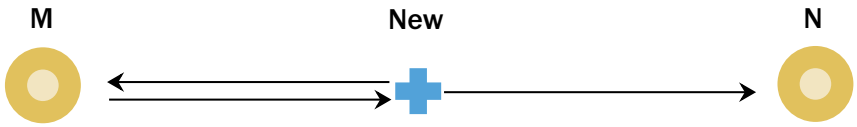

2nd Order (preferred method): (M and N are existing 2nd Order bench marks)

M to NEW = double-run, forward and backward leveling must check*
NEW to N = single-run
M to N = not directly leveled, but must check* published difference

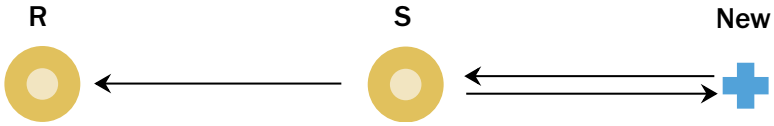

2nd Order (optional method): R and S are existing 2nd Order bench marks)

R to S = single-run, must check* published difference
S to NEW = double-run, forward and backward leveling must check*

Note: "Check" refers to "Maximum section misclosure (millimeters)" of 6×√D, as defined for 2nd Order, Class I levels and 8×√D, as defined for 2nd Order, Class II levels; where D is shortest length of section (one-way) in km, in the publication FGCS Specifications and Procedures to Incorporate Electronic Digital/Bar-Code Leveling Systems.

ADDITIONAL REQUIREMENTS WHEN SUBMITTING DATA TO NGS

1. The observations and a description for the new bench mark and recovery notes for the existing bench marks must be submitted in Blue Book format as described in FGDC Input Format and Specifications of the National Geodetic Survey Data Base, Volume II Vertical Control Data . Software programs available from the NGS Internet site, Translev (observations) and WinDesc (descriptions and recovery notes), can be used to create the data in Blue Book format.

2. The monumentation should be the same quality and type as the monumentation used on the original level line; however, the new bench mark should provide the same vertical stability or better as the previous one as described in Geodetic Bench Marks, NOAA Manual NOS NGS 1.

3. The leveling equipment and procedures used must meet the FGCS Specifications and Procedures to Incorporate Electronic Digital/Bar-Code Leveling Systems for the order/class of leveling being performed.

Attachment B. New or Replacement Survey Monuments

Typical bench mark or geodetic control disks are made of aluminum, brass, or bronze. They are about 9 centimeters (3.5 inches) in diameter, and have a domed surface to support the foot of a leveling rod, and a center point for plumbing survey equipment. Information is imprinted on its surface to identify the monument, and aid the user in obtaining data about it. This pre-cast logo is recessed, so that it does not interfere with the leveling rod, or other survey equipment. A deformed shank or stem, about 7.0 centimeters (2.5 inches) long, is cast with, or otherwise attached to the bottom surface of the disk, to help prevent the disk from being rotated or dislodged.

SITE SELECTION

Even though the reset bench mark must remain within the general proximity of the original monument, considerations for selecting an appropriate site for the replacement monument must be addressed. Select a secure location that might provide natural protection, such as one well away from a highway surface, near the edge of the right-of-way. Provide for monument stability, both vertically and horizontally, by selecting a location that reduces the influence from ground and soil movement. Avoid settings in low, potentially wet areas, slopes, and all earth-fill situations. Crests of hills are generally good locations for bench marks, as they reduce influence of frost heave; and the consistency of soil tends to be firmer. Ensure usefulness by selecting a location that is readily accessible, and safe for users. Select a site with good, unobstructed horizons so the bench mark can be used with satellite-based positioning systems if possible. Always obtain the site owner's permission prior to any work on the site.

Figure B - 1. Brass disk, front and side view.

Caution: Always confirm status of buried utilities prior to digging monument holes, by contacting local utility companies or a buried utility location service.

CONCRETE MONUMENT

1. Monument Design. A concrete monument should be poured-in-place in a hole, dug in the ground; cylindrical or squared in appearance; and slightly "bell-shaped," or wider at the bottom. The monument must extend well below the frost line; typically 1.3 meters (4 feet) deep and 0.3 meters (1 foot) in diameter. Local ground conditions, such as hard soil types with subsurface rock, may prohibit desired monument depth; whereas, softer, sandy soil types may require slightly deeper monuments to assure stability. Avoid setting concrete monuments in areas affected by sliding or other potential movement, such as in slopes and all earth-fill situations.

2. Station Designation. Stamp the station designation and setting year on the top surface of the disk prior to setting.

3. Digging the Hole. The hole is generally dug with an auger or post-hole digger (bell-shaped, or wider at the bottom), then backfilled with concrete mix. The bottom of the hole is enlarged about 0.1 meters (0.4 feet) in radius, tapering upward for 0.4 meters (1.4 feet), in order to make the bottom of the monument bell-shaped (to help keep the monument stable). Care should be taken to avoid creating any shoulders or mushrooming effect near the top of the monument, which might afford opportunity for frost heave or surface soil action to move the monument. A cylindrical form, such as rolled black tar paper (felt paper) or a cardboard form, placed at the top of the hole and extending about 0.4 meters (1.4 feet) deep will create a round shape and help support the upper portion of the concrete monument until the cement cures. A smooth surface near the top of the monument is less susceptible to damage by frost or other forces, than unfinished tops.

4. Concrete Ingredients. The quality of the ingredients and their proportions help determine how dense and impervious the cured concrete will be. The ingredients include aggre-

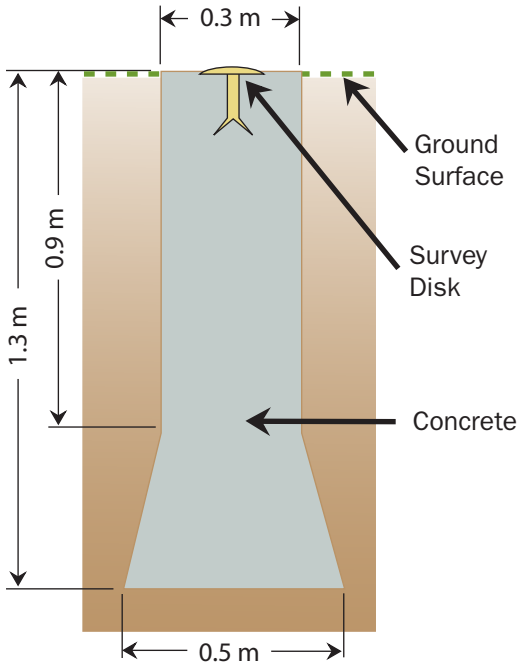

Figure B - 2. Schematic of concrete monument.

gate, cement, and water. Aggregate should be clean (free from silt and clay, harmful chemicals, and organic matter) and well graded, i.e., contain proportionate amounts of many particle sizes. In specifying mix proportions, the aggregate is usually divided into two parts: sand (particle size less than 4 millimeters) and gravel (particle size greater than 4 millimeters). Both parts should be well graded. Aggregates that are porous, split easily, or are otherwise weak or permeable, result in poor concrete. Examples of poor aggregate include shale, claystone, sandstone, and micaceous rocks.

Varying sized bags of pre-mix concrete are readily available, and work well for setting concrete monuments. When using pre-mix concrete, ensure that the aggregate is well graded. Additional Portland cement and/or sand, typically a half shovelful per 60-pound bag, can be added to improve consistency and quality of the finished monument. A typical concrete monument setting requires 8 to 10, 60-pound bags of concrete mix, depending on the size of the hole.

The water used in concrete mix should be relatively free of impurities; such as acids, alkalis, salts, oil, organic matter, and silt. Impurities can decrease the strength and durability of cured concrete. As a rule, do not use water that you would not drink.

5. Mixing and Placing. Suitable proportions (by bulk volume) of cement, to sand, to gravel are 1:2:3. If the gravel is made up of fragmented or angular particles, use a little less gravel and, proportionately, more sand. Add only enough water to make the mix workable. About half the water added to the mix is used in the chemical reaction (hydration) that causes the paste to harden into binder. If too little water is used, however, the mix will not compact properly and spaces will be left in the mass. A good indication of the right amount of water is that the mix neither runs nor falls off the shovel, but sluggishly slides off and flattens upon hitting the ground.

Fresh concrete must be well mixed before placed, otherwise the minute particles of cement will not be sufficiently wet, and the aggregate will not be completely coated with paste. Before placement, the hole should be damp, so the moisture will not be drawn from the fresh concrete into the surrounding soil. In no case should it be so wet as to be muddy. Segregation of the various sizes of aggregate should not be much of a problem when pouring concrete survey monuments. However, be aware that segregation can occur, and is undesirable when it does. Continuously tamp the mix into a compact mass, while filling the hole, so it becomes less pervious and, consequently, more durable. Some bleeding (water gain at the surface) is to be expected when finishing the mark. Excessive bleeding indicates too much water in the mix or poor gradation of aggregate.

Note: Pour the entire concrete monument in a single setting to ensure a solid stable monument. Allowing a pour surface to partially dry, or cure, between consecutive pours creates a weakness in the concrete.

6. Finishing Monument and Setting the Disk. After pouring concrete and tamping to settle and remove voids, the top of the monument is smoothed off and slightly beveled with a trowel. The top of the finished monument should be flush with the ground, or slightly recessed for protection from

mowers, etc. Wet and clean the disk by rubbing all surfaces with cement, to remove unwanted dirt and oils; rinse well. Fill underside of disk with cement, using a trowel. Hold disk loosely upside-down by end of the shank then gently tap domed surface of disk from below, with the handle of the trowel, several times, to allow cement to settle and trapped air to escape. This process is very important, because it will minimize the existence of highly undesirable voids under the disk once in place. Carefully turn the disk over so as not to dislodge the under-disk cement and press the disk stem into the top center of the monument until the rim of the disk touches the concrete. The disk is typically oriented to read with the observer facing north. This is useful for GPS and gravity observations, which orient to north. Lightly press and tap the disk into the top of the concrete monument until the concrete slightly overlaps the edges of the disk which helps protect the disk. Once the disk is in place, finish the top of the monument by smoothing with the trowel.

7. Clean Up. Excess concrete is cleaned from the surface of the disk after installing. Excess dirt and trash are removed, and the site is returned to its "as-found" condition. The bench mark is the only evidence left to represent the quality of work performed, and therefore the cleanliness of the site should reflect similar quality.

Caution: Lime and/or cement in concrete can cause burns on skin and destroy clothing. Water used to rinse tools, concrete/cement mixing containers, etc., can kill vegetation if dumped on the ground.

8. Curing Concrete. Concrete should be covered for several days after it is placed. This prevents rain from making the mix too wet, and ruining the finished surface. It also prevents the surface from drying too rapidly, leaving too little water for complete hydration, as well as concealing the disk from people who might tamper with it at this vulnerable stage. A piece of wood, cardboard, heavy paper, or similar item should suffice for covering the mark, and should be removed after cement has cured.

9. Cold Weather Precautions. Frozen fresh concrete has a damaging effect, because expansion of water as it freezes separates solid particles in the mix. This reduces the strength of the bond and makes the concrete more porous and less durable. Three protective measures should be taken in cold weather; either singly or in combination. First, use warm ingredients; the first 24 hours after a mix has been placed, it develops little heat of its own to prevent freezing. After 24 hours some heat is developed, as a product of the chemical reactions occurring in the mix. The use of warm ingredients is especially beneficial during the first 24 hours. To keep the aggregate and cement warm, store them indoors and keep them in a heated vehicle until they are mixed.

Second, use Type III (high-early-strength) cement or special additives, such as calcium chloride, which speeds curing. The calcium chloride should be dissolved in the mixing water, instead of mixing it with other ingredients. If a large number of concrete marks are being installed, by mass production, using a "ready-mix" contractor, fast-curing additives should not be added until the concrete is delivered on site.

Third, insulate the finished mark for a week after the concrete is poured. One method is to cover the mark with boards, resting on supports. Cover with paper or plastic, then add a layer of straw, Styrofoam, or similar insulating material, about 0.15 meters (0.5 feet) thick, and finally a layer of soil 0.15- to 0.3 meters (0.5- to 1.0 feet) thick. Pile snow loosely on top, if available.

SURVEY DISK SET IN BEDROCK OR STRUCTURE

Sound bedrock is the most desirable setting for vertical control points. Besides the ease and cost effectiveness with which a disk can be installed, bedrock provides the most stable setting in terms of both crustal motion and disturbances inflicted by people. Always use bedrock when a suitable outcrop exists. As a rule of thumb, bedrock is considered potentially good, if the distance between natural joints and fissures is greater than 1 meter (3.0 feet).

1. Station Designation. Stamp the station designation and setting year on the top surface of the disk, prior to setting.

2. Site Selection. Pick a fairly level and accessible spot on the outcrop, that appears intact with the bulk of the rock. A simple test can be performed to help determine the condition and integrity of the rock by placing one's hand near the area the disk will be set, then striking the outcrop with a moderately heavy hammer, and feeling for vibration. Sound

outcrop will force the hammer to rebound with each impact and vibration through the rock should be minimal. Avoid rock that sounds hollow from this test.

3. Drilling the Hole. Drill a 2.5 centimeters (1 inch) diameter hole, about 8 centimeters (3 inches) deep into the bedrock. Chisel a flat, level recessed area around the top of the hole, to a diameter slightly larger than the disk. Test the hole with the disk to see if it is deep enough, and the disk sits flush in the chiseled area.

When installation is completed, the top surface of the disk should sit level and slightly below the surface of surrounding rock, to help protect the disk. Chisel a drain channel through the low edge of the chiseled recess, to allow water to drain away from finished mark.

Caution: Protective eye-wear should be worn when drilling into bedrock or masonry.

4. Mixing Cement. Remove all rock powder and debris from the hole and recessed area. Flush and fill the hole with clean water; then pour dry cement into it. Mix ingredients right in the hole with a thin stick or other implement such as a screw-driver. Add water and cement to make enough mortar/cement to fill hole, with a little extra available to place on the underside of the disk. When the mortar is completely mixed, it should be thick, but still workable, like heavy mashed potatoes.

5. Preparing the Disk. Wet and clean the disk by rubbing all surfaces with cement, to remove unwanted dirt and oils; rinse well. Fill underside of disk with mortar, using a trowel. Hold disk loosely upside-down by end of the shank then gently tap domed surface of disk from below, with the handle of the trowel, several times, to allow mortar to settle and trapped air to escape. This process is very important, because it will minimize the existence of highly undesirable voids under the disk once in place.

6. Setting the Disk. Place the shank of the disk into the cement-filled hole and press the mark firmly into place. The disk is typically oriented to read with the observer facing north. This is useful for GPS and gravity observations, which orient to north. Slightly twist the disk back-and-forth and gently tap it with the end of the trowel handle, to help settle the disk, completely and evenly, into the recess in the bedrock. The disk is considered set when the slight back-and-forth movement stops and the disk settles firmly in place. Work excess mortar around the outer edge of the disk, making sure that it is smooth, and slightly overlaps the top, edges of the disk. An exposed disk edge could provide

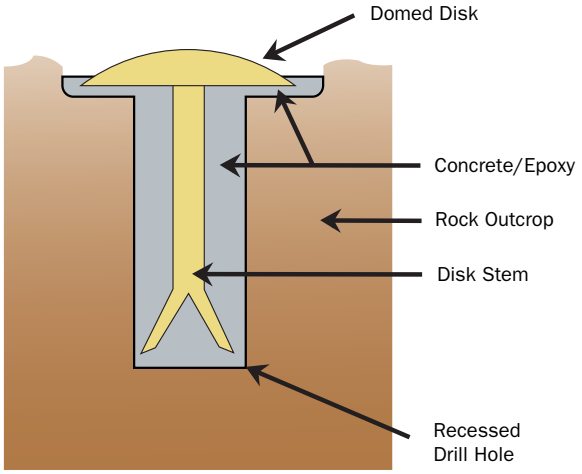

Figure B - 3. Side view of disk in outcrop.

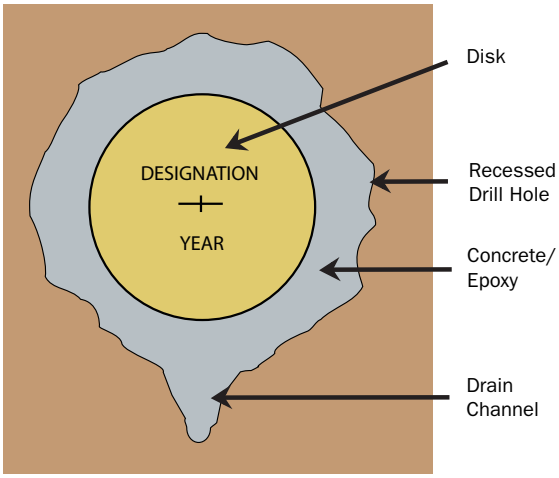

Figure B - 4. Top view of disk in outcrop.

a weak spot that can be used by someone, or the elements, to dislodge the mark.

7. Cleaning and Finishing. Sprinkle a little dry cement on the exposed surface of the disk, and then rub it with a clean rag or short bristled brush, using circular strokes. This cleans the disk and removes excess mortar from its surface and recessed letters. Rubbing the wet mortar around the edge of the disk in the same manner is done intentionally to finish its surface and help prevent cracking. Brush away loose cement and make sure the finished product has a neat appearance.

8. Curing Cement. Cover the newly set disk while the cement is still wet, to prevent heavy rains or other debris from ruining its surface; and to conceal the disk from people who might tamper with it at this vulnerable stage. A piece of wood, cardboard, heavy paper, or similar item should suffice for covering the mark, and should be removed after cement has cured.

9. Clean Up. The area is cleaned; excess dirt and trash removed; and returned to its "as-found" condition. The bench mark is the only evidence left to represent the quality of work performed, and therefore the cleanliness of the site should reflect similar quality.

Caution: Lime and/or cement in concrete can cause burns on skin and destroy clothing. Water used to rinse tools, concrete/cement mixing containers, etc., can kill vegetation, if dumped on the ground.

SURVEY DISK IN STRUCTURE

The procedure for setting a disk in a concrete or masonry structure is identical to that for setting one in bedrock.

Caution: Use protective eye-wear when drilling into masonry or concrete.

Stability and safety issues are also concerns when setting a disk in small structures such as bridges. Select locations with continuous, deep foundations such as head walls, and avoid locations such as curbs, sidewalks, bridge decks, and railings.

When drilling into brick or other soft material, an electric drill or hammer and star drill should be used, rather than heavy power equipment, to prevent potential damage to the exterior. Recess the chiseled depression for the disk so the top of the disk, when set, is flush with surrounding structure. This will eliminate the need for a chiseled drain, as described for the disk in outcrop.

The hole should be flushed with water, and wet before mortar is put into it to remove dusty surfaces and aid bonding. After placing the shank of the disk into the mortar filled hole, work it to the bottom edge of the hole, as described in Step 6, so that it will not settle askew while the mortar is curing.

Highway grade epoxy may be used in place of cement, if it meets ultraviolet standards and will hold up to "all" weather conditions. Setting procedures with epoxy are similar to those described previously, except the drilled hole, though needing to be extremely clean, cannot be wet.

NGS 3-D DEEP DRIVEN ROD MARK

The recommended survey marker that produces stability for most conditions is the three-dimensional (3-D) drivable survey monument. The principal component of this monument is a 17 millimeter (9/16 inch) diameter, stainless steel rod driven into the ground, using a gasoline powered reciprocating hammer, until refusal or a reduced driving rate has been achieved. The rounded top center of the rod is the survey datum point. The upper 1.0 meter (3 feet) of the rod is encased in a 2.5 centimeter (1 inch) grease filled PVC or plastic extruded fin sleeve that is held horizontally stable by the surrounding, back-filled, washed sand. Effects of up and down ground movement during freeze/thaw or wet/dry conditions are buffered from the anchored rod by the grease filled sleeve promoting vertical stability. A 12.7 or 15.2 centimeter (5 or 6 inch) PVC pipe with attached standard aluminum hinged logo cap protects and identifies the top of the monument.

Time required setting an average 3-D rod mark using the following procedures and referencing Figure B-4 is 2 to 3 hours. Photo documentation of setting a 3-D rod mark can be found on the NGS Internet site.

A. EQUIPMENT REQUIRED TO SET MONUMENTS:

ROD DRIVERS AND ACCESSORIES

Qty	Description	Notes
1	Pneumatic Rod Driver	Use these, or something similar: a) Whacker Model BHB 25 (with tool kit) b) Pionjar Model 120 (with tool kit) c) Cobra Combi (with tool kit)
1	Rod Driving Insert	Holds machine on rod and acts as impact point while driving rods
1	Shovel Bit (optional)	For machine to help start and dig holes
1 Pint	Required Oil Type and Calibrated Container	For determining gas/oil mix
2	Gasoline Containers with Gasoline	For fueling the rod driving machine and generator

DIGGING THE HOLE

Qty	Description	Notes
1	Post Hole Digger	Capable of digging a hole 4-feet deep
1	Gas Powered Post Hole Digger with Augers (optional)	For increased productivity
1	Digging Bar	For dislodging rocks and hard packed soil

DRIVING THE ROD

Qty	Description	Notes
1	2 lb. Hammer	To start rods and stamp designations
2	Wrenches/Grips	For attaching rods together. Use either of these: a) 8” to 10” Quality Pipe Wrenches b) Quality Vise Grips

FINISHING THE ROD

Qty	Description	Notes
1	Hack Saw + Extra Blades	For cutting stainless steel rod
1	4” or 5” Grinder	Use electric or battery powered. For cutting and finishing off top of rod.
1	Gas Powered Electric Generator	For powering grinder and drill
2	Sanding Disks (medium grade), Metal Cutting Disks	For use with the grinder
1	Steel File	For fine finishing off the rod
1	Centering Sleeve	To aid in center punching mark on rod top
1	Center Punch	To punch mark on rod top
Var	Sandpaper or Sanding Pad	For fine finishing rod top

FINISHING THE MONUMENT

Qty	Description	Notes
1	¼" Stamping Set	For lettering and numbering station designation/date
1	Hand Saw	For cutting 5 or 6-inch PVC pipe
1	Bucket or Wheelbarrow	For mixing cement and moving unwanted dirt
2	5 Gallon Water Containers and Water	For mixing cement and cleaning equipment
1	Hoe or Sharp Shooter Shovel	For mixing cement
1	Heavy Rubber Mallet	To aid lowering logo cap and PVC pipe into cement
1	Cement Finishing Trowel	For smoothing concrete top
1	Stiff Vegetable Type Brush	For cleaning logo cap and hinges

ASSORTED ACCESSORIES

Qty	Description	Notes
1	Tool Box with standard tools	For incidental repairs. Should include, at the least: Slotted and Phillips Head Screw-Drivers, Pliers, Needle Nose Pliers, Wire Cutters, Assorted Wrenches, Sockets, Allen Wrenches, Wire Brush
1	Round Nose Shovel	For helping dig hole
1	Tile Spade	For digging hole and mixing cement. Also known as a "Sharp Shooter Shovel"
1 Roll	Black Tar Paper (Felt Paper)	For making cylindrical form for top of monument
1	30 Meter Tape Measure	For various measurements
1 Pair	Leather or Cotton Work Gloves	For hand protection especially while working with cement
1 Pair	Protective Eyewear	For eye protection especially during operation of machinery
1 Pair	Hearing Protection Devices,	For hearing protection especially during operation of machinery Ear Plugs or Ear Muffs
Var	Rags / Paper Towels	For general cleanup

B. MATERIALS REQUIRED TO CONSTRUCT EACH MARK:

Qty	Description	Notes
23	9/16" Internally-threaded Stainless Steel Rods each 4-feet long	See section C, step 8. This allows a maximum depth of 92 feet.
1	4 to 5 inch piece of Stainless Steel Rod	To serve as impact point protection while driving rods
25	3/8" Threaded Stainless Steel Studs	One per rod section, plus spares
1	Steel, Fluted Spiral Rod Entry Point	Standard Order
1	Aluminum Hinged Logo Cap	Standard Order
1	Schedule 40 PVC Pipe, 5" or 6" diameter, 20 inches long	Fits hinged logo cap
1	Sleeve Apparatus Kit (see notes)	Use either: a) One (1) schedule 40 PVC pipe, 1" diameter and at least 3 feet long with two (2) plastic end cap alignment bushings, center drilled to 9/16" b) One (1) plastic extruded fin sleeve, 1" diameter and at least 3 feet long with two (2) plastic end cap alignment bushings, center drilled to 9/16" (extruded fin sleeve)
1 Pint	PVC Cement or Epoxy	Ensure cement or epoxy adheres plastic pipe or sleeve
1 Pint	PVC Cleaning Solvent	Only if using PVC Cement
1	Grease Gun	Fills 1" grease filled sleeve
1 Tube	Food Grade, Non-Toxic Grease	Often comes in 17 ounce tubes. Use tubes which fit the grease gun.
1 cubic foot	Bagged Concrete Mix	Depends on size of hole
2 lbs	Portland Cement	If necessary, is used to enhance integrity of ready mix concrete
½ cubic feet	Washed Sand	Fills bottom of hole, inside PVC pipe, around grease filled sleeve

C. SETTING PROCEDURES

1. Logo Cap and PVC Pipe. Stamp station designation and year of establishment in proper location on logo cap. Cut a 0.5 meter (20 inch) long section of 12.7 or 15.2 centimeter (5 or 6 inch) diameter PVC pipe. Glue previously stamped aluminum hinged logo cap to one end of the pipe with solvent cement formulated for PVC or epoxy.

2. Digging the Hole. Using a power auger or post hole digger, drill or dig a round hole in the ground 0.3 to 0.35 meters (12 to 14 inches) in diameter and approximately 0.6 meters (22 inches) deep. Care should be taken to avoid a "mushroom" affect at the top of the hole during this digging process. If the top of the hole becomes irregular during the mark setting process, a round form to support the top of the concrete should be used (see step 13). Extend the center of the bottom of the hole by drilling or digging an 8 to 15 centimeters (3 to 6 inches) diameter hole an additional 0.5 meters (20 inches) deep for a total depth of 1.1 meters (42 inches). This extended area will be back-filled with washed sand around the grease filled sleeve.

3. Preparing Grease Filled Sleeve. Drill 17 millimeters (9/16 inch) holes in the two 2.5 centimeter (1 inch) PVC end caps. Ensure the drilled holes slide over and provide a snug fit around the stainless steel rod. Glue both end caps on a 0.9 meter (3.0 feet) length of PVC pipe creating the sleeve, or glue plastic end cap alignment bushings on a 0.9 meter (3 feet) long section of the plastic, extruded fin sleeve. Let glued ends dry completely. Pump food grade grease into capped sleeve until 3/4 full allowing for displacement by rod and completing the grease filled sleeve. Place grease filled sleeve into center of the lowest portion of the hole measuring for depth. The top should be about 16 centimeters (6 inches) below the ground surface. Remove the grease filled sleeve and set aside while continuing with the next steps.

4. Preparing Rods. Using a standard 11 millimeters (3/8 inch) threaded stud, attach two 1.2 meters (4 feet) long sections of stainless steel rods together. At one end, attach a standard spiral (fluted) rod entry point with an 11 millimeters (3/8 inch) threaded stud. On the opposite end attach a short 10 to 12 centimeters (4 to 5 inches) long piece of rod with a 11 millimeters (3/8 inch) threaded stud that will be used as the impact point while driving the rods. Tighten all connections using two pipe wrenches a good 1/4 to 1/3 turn past the point of contact of all rod ends except for the impact point which will be continually removed. This tightening requires a certain "feel" that ensures the rod ends are seated together with the greatest possible tension yet not to the point of breaking a stud. Rods tightened in this fashion should not vibrate loose when driven into the ground.

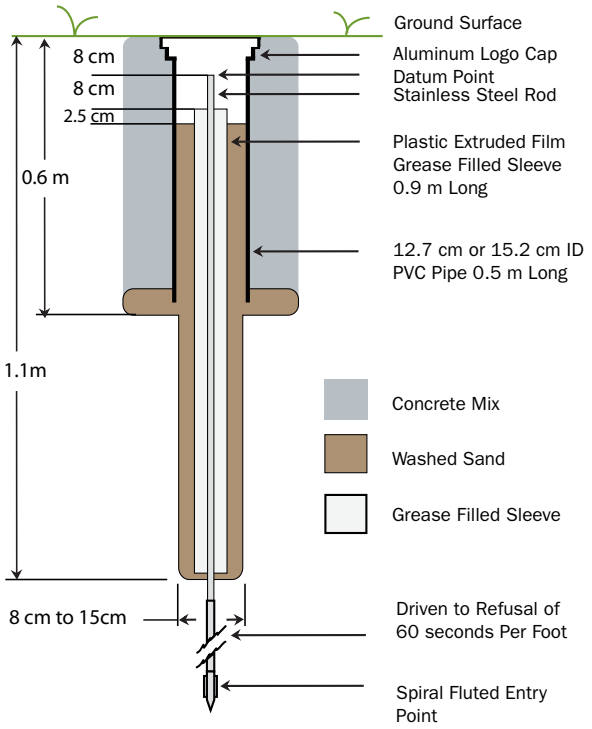

Figure B - 5. Schematic of NGS 3-D rod mark.

5. Driving the Rods. The 2.4 meters (8 feet) length of connected rod is centered into the bottom of the hole and driven with a 2-pound hammer until the rod is secure and as straight up and down (plumb) as possible. Usually 0.6 to 0.9 meters (2 to 3 feet) remain protruding above the hole. Drive remaining section of rod to about the top of the hole with a gas powered reciprocating driver such as Whacker model BHB 25, Pionjar model 120, Cobra Combi, or another

machine with an equivalent weight (55 or more pounds) and driving force (24 joule or 17.7 Foot-Pounds).

6. Adding Rods. Remove the short piece of rod (impact point) leaving the threaded stud in the section of rod in the ground. Attach another 1.2 meters (4 feet) long section of rod and, using a new threaded stud, thread on the impact point. This "cycling" of a new stud from impact point into top of the rods in the ground insures the integrity of the studs at all connections. Tighten securely using pipe wrenches as described above in step 4. Always tighten rods maintaining a clockwise pressure to avoid loosening the rods already in the ground. Drive the new length of rod into the ground with the reciprocating driver.

7. Achieving Required Rod Depth. Repeat step 6 until the rod refuses to drive further, known as anchored, or until a driving rate of 60 seconds per foot is achieved, i.e., it takes 60 seconds to drive 0.3 meter (1.0 foot) of rod into the ground. In the event the driven rods will not sufficiently slow down to meet desired driving rate, terminate upon reaching 27.4 meters (90 feet) or 22.5 rods. This leaves about 0.6 meter (2 feet) of rod out of the hole. If possible, leave the driven rods alone overnight to let them set up or adhere to the soil. Return the following day and drive remaining 0.6 meter (2 feet) of rod and determine whether driving rate has reduced. If rod feels secure in ground, i.e., will not rotate, use this depth even though the minimum driving rate of 60 seconds per foot has not been met. If the rod is still unsecured, turns freely in clockwise direction, a decision must be made considering further expense for the monument. Sometimes, all that is necessary to achieve a well anchored rod is driving it a few more feet. Unfortunately, in other instances, an additional hundred feet or more may be required to anchor the rods. Only rods driven to refusal or to which met the slow driving rate will be accepted for resets. Indicate in the written station description the depth of the rod and whether it was driven to refusal or met the slow driving rate. Also include a description of any unusual mark setting circumstances.

8. Finishing the Datum Point. When refusal or prescribed driving rate is reached, cut off the rod with a hacksaw or comparable tool, always removing at least the tapped and threaded portion, and leaving the top of rod about 8 centimeters (3 inches) below ground surface. Shape the top of the rod to a smooth, hemispherical surface using a portable grinding machine with a grinding attachment or sanding wheels, files and sand paper to produce a nicely finished, rounded surface. This is the datum surface and ragged edges or grinding marks are not acceptable on top of the finished rod.

9. Applying the Center Punch. The datum point must then be created by center punching a dimple on top of the rod to provide a plumbing (centering) point. Place the centering sleeve over the top of the rounded rod to facilitate locating the exact center of the rod. Punch a substantial dimple, 1.5 millimeters (1/16 inch) deep, into the top of the rod using a punch and hammer or spring loaded center punch. Several blows may be needed to create a sufficient dimple. Remember, this is the actual survey point, so don't hesitate to spend a few extra minutes to produce a professional, finished product.

10. Installing Grease Filled Sleeve. Insert the grease filled sleeve, produced in step 3, over the rod with the unfilled portion at the top. The upper end of sleeve will fill as rod displaces grease from the bottom. The datum point on top of rod should protrude through top of the sleeve about 8 centimeters (3 inches) with sleeve extending to the bottom of the hole.

11. Back-Filling with Clean Sand. Back-fill and pack the bottom 0.6 meter (24 inches) or more of the hole with washed sand around the outside of grease filled sleeve. This fills the bottom of the hole and helps stabilize the sleeve.

12. Placing Logo Cap and PVC Pipe. Place the 12.7 or 15.2 centimeter (5 or 6 inch) diameter PVC pipe and logo cap over and around the grease filled sleeve and rod in the center of the hole. The bottom of the PVC pipe should extend into the top of the sand in the bottom of the hole. Leave the top of the logo cap and PVC pipe slightly higher than the top of the ground surface until the concrete is in place. Back-fill the center of the PVC pipe with washed sand around and to within 2.5 centimeters (1 inch) from the top of the grease filled sleeve. The rod should be centered in the PVC pipe.

13. Adding the Concrete Collar. Mix concrete in a bucket or wheel barrel to pasty, well moistened consistency like mashed potatoes. Add Portland cement, if necessary, in sufficient quantity (1 to 2 pounds) to enhance the concrete mix or to help dry an over moistened mixture to produce an adequate consistency. A good indication of adequate consistency is that the mix neither runs nor falls off the shovel but sluggishly slides off and flattens upon hitting the ground. Pour concrete into the hole around logo cap and PVC pipe filling to about the ground surface. A round form made from black tar paper (felt paper) can be inserted during this filling process to create a round top for the monument. Open the logo cap and grasp the PVC pipe then shake to settle concrete around the pipe and to fill voids. Add more concrete to fill to within 1 centimeter (½ inch) of the ground surface.

14. Finishing the Top of the Concrete. Trowel the top of concrete to a smooth, fairly finished surface. Tap alternate edges of the logo cap, using a rubber mallet or hammer and wooden block, lowering it and attached PVC pipe into surface of concrete. Finish the top of the concrete by troweling a smooth, finished surface, round in appearance with the logo cap fairly centered.

15. Finishing the Mark. Add sand to the inside of the PVC pipe to bring its level to within 2.5 centimeters (1 inch) of the top of the grease filled sleeve. Clean any overlapping concrete from the surface of the logo cap using a stiff bristled brush. The finished height of logo cap and access cover should be slightly lower than the surface of the ground. The logo cap should be approximately in the center of the top of the concrete. Datum point should be about 8 centimeters (3 inches) below the cover of the logo cap and centered in the 12.7 or 15.2 centimeter (5 or 6 inch) diameter PVC pipe. The top of the grease filled sleeve should be about 8 centimeters (3 inches) below the datum point and the washed sand 2.5 centimeters (1 inch) below top of the sleeve. Clean any cement that may have gotten onto the exposed rod or datum point.

16. Clean Up. Clean all equipment and remove all debris such as extra cement, excess dirt, and trash leaving the area in the condition it was found. Remove excess grease and insure that the datum point is clean.

Attachment C. Written Station Descriptions and Digital Photographs

Written station descriptions should be concise, accurate, informative documents that enhance recovery of survey monuments. Standardized forms for writing descriptions ensure that pertinent station information is recorded completely and consistently while at the survey monument site. This reduces errors and omissions that occur when writing station descriptions from memory. See downloadable (from NGS) “Report on Relocation and Description of Reset Bench Mark” form.

Clear digital photographs of the disk should be provided which confirm agency information, disk size and type, and designation stamping as well as the condition of the mark and local surroundings. Legible pencil rubbings of the disk are acceptable in the event a clear digital photograph is not possible.

In general, written descriptions are comprised of four elements: a standardized descriptive heading, three paragraphs of text including a description of physical monument, a “to reach” narrative and permanent station reference objects with measurements therefrom.

1. Description Headings. Station description headings identify the survey monument. This heading facilitates cataloging and referencing descriptive information by the establishing agency and for others wishing to use the monument. This information includes the station designation, station identification stamping, type of monument and/or datum point, approximate latitude, longitude, elevation, and county of location, agency and date of establishment, and other pertinent data.

2. Description of Physical Monument. Text for a station description should begin with general comments consisting of a brief, approximate discussion of station site location, monument type, and setting style. This helps pinpoint the station’s location on a map and assists surveyors unfamiliar with the area. General comments include airline distances and directions from nearest towns or prominent landmarks, and a general statement about immediate area, such as “on top of the east end of a long highway cut.” A detailed description accurately describes the monument and prepares the surveyor for the type of monument expected at the site. Examples include: “The station is a 9 centimeter diameter brass NGS bench mark disk set in top of a 0.3 meters round concrete

monument 1.3 meters deep and projecting 5.0 centimeters above the ground," or "The station is the top center of a stainless steel rod recessed 80 millimeters below ground driven to refusal at a depth of 7.5 meters encased in a 0.12 meters PVC pipe with standard logo cap surrounded by concrete and flush with the ground.". Also include digital photographs of both a close-up of the mark itself, and a wider field shot of the locality surrounding the mark.

Property ownership information should be included as the last sentence for all general comment paragraphs. Ownership information, such as owner's name and address, or a comment such as "on state highway right-of-way", facilitates station access.

3. "To Reach" Narrative. Reaching the station by vehicle or other means is described in detail in the "to reach" narrative. Begin narrative at an easily located starting reference point, such as a prominent highway junction, post office, or courthouse (sometimes post offices and courthouses are harder to find than the mark, so judgment must be used). Direct the reader from the starting point with routes and described mileages, including cross-references such as road intersections, to the station site. Describe each turn, route followed, and distance traveled. Vehicle mileage, accurate to the tenth of a mile, is obtained from a vehicle's odometer and directions are determined from good maps or compass headings.

Important information regarding a station's location will not be omitted if consistent writing style is maintained for all descriptions. After initial starting point of the "to reach" is described, each new sentence should be written in the following format: go, continue, or turn; in what direction; on what road; for what distance; to what point, e.g., "Continue northwest on State Highway 22 for 2.3 km (1.4 mi) to the station on the left."

4. Permanent Station Reference Objects with Measurements. The third and final paragraph of the station description identifies exact measurements from described reference objects.

List at least three permanent reference objects with distances and directions from the station in each description. Objects measured from varying directions to station sites are essential for locating a buried monument or to help verify that it has been disturbed or destroyed. More than three measurements and references may be included as this may benefit in the event that one or more are lost through time. Exact measurements to the hundredth of a meter (centimeter), or tenth of a foot, and accurate compass derived directions save time when searching or digging for hidden or buried monuments.

Reference items such as numbered power poles, top center of culvert pipe ends, concrete head walls and wing walls, permanent fence corners and road center lines are long lasting and easily identified.

Record all distances and measurements with proper unit annotations. If both English and metric units are desired, record one within parentheses following the other measurements, again noting associated unit annotations.

Metal or fiberglass witness posts have been set near many bench marks. If one of these witness posts is near the mark to be relocated, it should be moved or replaced, if possible, to a location near the new mark. A statement of the distance and direction from witness post to new mark should be included in description.

Finally, as an additional measure to aid in relocating the bench mark, a simple position computed from a non-geodetic ("handheld") Global Navigation Satellite System (GNSS) unit may be entered. Even with meters of potential inaccuracy, such a position will assist significantly in relocating lost marks in areas where reference points may be destroyed.

5. Digital Photographs. Digital photographs are useful for station (mark) reconnaissance, mark recovery, mark stability assessment, quality control, and as an aid during data processing and data verification. Generally three photographs per station will be stored in the NGS database, which will make them accessible to future users. The three photographs are described as numbers: (1) extreme close-up, clearly legible, (2) eye-level (5 to 6 feet distant), and (3) horizontal view (approximately 10 to 30 feet distant). All three photographs require a digital caption and the correct file name. The picture filename should be the station designation, dash, photo number, dash, date, dot, jpg, e.g., M 123 RESET-1-15JUN2006.jpg. Refer to the requirements for the submission of digital photographs on the NGS Internet site for complete details.