TYPICAL SECTION ALTERNATIVES

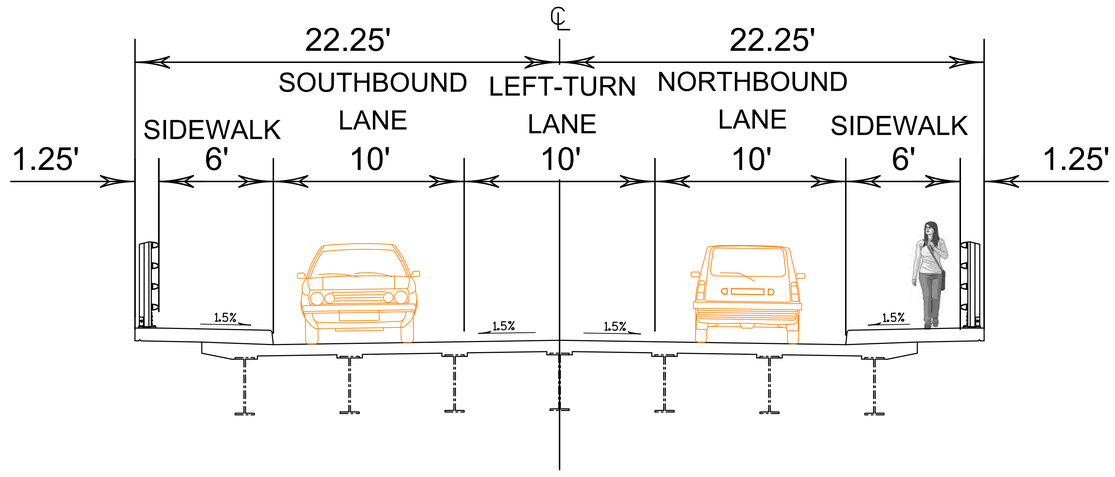

EXISTING TYPICAL SECTION
RACINE STREET BRIDGE*

*TYPICAL SECTIONS FOR APPROACH SPANS SHOWN

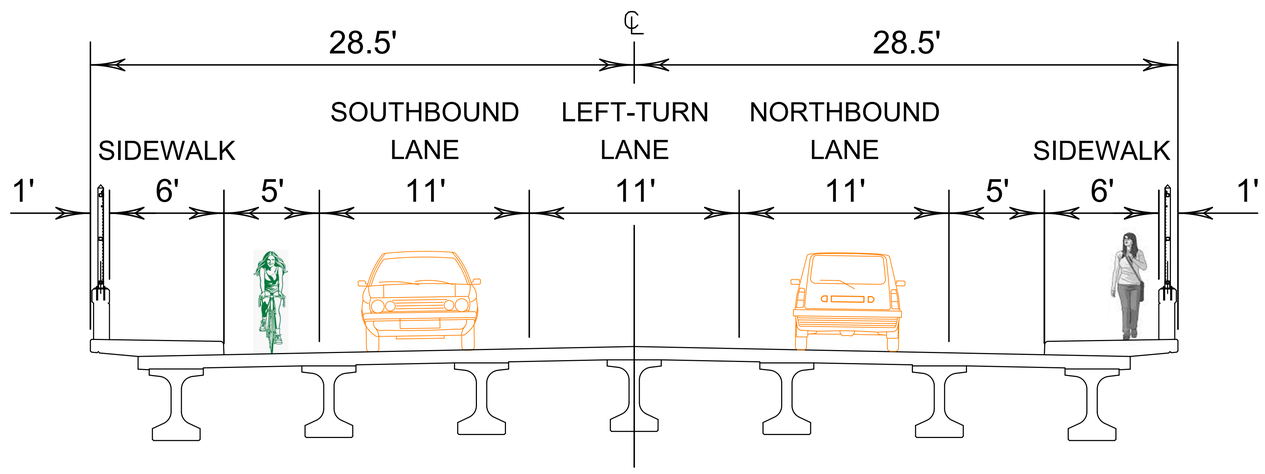

3-LANE SECTION
FOR REPLACEMENT ALTERNATIVES WITHOUT ROUNDABOUTS

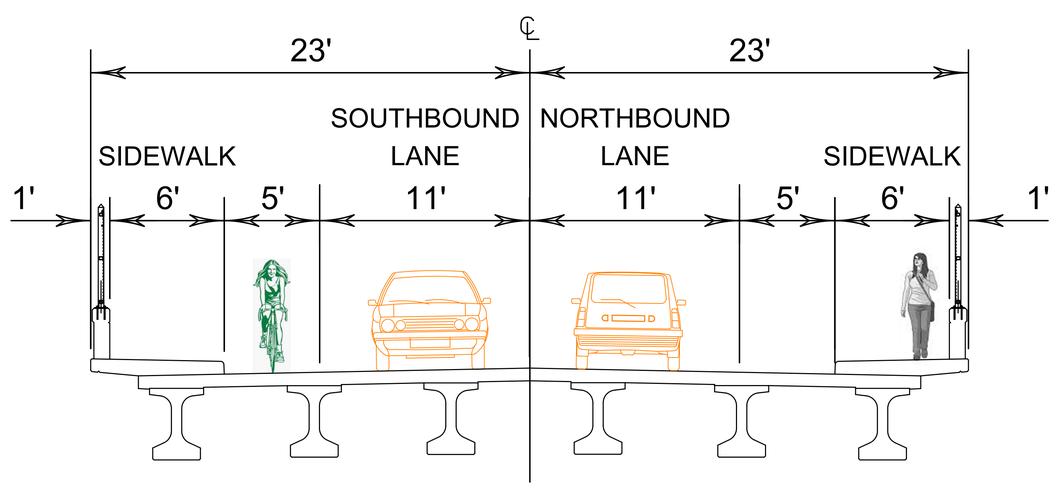

2-LANE SECTION
FOR REPLACEMENT ALTERNATIVES WITH ROUNDABOUTS

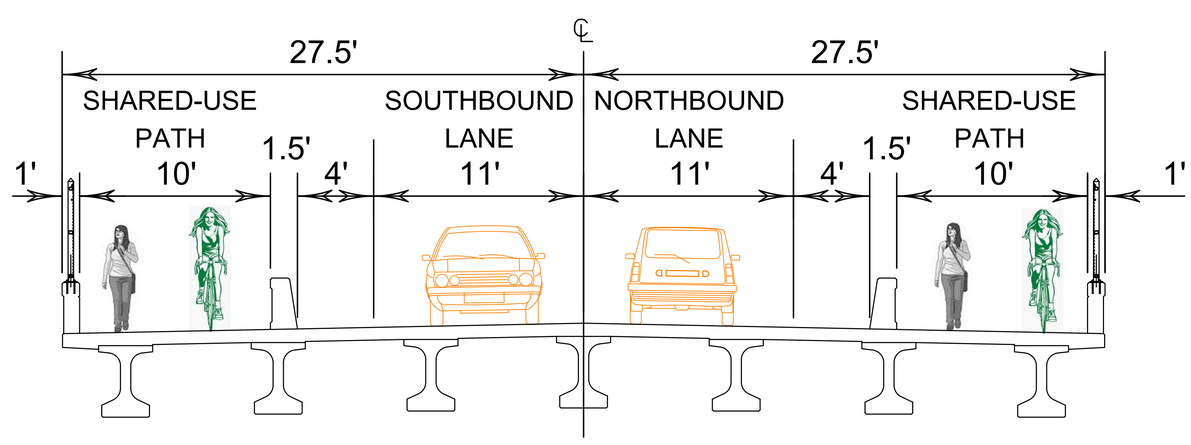

2-LANE SECTION WITH OPTION
FOR SHARED-USE PATH

*3-LANE WILL ADD ADDITIONAL 11' TURN LANE,
SHARED-USE PATH MAY INCLUDE LOCAL COST PARTICIPATION

RACINE STREET MOVABLE BRIDGE

WISCONSIN DEPARTMENT OF TRANSPORTATION