WISCONSIN DEPARTMENT OF
TRANSPORTATION SOUTHWEST REGION

US12 SAFETY AND OPERATIONS ANALYSES, CORRIDOR AND ACCESS MANAGEMENT STUDY

COUNTY N TO WIS 26
COTTAGE GROVE TO FORT ATKINSON
DANE AND JEFFERSON COUNTIES, WI
WisDOT ID: 3080-00-09

Prepared by:
TranSmart Technologies, Inc.
2802 Coho Street, Suite 102
Madison, WI 53713

September 2014

2101 WRIGHT STREET
MADISON, WI 53704

Table of Contents

Executive Summary I
Part I Study Background and Introduction 1
1.0 Report Structure 2
2.0 Study Area and Background 3
Importance of US 12 4
Origin of US 12 Corridor 4
Connections 2030 Future Vision 4
Current and Recent Projects and Activities 5
3.0 Reason for Study 6
Study Scope 7
Specific Study Needs 7
Existing and Future Traffic Volumes 7
Level of Service 9
Intersection Operations 9
Safety 10
Changing Landscape 12
Part II Inventory of Existing Conditions/Environmental Information 13
1.0 Information Resources 13
1.1 Agency Coordination and Review 13
1.2 Public Involvement 13
1.3 Spatial Information 14
2.0 Existing Conditions 15
2.1 Socioeconomic Conditions 15
General Economics and Economic Development 15
Community and Residential Elements and Environmental Justice 17
Agriculture 24
Agriculture Operations Survey 25
Archeological and Historic Resources 26
Hazardous Materials 31
Aesthetics 34
2.2 Environmental Conditions 41
Wetlands 41
Open Water, Streams, and Floodplains 44
Upland Habitat 46
Threatened and Endangered Species and Species of Special Concern 47
Unique Areas (Section 4(f) and Section 6(f) Protected Lands) 48
Air Quality 51
2.3 Transportation Corridor Conditions 52
Existing Highway Condition 52

Cross Section 54
Rural Intersection and Private Access Spacing 62
Sign Inventory 63
Utilities 63
Access Controls 63
Multimodal Accommodations 64
Encroachments 67
Structures and Culverts Inventory 67
3.0 Comprehensive Plan Review and Analysis 68
4.0 Traffic Operations Analysis 76
4.1 Existing and Future Traffic Volumes 76
Historic and Existing Traffic Volumes 76
WisDOT Forecast 80
4.2 Level of Service Analysis 84
Mainline Segment Level of Service Analysis 84
Intersection Level of Service Analysis 87
4.3 Preliminary Signal Risk Assessment 89
4.4 Safety Analysis 90
Crash Analysis 90
IHSDM Analysis 95
4.5 Travel Time Study 96
4.6 Truck Origins and Movements through Cambridge 96
4.7 Deer Crashes and Mitigation 97
Part III Strategies and Recommendations & Access Management Plan 99
1.0 Improvement Strategies 100
1.1 Mainline Strategies 100
1.2 Intersections 104
2.0 Access Management Inventory and Plan 118
2.1 Access Inventory and Analysis 122
2.2 Access Management Plan Recommendations 132
Detailed Access Management Strategies and Recommendations 150
3.0 Other Strategies Considered 156
Appendices 161

Appendices

Appendix A Safety Analysis Report
Appendix B WisDOT Wetlands Mitigation Policy
Appendix C Public and Agency Comments
Appendix D Agriculture Operations Survey Report
Appendix E Threatened and Endangered Species
Appendix F US 12 Rural Intersection and Private Access Spacing
Appendix G Bicycle, Snowmobile, and Other Recreational Maps

Appendix H Traffic Operations Data
Appendix I Drainage Outlets and Structures Inventory
Appendix J Land Use Maps
Appendix K Digital Appendix

Tables

Table 1 Historic and forecast segment traffic volumes (AADT) 9
Table 2 Peak-hour levels of service for US 12 rural segments....9
Table 3 Peak-hour LOS ratings for worst approach at US 12 intersections (AM/PM) 10
Table 4 Segment crash rates (2005 to 2009) 11
Table 5 Public involvement history 14
Table 6 Largest US 12 corridor employers in 2010....16
Table 7 Median household incomes ($) in corridor communities 17
Table 8 Corridor community populations....18
Table 9 Housing units in study area communities 18
Table 10 Demographic characteristics of study area communities 19
Table 11 Study area demographic data 20
Table 12 Population 65 years and older in study area communities (percent)....21
Table 13 Populations below poverty level (percent) in corridor communities 22
Table 14 Schools in the study area....23
Table 15 Land in crops (acres) and selected farm animal totals for Dane and Jefferson counties 24
Table 16 Historic and potentially historic places....28
Table 17 Previously recorded archeological resources 29
Table 18 Potential hazardous materials sites 31
Table 19 Wetland types in the study area 41
Table 20 Stream crossings 45
Table 21 Threatened and endangered species and species of concern within the study corridor 47
Table 22 Deficient horizontal curves....53
Table 23 Vertical curves with less-than-desirable K values....53
Table 24 WisDOT access spacing guidelines 62
Table 25 Encroachments into the US 12 right of way 67
Table 26 Structures 67
Table 27 Local plans....68
Table 28 Summary of potential transportation effects....75
Table 29 Historic and current traffic volumes (AADT) on US 12 segments 76
Table 30 2011 peak-hour intersection turning movement counts....77
Table 31 Current and forecast WisDOT traffic volumes (AADT) on US 12 segments 80
Table 32 2040 peak-hour WisDOT forecasts....81
Table 33 US 12 segment levels of service and percent time spent following for the design hour (peak flow direction/non-peak direction)....85
Table 34 Peak-hour LOS ratings for worst approach, with delay times, at corridor intersections (AM/PM)....87
Table 35 Minimum threshold traffic volumes (rural) 89
Table 36 US 12 intersections that exceed minimum threshold traffic volumes 89
Table 37 US 12 segment and intersection crash totals 92
Table 38 US 12 segment crash data (excluding deer crashes) and rates (per 100 million vehicle miles) 92
Table 39 Intersection crash data....94
Table 40 IHSDM expected intersection crash rates....95
Table 41 Deer crashes and crash rates on US 12 segments, 2005 to 2009....97
Table 42 Optimal passing lane length....102
Table 43 Intersection design and left-turn lane warrants....105
Table 44 WisDOT access spacing guidelines for a principal arterial 120

Table 45 Spacing standards for private driveways from public road intersections for principal arterial undivided state highways 123
Table 46 Access inventory and recommendations 124
Table 47 Encroachments in the US 12 right of way 157

Figures

Figure 1 Study area map 3
Figure 2 US 12 corridor segments 8
Figure 3 Census blocks with concentrations of minority populations 20
Figure 4 School district boundaries 23
Figure 5 Prime soils locations within the US 12 study area 25
Figure 6 Gangstad farmstead round barn 26
Figure 7 Historic buildings in Cambridge and the town of Oakland 27
Figure 8 Historic and potentially historic places 28
Figure 9 View of the US 12 corridor near County N (photos 1 and 2) 34
Figure 10 US 12 corridor in the town of Cottage Grove (photos 3 and 4) 36
Figure 11 Views near County BN (photos 5 and 6) 36
Figure 12 Views in the town of Deerfield (photos 7, 8, 9 and 10) 37
Figure 13 Main Street in Cambridge (photos 11, 12, 13, and 14) 38
Figure 14 Oakland Center and Oestreich Lane (photos 15 and 16) 39
Figure 15 Between County J and County C (photos 17 and 18) 40
Figure 16 County C area; four-lane roadway near WIS 26 (photos 19 and 20) 40
Figure 17 Segment and intersection levels of service 85
Figure 18 US 12 level of service as a function of percent time spent following 86
Figure 19 US 12 segments for crash analysis 91
Figure 20 Proposed intersection improvements at County BN/Nora Road 107
Figure 21 Proposed improvements at County W/Oak Park Road 108
Figure 22 Preferred alternative for the US 12/WIS 73 intersection 109
Figure 23 Proposed improvements at Clearview and State Farm roads 110
Figure 24 Proposed improvements at County A 114
Figure 25 Proposed improvements at County J 115
Figure 26 Proposed improvements at County G 116
Figure 27 Proposed improvements at County C/Hoard Road 117
Figure 28 WisDOT access control guidelines for expressways and freeways 121
Figure 29 Schuster Farm access improvement alternative 159

Exhibits

Exhibit 1 Potential hazardous materials sites 32
Exhibit 2 Aesthetic overview and topographical map of the corridor 35
Exhibit 3 Wetlands, open water, rivers, and streams 42
Exhibit 4 Unique areas 49
Exhibit 5 Typical sections 55
Exhibit 6 Multimodal accommodations 66
Exhibit 7 Turning movement count data and locations 78
Exhibit 8 2040 forecast peak-hour intersection volumes 82
Exhibit 9 Mainline improvement strategy 101
Exhibit 10 US 12/18 intersection alternatives 113
Exhibit 11 Access management recommendations 133

Executive Summary

US 12 is a *Corridors 2030* Connector Route, recognized by the Wisconsin Department of Transportation (WisDOT) as an important regional corridor and long truck route. Within the study area, it is predominantly a two-lane rural roadway with short four-lane segments, one short urban segment, and at-grade intersections. West of US 18, the *State Access Management Plan* designates US 12 as a Tier 1 highway; east of Cambridge it is a Tier 2A highway. Increased traffic volumes are expected to degrade the function of most segments of the corridor to unacceptable levels of service. The corridor serves as an important regional route that connects the Madison region, Fort Atkinson, Whitewater, and Lake Geneva to Backbone routes such as I-39/90, I-43, and northeastern Illinois. The *Connections 2030* long-range transportation plan identifies US 12 as a candidate for potential capacity expansion.

Reason for Study

Current high and growing traffic volumes, population and economic growth, and land development are prompting consideration of long-range access alternatives for the corridor to ensure a safe and efficient roadway that will function within the existing cross section for as long as possible. It should be noted that this study is not intended to precipitate a capacity expansion project. The study has three primary purposes:

- Collect, record, and distribute environmental, transportation, and socio-economic data pertaining to US 12 between Cottage Grove and Fort Atkinson. The study report will then be used as a source of information for future transportation decisions related to the corridor.
- Conduct a needs analysis to identify existing operational deficiencies and future corridor needs.
- Develop options to preserve the function of US 12, increase safety, and identify long-term strategies and recommendations that will preserve the corridor as a two-lane facility for as long as possible.

There are several specific conditions that are anticipated to contribute to the need for corridor preservation along US 12:

- Anticipated increase in traffic from regional and local sources between 2011 and 2040.
- Reduced intersection function at existing locations not designed to accommodate higher numbers of entering vehicles.
- Anticipated safety issues stemming from increased traffic and fewer gaps for entering US 12 from local road and driveway connections.
- Transition and intensification of land uses and human activities from rural agriculture to commercial agriculture, agribusiness, and community expansion with potential to add more traffic to the corridor or change existing travel patterns.

Agency Coordination and Public Involvement

Two meetings were held with agencies and local communities as part of the needs identification process. Meeting minutes and map comments were recorded documenting local environmental, cultural, agricultural, and transportation facilities and issues, as well as planning and development factors. In addition, a survey of agricultural operations was conducted.

Traffic Operations

Traffic volumes are expected to grow concurrent with community and economic growth and land development along the corridor. Increased traffic will lead to a further reduction in gaps necessary for safe access to US 12 from side roads and private driveways.

Level of service (LOS) analyses were conducted based on existing and forecast traffic volumes for four rural corridor segments and several intersections. All four rural segments of US 12 currently experience peak-hour levels of service that are worse than LOS C; during peak traffic hours, segments east of Cambridge currently experience LOS D and are forecast to experience LOS E by 2020, while segments to the west of Cambridge currently experience LOS E. Operations within Cambridge were not analyzed because HCS software requires signal control at urban intersections to assess level of service.

All interchange ramps and many public intersections on the US 12 study corridor are expected to operate at acceptable levels of service through 2040. All public intersections east of Cambridge, with the exception of County C/Hoard Road, are expected to function at LOS C or better through 2040. Several intersections west of Cambridge now function at unacceptable levels of service during some part of the day, with operations expected to worsen if traffic volumes increase as forecasted through 2040. Four rural intersections on the western half of the study corridor currently function at LOS D or worse during some part of the day: County BN/Nora Road, County W/Oak Park Road, WIS 73 (north), and WIS 73 (south). By 2030, the function of all four is expected to fall to LOS F during the AM or PM peak hour. Two intersections in Cambridge (urban) currently operate at LOS E or F: WIS 134 and US 18. By 2030, the function of County B/Spring Street is also expected to fall to LOS E during the PM peak hour.

Four intersections within the corridor were evaluated through a preliminary risk assessment to identify those that could be candidates for a future traffic signal. The intersections at WIS 73 (north) and US 18 met the criteria for Case 1 in 2011, while County W/Oak Park Road, WIS 73 (north), and WIS 73 (south) met Case 2 criteria in 2011. With additional data collection, these intersections could be evaluated to determine if traffic signals are warranted.

A safety analysis was conducted using crash data from the years 2005 through 2009. A total of 241 non-deer crashes occurred within the study area. Intersection-related crashes accounted for 90 (37 percent) of the total non-deer crashes. The four rural corridor segments had crash rates below state averages, while Cambridge experienced a crash rate of 215, which is slightly above the state average of 195 for its functional peer group. Two segments had fatal crash rates above the state average of 1.1 fatal crashes per 100 million vehicle miles: the County N to WIS 73 segment had a fatal crash rate of 2.7 and the WIS 73 to US 18 segment had a fatal crash rate of 2.2. Intersections at the County N interchange, County W/Oak Park Road, WIS 73 (north leg), WIS 73 (south leg) and US 18 were identified as having potential safety issues based on an initial analysis of the crash records.

Strategies and Recommendations

It is possible that traffic volumes on US 12 could reach the highway's capacity and impair its safety and function, making corridor preservation an important objective in the near term. Furthermore, it should be emphasized that bypass corridors and capacity expansion are outside the scope of this study. Even though the *Connections 2030* plan identifies portions of US 12 for future capacity expansion, the state

legislature has not authorized WisDOT to study capacity improvements. Even if a capacity expansion project were approved, undertaking an environmental impact statement (EIS) would likely be required, meaning that construction would not begin until several years after approval.

Therefore, it is prudent to pursue measures that focus on corridor preservation. Strategies and recommendations have been crafted to extend the useful life of the existing facility for as long as possible. In order to meet WisDOT standards, numerous intersections have been identified for recommended improvements that include adding bypass lanes and improving turning radii, vision triangles, and shoulders. The measures listed below have been tailored to address the most pressing current and projected safety and operational issues on the US 12 corridor and selected intersections.

West Corridor. Constructing eastbound and westbound passing lanes between County N and WIS 73 could reduce vehicle percent time spent following, thus improving the level of service on the west corridor segments.

County BN/Nora Road. Adding eastbound and westbound left-turn lanes at this intersection could reduce the incidence of vehicles passing on the shoulder.

County W/Oak Park Road. Adding eastbound and westbound left-turn lanes at this intersection could reduce the incidence of rear-end crashes and vehicles passing on the shoulders. Adding a southbound right-turn lane could improve the function of this intersection.

State Farm Road and Clearview Roads. Realigning State Farm Road across from Clearview Road could improve safety at this location.

US 18. Signalization could improve intersection function, reduce westbound right-turn crashes, improve the levels of service at nearby intersections, and improve pedestrian safety and comfort.

County B/Spring Street. Future signalization, removing parking, and adding turn lanes could improve intersection function and the levels of service at other nearby intersections.

Lake Ripley Area Corridor. Relocating portions of US 12 onto a new parallel alignment could provide safer access to private properties and local public roads.

County A (north leg). Adding an eastbound bypass or left-turn lane and a westbound right-turn lane could improve safety and meet driver expectation.

County J. Adding eastbound and westbound left and right-turn lanes could improve safety and meet driver expectation.

County G. Adding an eastbound left-turn lane and a westbound right-turn lane could improve future safety and function.

County C/Hoard Road. Adding mainline left and right-turn lanes and managing access could improve safety and function as traffic volumes grow and adjacent properties develop.

Finally, an access management plan was created to improve safety and long-term function of the highway. Recommendations include relocating and consolidating driveway connections and field entrances, enhancing intersection spacing and geometry, and providing local street connections at some locations.

Part I Study Background and Introduction

The Wisconsin Department of Transportation, Southwest Region (WisDOT) initiated the US 12 Safety and Operations Analyses, Corridor and Access Management Study in December 2010. TranSmart Technologies, Inc. was contracted by WisDOT to assist in the study process. The study took place over a 42-month period and included thorough investigation of existing social, cultural, natural, and physical features, extensive data collection, and operational analysis. The study was put on standby in early 2012 through the winter of 2013 to allow for the development of the jug-handle improvement to the US 12/WIS 73 intersection as part of the I-39/90 Expansion Project. The study included the development of strategies and recommendations with agency and public input throughout the entire study process. The study was concluded with the *US 12 Safety and Operations Analyses, Corridor and Access Management Study Report*, released in June 2014. The core study team consisted of the following individuals:

- Franklin Marcos, Project Manager, Wisconsin Department of Transportation (WisDOT) Southwest Region
- John Jenkins, Project Engineer, WisDOT Southwest Region
- Mary Pamperin-Volk, Multimodal Coordinator, WisDOT Southwest Region
- Brandon Lamers, P.E., Planning Supervisor, WisDOT Southwest Region
- Manfred Enburg, P.E., Consultant Project Manager, TranSmart Technologies
- Charles Wade, A.I.C.P., TranSmart Technologies
- Joel Brown, TranSmart Technologies
- Seth Johnson, P.E., TranSmart Technologies
- Richard Kedzior, A.I.C.P., TranSmart Technologies
- Nick Becker, P.E., URS Corporation

Other organizations and individuals also provided important input to the study effort, including:

- The Village of Cambridge, the Cambridge Area School District, and the Fort Atkinson School District hosted study meetings and provided use of their facilities. Many thanks!
- Jefferson County officials and Highway Department

1.0 Report Structure

The *US 12 Safety and Operations Analyses, Corridor and Access Management Study Report* is divided into three parts to facilitate decision making regarding the US 12 corridor:

- Part I—Study Background and Introduction
- Part II—Inventory of Existing Conditions/Environmental Information
- Part III—Strategies and Recommendations/Access Management Plan

Part I – Study background and introduction

This section of the report introduces the scope and intent of the study, and provides general background information and context for the study.

Part II – Inventory of existing conditions and constraints analysis

The inventory includes information to facilitate future decision making related to US 12. A companion flash drive with geospatial and other data collected from various sources is also included in this part of the report as Appendix K. The inventory includes information relating to both environmental and socioeconomic conditions within the US 12 corridor.

Part III – Strategies and recommendations/access management plan

The final part of the report includes strategies and recommendations developed from findings and analysis of the study team. Another goal of the corridor study is to identify opportunities to preserve the useful life of the highway as a two-lane facility for as long as possible, without precluding the advisory recommendations of the WisDOT *Connections 2030 Plan*. Even though the *Connections 2030 Plan* identifies portions of US 12 for ultimate capacity expansion, it is noted that such a project is unlikely to be funded in the near term due to fiscal limitations. Even if a capacity expansion project were approved, construction would be several years into the future, making corridor preservation an important consideration.

Both short- and long-term strategies and recommendations were considered during the course of the study. These strategies include minor and other geometric enhancements to the existing facility, intersections, and local road system to maintain safety and traffic operations at anticipated future traffic volumes. In addition to addressing current deficiencies along US 12, a review of access conditions and the development of an advisory access management plan are also included in the study recommendations.

2.0 Study Area and Background

The area of study is located along the US 12 corridor between County N in Dane County (just south of Cottage Grove) and WIS 26 in Jefferson County (Fort Atkinson) and includes all areas within one mile of US 12 between the study termini. In addition to the corridor itself, the study also considers the influence of regional traffic patterns (see the study area map in figure 1 below).

Figure 1 Study area map

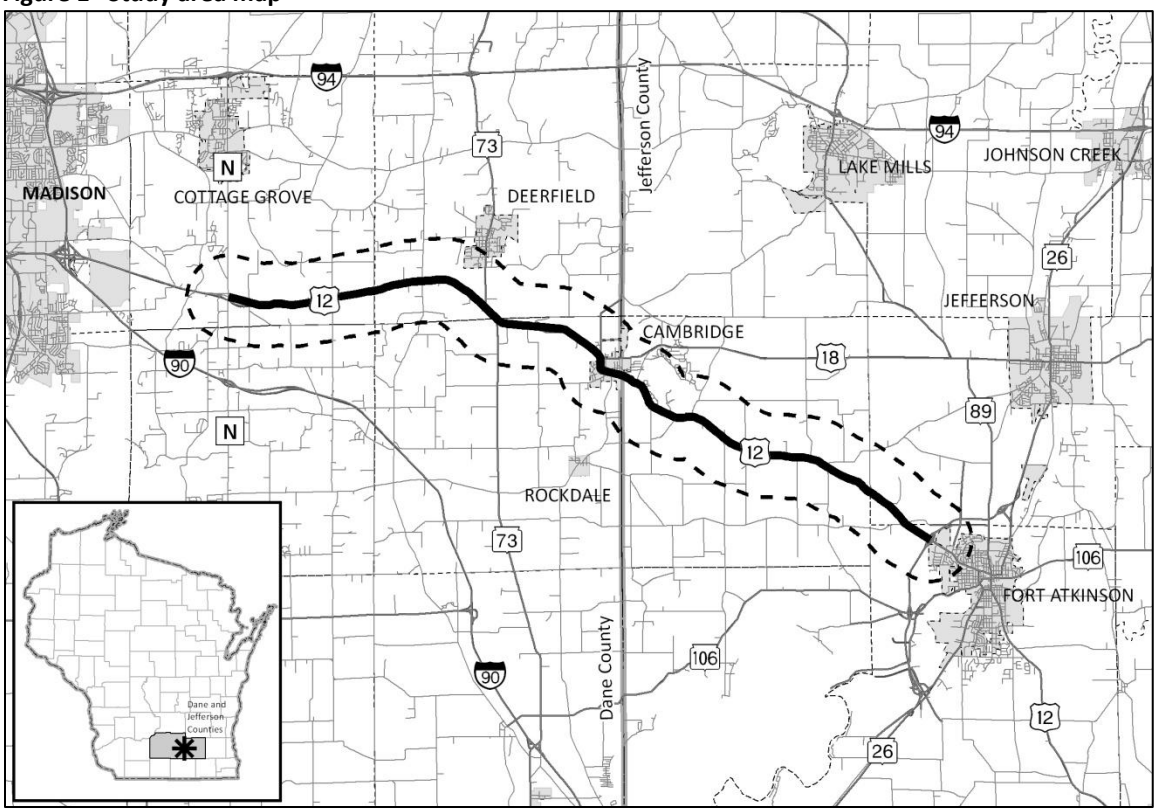

US 12 is a rural two-lane highway throughout the 19.3-mile study corridor, with a few short segments that are exceptions. Near the western terminus of the study area at County N, US 12 is a four-lane divided expressway that transitions to a two-lane facility about ¾-mile east of County N. Within Cambridge, US 12 is a two-lane urban street with numerous intersections and private driveways. At the eastern terminus of the study area at the WIS 26 interchange, US 12 is a four-lane divided roadway for about ½-mile as it leads into Fort Atkinson.

The Federal Highway Administration (FHWA) defines areas like the US 12 study corridor as *rural* and *urban boundary rural*. Urban boundary rural areas are highly developed rural areas whose economic and population growth and transportation facilities are tied to an urban center. The growth of the US 12 corridor communities in recent decades is due to their proximity to large employment centers in the Madison region and Fort Atkinson, which distinguishes this largely rural area from other rural regions that have distinctly independent economies.

Importance of US 12

The US 12 corridor is part of the National Highway System and identified as a Connector Route and part of the Geneva Lakes Corridor in WisDOT's *Corridors 2030* route network and *Connections 2030 Long-Range Multimodal Transportation Plan*. Connections 2030 routes consist of a network of high-quality routes connecting major economic and tourism centers within the state. Connector routes receive higher priority than other similar state highways and have more rigid thresholds and design criteria in order to maintain their ability to efficiently serve regional mobility goals.

US 12 serves as an important corridor for the communities it passes through. Within Cambridge, US 12 serves as Main Street, and an important focal point of economic and community activities. US 12 also serves as the primary commuting and truck route between Fort Atkinson and the Madison region.

In rural portions of the study area, the US 12 corridor provides access to agricultural operations and movement between fields, and the movement of products and equipment to and from markets. US 12 also provides access to numerous recreational resources in the corridor region. The entire study corridor falls within the Glacial Heritage Area and passes near the Glacial Drumlin State Trail, the Glacial River Trail, Lake Ripley, Cam-Rock Park, Red Cedar Lake, Dorothy Carnes Park, and the Koshkonong Wildlife Area.

Origin of US 12 Corridor

The US 12 corridor follows the general course of an Indian trail that preceded 19th Century European settlement. The earliest records of a settler road between Whitewater, Fort Atkinson and Madison date from the 1830s, just after the establishment of Fort Atkinson by the United States Army. The Racine-to-Madison territorial road, authorized by the state legislature in 1838, passed through Whitewater and Fort Atkinson to Madison and likely followed the current US 12 study corridor. Over time, the route has been steadily upgraded from trail to path to road to plank road to paved road and highway. Wisconsin designated the highway as State Trunk Highway 12 in 1918. Designation as US 12 occurred at the debut of the U.S. Highway System in 1926. (*Sources: Jefferson County, Wisconsin and its People: A Record of Settlement, Organization, Progress and Achievement* (1917); *Koshkonong Country: A History of Jefferson County, Wisconsin* (1975); www.wisconsinhighways.org)

Connections 2030 Future Vision

The study area is part of the Geneva Lakes Corridor in WisDOT's *Connections 2030 Long-Range Multimodal Transportation Plan* (see http://www1.wisconsindot.gov/Pages/projects/multimodal/conn2030.aspx). The Geneva Lakes Corridor includes US 12 from Madison to Fort Atkinson, Whitewater, Lake Geneva and the Wisconsin–Illinois state line. The plan outlines a future vision for the corridor through 2030 that includes air travel, intercity bus, transit, bicycle and pedestrian modes occurring within the corridor in addition to the more common vehicular modes. The plan identifies this corridor study for the near term (by 2013) and the possible construction of additional lanes at select locations and conversion to freeway from I-39/90 to US 18 (by 2030) if supported by an environmental document. A copy of the corridor maps from the plan is included in digital Appendix K. *The focus of this study does not include capacity expansion.*

Connections 2030 includes *Corridors 2030*, an update of the *Corridors 2020* statewide route system. *Corridors 2020* was first published in 1988 to identify links between important economic and population centers throughout Wisconsin. The updated *Corridors 2030* system has approximately 1,450 miles of Backbone routes and 2,300 miles of Connector routes statewide; it identifies the US 12 study corridor as a Connector route.

State Access Management Plan

In the State Access Management Plan, US 12 within the study area has been designated Tier 1 west of Cambridge and Tier 2A east of Cambridge. Tier 1 access management emphasizes interstate travel and is the highest level of access restriction requiring that new access occur only at interchanges. Tier 2A access management in rural areas entails highway access primarily at at-grade public road intersections.

Current and Recent Projects and Activities

US 12 in the study area was improved in two separate projects completed in 1998 and 2004. In 1998, US 12/18 reconstruction work was completed to upgrade it to a four-lane divided expressway between I-39/90 and County N. That same year, reconstruction of US 12 was completed between County N and Cambridge to replace the road surface and eliminate many geometric deficiencies including several sharp curves and intersections with poor sightlines. In 2004, WisDOT reconstructed US 12 between Cambridge and Fort Atkinson, straightening and flattening the highway in several locations.

WisDOT had been studying US 12 bypass alternatives for the Fort Atkinson area (between the Whitewater bypass and WIS 26) through an environmental impact study (EIS). This study was halted in 2012. If the study is restarted, upon approval of a Final EIS (FEIS), WisDOT would prepare an official map of the preferred bypass corridor.

WisDOT completed the WIS 26 two-lane bypass of Fort Atkinson in 1995. In 2005, an Environmental Impact Statement (EIS) was completed on 48 miles of WIS 26 between Janesville and WIS 60 north of Watertown. Expansion of the Fort Atkinson bypass to a four-lane freeway was completed in late 2011.

WisDOT is currently in the final design phase of a major project to reconstruct 45 miles of I-39/90 between I-94 in Madison and the Illinois state line. The project includes mainline reconstruction and capacity expansion, interchange reconstruction, and numerous design improvements. This major project is scheduled to begin construction in 2015. It is anticipated that the project will affect travel patterns on WIS 73 and could influence the US 12/WIS 73 intersection within the study area.

WisDOT recently analyzed the Beltline between US 14 and County N and is developing concepts to improve safety and operations. The Madison Beltline Safety and Operations Study documented roadway safety concerns, increasing travel demand and congestion, limited accommodations for alternate modes of travel, and aging pavement and structures. To address these issues, a Planning and Environment Linkages (PEL) Study is underway that will develop, evaluate and screen broad regional solutions. The PEL study is part of a streamlined National Environmental Policy Act (NEPA)

process that will conduct a detailed investigation of all solutions developed in the PEL study that have the potential to address Beltline issues. The NEPA process will ultimately produce a Final Environmental Impact Statement (FEIS) or Environmental Assessment (EA) detailing the Preferred Alternative for the corridor, including impacts, mitigation and costs.

WisDOT is studying freeway conversion of US 12 between I-39/90 and County N. Alternatives will be evaluated to determine the level of safety improvement, costs, right of way needs, land use, and environmental and local impacts. An EA document will be completed as part of the study to evaluate the impacts of freeway conversion and identify and preserve the recommended alternative.

WisDOT will resurface and reconstruct three miles of WIS 134 between US 12 and London in 2016. The roadway was milled and overlaid with asphalt in 2013 as a temporary resurfacing measure. Reconstruction of the middle one-mile segment will improve curves to a 55 mph design standard and widen shoulders to six feet (five feet paved). Resurfacing of the northern and southern segments of WIS 134 will provide four-foot shoulders (three feet paved). A minimum of three-foot paved portions of the shoulders will provide sufficient width for bicycling the entire three-mile length of WIS 134. No intersection modifications will occur at the US 12/WIS 134 intersection.

WisDOT is currently conducting the Southwest Region Park-and-Ride System Study, which will update the region's 1999 park-and-ride system plan and identify locations for future investment in the 16-county region. Potential future park and ride locations may be located within Dane and Jefferson Counties near or within the study corridor.

Jefferson County plans to resurface County C in 2013 and reconstruct County J within the 2014–16 timeframe. Both county highways intersect US 12 within the study corridor.

3.0 Reason for Study

US 12 within the study corridor is predominantly a two-lane rural roadway with at-grade intersections. Consideration of long-range access alternatives for the corridor is needed to address growing traffic volumes and land development to ensure a safe and efficient roadway that will function within the existing cross section for as long as possible.

The corridor is an important route serving Madison, eastern Dane County, Jefferson County, Fort Atkinson, Lake Geneva, and numerous small communities (see figure 1). It is an important long truck route and is experiencing increases of both heavy truck and automobile traffic volumes. Furthermore, the populations of Fort Atkinson, Deerfield, and several rural towns are growing faster than the state as a whole; these communities also provide large numbers of commuters to Madison-area job centers.

This study has three primary objectives:

1. The study will serve as a mechanism to collect environmental, transportation, and socio-economic data pertaining to US 12 between Cottage Grove and Fort Atkinson. The study report will then be used as a source of information for future transportation decisions related to the corridor.

2. A needs analysis will be conducted to identify existing operational deficiencies and future corridor needs.
3. Options will be developed to preserve the function of US 12, increase safety, and identify long-term strategies and recommendations that will preserve the corridor as a two-lane facility for as long as possible.

Study Scope

US 12 is an important regional corridor providing connections between the city of Madison and the southeast portion of the state. As traffic volumes increase between the Fort Atkinson and Madison, eventually this corridor could require expansion to four lanes. The goal of this study is to identify strategies to preserve the highway as a two-lane facility for as long as possible and to delay the need for a capacity expansion project for as long as possible. This could be accomplished through enhancement of deficient highway segments and intersections, examination of direct access and development of a long-term access management plan for the corridor.

Specific Study Needs

There are several specific conditions that are anticipated to contribute to the need for corridor preservation along US 12, including:

- Anticipated increase in traffic from regional and local sources between 2011 and 2040.
- Reduced intersection function at existing locations not designed to accommodate higher numbers of entering vehicles.
- Anticipated safety problems stemming from increased traffic and fewer gaps for entering US 12 from local road and driveway connections.
- Transition and intensification of land uses and human activities from rural agriculture to commercial agriculture, agribusiness, and community expansion with potential to add more traffic to the corridor or change existing travel patterns.

Existing and Future Traffic Volumes

Historic traffic count data along the US 12 corridor depicts a general increase in traffic between 2006 and 2010. In 2006, traffic volumes ranged between 9,500 and 11,500 Annual Average Daily Traffic (AADT) west of Cambridge and between 5,800 and 7,400 AADT between Cambridge and Fort Atkinson. The highest volumes within the study area are located between the two US 12/WIS 73 intersections with 11,500 AADT in 2006.

As part of the study, 2011 traffic counts were conducted for locations along US 12 to determine current volumes and vehicle mix along the corridor. Current traffic volumes collected in 2011 show an AADT ranging between 10,500 and 11,500 west of Cambridge and 9,000 east of Cambridge, with the highest volumes still between the two US 12/WIS 73 intersections. Within Cambridge (the urbanized portion of the corridor) the traffic volume was 8,100 AADT in 2006 and 9,500 in 2011.

Traffic forecasts were developed for the study area by WisDOT assuming a relatively stable rate of growth based on current conditions (see Appendix K). Excluding Cambridge, traffic volumes are anticipated to range between 14,900 and 15,800 west of the village and between 10,900 and 13,000

east of the village by year 2040. Within Cambridge, traffic volumes are anticipated to reach 12,300 by 2040.

Figure 2 US 12 corridor segments

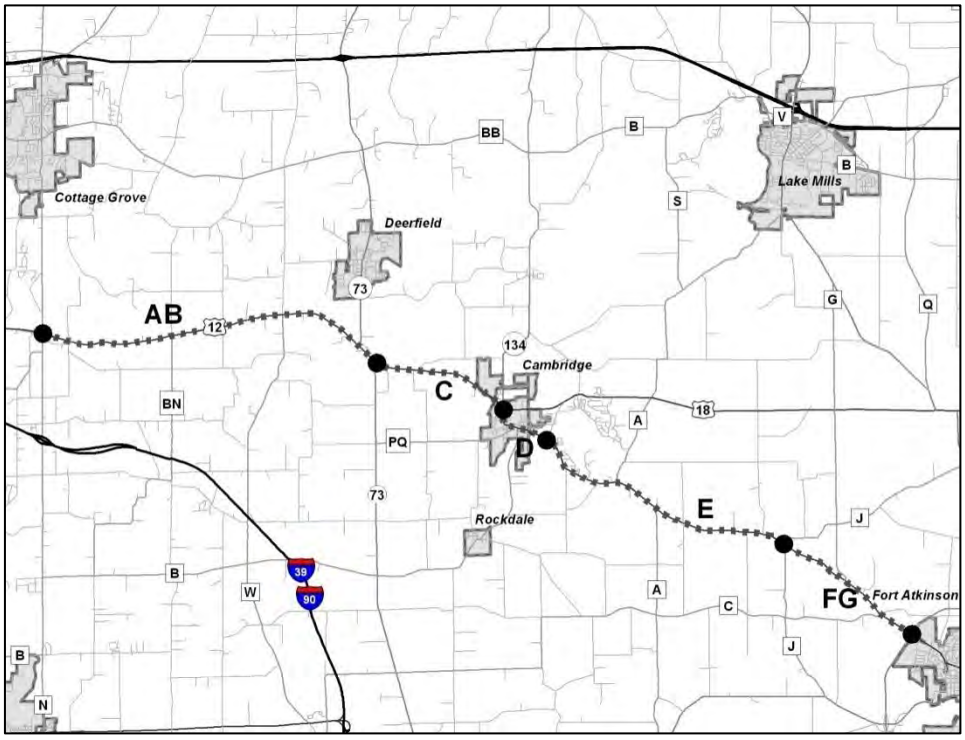

For purposes of analysis, the US 12 corridor was divided into five segments based on highway characteristics. The segments, shown in figure 2, consist of the following:

- Segment AB — Rural 7.0-mile segment located between the County N interchange and the US 12/WIS 73 (south) intersection. Approximately 0.75-mile of the western portion of the segment is four lanes.
- Segment C — Rural 2.7-mile segment located between the US 12/WIS 73 (south) intersection and the US 12/18/Jefferson Street intersection within Cambridge.
- Segment D — Urbanized 1.2-mile segment located between the US 12/18 intersection and Park Road within the Cambridge and Lake Ripley area.
- Segment E — Rural 5.3-mile segment located between Park Road and County J. The western portion of the segment is considered as a transition area between suburban and rural activities.
- Segment FG — Rural 3.1-mile segment located between County J and the WIS 26 interchange. Roughly 0.5-mile of the eastern portion of the segment is four lanes.

Table 1 shows the distribution of traffic volumes on the varying corridor segments.

Table 1 Historic and forecast segment traffic volumes (AADT)

Segment	2006	2011	2020	2030	2040
County N to WIS 73 (south) four/two-lane rural	10,600	11,500[1]	12,900	14,400	15,800
WIS 73 (south) to US 18 two-lane rural	9,500	11,400	12,500	13,700	14,900
US 18 to Park Road (Cambridge) two-lane urban	8,100	9,100[1]	9,900	10,700	11,500
Park Road to County J two-lane rural	6,300	9,700	10,300	11,100	11,800
County J to WIS 26 two/four-lane rural	7,400	9,600	10,700	11,900	13,000

[1]2010 counts

Level of Service

A level of service (LOS) analysis was conducted based on existing and projected traffic volumes for the study corridor. Table 1 in the previous section shows the traffic volumes used for five segments of US 12 through 2040. Highway Capacity Manual (HCM 2010) and HCS+ software were used to determine LOS values for those segments. In addition, the segments were analyzed using the volumes from table 1 and the WisDOT Facilities Development Manual (FDM) Procedure 11-20-1, figure 1. Table 2 shows the levels of service that were determined from this analysis.

Table 2 Peak-hour levels of service for US 12 rural segments

Segment	2011	2020	2030	2040
County N to WIS 73 (south)	E	E	E	E
WIS 73 (south) to US 18	E	E	E	E
Park Road to County J	D	E	E	E
County J to WIS 26	D	E	E	E

As a Connector Route identified in WisDOT's *Corridors 2030 Plan*, the acceptable level of service is LOS C (FDM Procedure 11-5-3, table 1). All four rural segments of US 12 currently experience peak-hour levels of service that are worse than LOS C; during the peak hour, segments east of Cambridge experience LOS D and segments to the west of Cambridge experience LOS E.

Intersection Operations

As traffic volumes increase along US 12, it is anticipated that some existing intersections will need to be adjusted to accommodate additional capacity needs. Meanwhile, other intersections will experience issues related to gaps on US 12. As traffic increases, the number and size of gaps on US 12 will decrease resulting in greater difficulty entering the highway from side roads. This will in turn result in longer wait times that could increase the likelihood of high-risk driver behavior potentially resulting in more crashes.

Intersection turn counts were conducted at 16 intersections and tube counts were conducted at four locations on US 12 between County N and WIS 26 in 2011 as part of the study (see Appendix H and digital Appendix K for count data and worksheets). In addition, WisDOT operates an Automatic Traffic Recorder (ATR) Station collecting continuous data that was also referenced. The data collected was considered in conjunction with historical WisDOT count data along US 12. Table 3 shows the worst AM and PM peak-hour levels of service for existing and future traffic at the intersections along the corridor.

Table 3 Peak-hour LOS ratings for worst approach at US 12 intersections (AM/PM)

Intersection	2011	2020	2030	2040
County N EB ramps	B/B	B/B	B/B	B/B
County N WB ramps	B/B	B/B	B/B	B/B
County BN/Nora Road	D/F	E/F	F/F	F/F
County W/Oak Park Road	F/F	F/F	F/F	F/F
WIS 73 (north)	C/F	E/F	F/F	F/F
WIS 73 (south)	D/C	E/D	F/D	F/E
WIS 134	C/E	D/F	E/F	E/F
US 18	C/F	C/F	D/F	D/F
County PQ/Water Street	B/C	B/C	B/C	B/C
County B/Spring Street	C/D	C/D	C/E	C/F
Simonsen Street	B/B	B/C	C/C	C/C
County J	B/C	C/C	C/C	C/C
County G	B/B	B/B	B/B	B/C
County C/Hoard Road	C/C	C/C	C/C	C/D
WIS 26 SB ramps	B/C	C/C	C/C	C/C
WIS 26 NB ramps	B/B	B/B	B/B	C/B

All interchange ramps and many public intersections on the US 12 study corridor are expected to operate at acceptable levels of service through 2040. All public intersections east of Cambridge, except County C/Hoard Road, are expected to function at LOS C or better throughout the day through 2040.

However, several intersections west of Cambridge now function at unacceptable levels of service during some part of the day, and their operations are expected to worsen if traffic volumes increase as forecasted through 2040. Four rural intersections on the western half of the study corridor currently function at LOS D or worse during some part of the day: County BN/Nora Road, County W/Oak Park Road, WIS 73 (north), and WIS 73 (south). By 2030, the function of all four is expected to fall to LOS F during the AM or PM peak hour. Two intersections in Cambridge (urban) currently operate at LOS E or F: WIS 134 and US 18. By 2030, the function of County B/Spring Street is also expected to fall to LOS E during the PM peak hour.

Safety

As part of the study's technical analysis, a five-year crash analysis was conducted for the US 12 corridor (see Appendix A, *Safety Analysis Report*). The years studied included 2005 through 2009

and do not include reported collisions involving deer. The corridor crashes were compared to statewide averages for similar highways across the state.

As shown in table 4 below, the segment of US 12 in Cambridge experienced a crash rate above other similar highways during the years studied. In addition, the injury rate for this segment was also higher than the statewide average. The two segments west of the village experienced fatalities resulting in higher than average fatality rates. During 2011, two fatalities and one serious injury crash occurred resulting in additional safety analysis near County BN and at the WIS 73 intersections. Additional areas of concern also include a high number of crashes with deer between WIS 73 and US 12/18 accounting for roughly 75 percent of all crashes that occurred on that segment.

Table 4 Segment crash rates (2005 to 2009)

Segment	No. of Crashes	Crash Rate	Injury Rate	Fatal Rate
County N to WIS 73 (south)	107	73	27	**2.7**
WIS 73 (south) to US 18	28	60	22	**2.2**
US 18 to Park Road (Cambridge)*	47	**215**	**73**	0.0
Park Road to County J	29	48	25	0.0
County J to WIS 26	30	65	11	0.0
Entire Corridor	241	--	--	--

*Urban for comparison to statewide averages (Functional Group 12)

In addition to the segment analysis for the corridor, intersections were studied to determine crash rates. Of the 52 public road connections with US 12, 28 experienced crashes during the years studied (2005 through 2009). Though most of the intersections experienced low crash rates and low severity rates, the intersections of US 12 with County N (eastbound ramps at County N), County W (Oak Park Road), WIS 73 (both intersections), and US 18 had combinations of crash and severity rates that warrant further study. In addition, County BN/Nora Road was further evaluated due to the fatal crash that occurred there in 2011. A detailed discussion of the safety analysis and findings is included in the *Safety Analysis Report,* located in Appendix A.

The Federal Highway Administration's Interactive Highway Safety Design Model (IHSDM) was used to evaluate the rural two-lane roadway segments of US 12. Concerning rural intersections, the IHSDM predicted far more crashes than what has been experienced at those intersections. The two intersections with the highest predicted crash rates were the WIS 73 (north) intersection with 8.05 crashes per year and County W/Oak Park Road with 4.85 crashes per year, rates that are far higher than what was experienced during the 2005 to 2009 study period.

The IHSDM design consistency evaluation found Condition 1 for the corridor as a whole, meaning that posted speeds did not present problems for drivers along a majority of the corridor. Condition 1 indicates that a majority of vehicles are traveling up to 6 mph above the speed limit. However, Condition 2 (where a majority of vehicles are traveling at speeds 6 to 12 miles per hour above the speed limit) was determined just west of Cambridge where the eastbound speed limit changes suddenly from 45 mph to 25 mph.

Changing Landscape

With the exception of the Cambridge-Lake Ripley area, the predominant land use activity within the study corridor is agriculture. Largely due to proximity to Madison area job centers, land use change is occurring more rapidly in Dane County and the western end of the US 12 corridor than in Jefferson County. Land use changes that could affect US 12 include continued growth in the villages of Cambridge and Deerfield. As noted in the land use review section of this report, the *Village of Deerfield Comprehensive Plan* (2007) indicates a desire for commercial and residential growth extending between the village and US 12.

Jefferson County strives to maintain the corridor as an agricultural area and actively maintains land use controls that support agricultural activities. Despite the desire to preserve commercial agriculture along US 12, there have been transitions from active farm operations to on-site agribusiness activities ranging from machinery vendors to "destination" farms marketing to the general public that experience high seasonal traffic. Within Jefferson County, this trend is anticipated to continue. Properties surrounding the WIS 26 interchange are immediately available for conversion from agriculture to commercial use.

Population and employment growth trends within the Madison region and US 12 corridor communities will likely continue for the foreseeable future and spur traffic volume growth along US 12 at rates that are higher than the state as a whole. Employment growth rates experienced by Madison and Fort Atkinson in the past decade, which have been higher than the state as a whole, are expected to continue. As traffic on US 12 is highly correlated with economic activities in and around these cornerstone US 12 corridor communities, traffic volumes are expected to grow in tandem with regional employment.

Part II Inventory of Existing Conditions/Environmental Information

This part of the report includes a summary of corridor research for socio-economic, environmental, and existing transportation-related conditions within the study area.

1.0 Information Resources

Information used to compile this document was obtained from a variety of public sources and data collection efforts specific to this project. State agencies and local governments are the most important sources of information, specifically in the forms of local plans, land information/GIS data, and traffic data. In addition, coordination was also undertaken with federal, state, and local agencies and Native American tribes to obtain review and input.

1.1 Agency Coordination and Review

Agency coordination letters were sent to several groups. Numerous federal, state, and local agencies and community officials were invited to provide comments and attend the project local official and public information meetings at the start of the project.

A study kickoff meeting was held at the Jefferson Highway Department to identify any ongoing plans or projects as well as any concerns that should be addressed as part of the study. The county indicated that it only had minor resurfacing and other similar projects planned within the study area.

A meeting was also held with Jefferson County officials at county offices as part of the project initiation. At this meeting, concerns were expressed over maintaining the existing agricultural landscape within the corridor as well as a clarification of the wetland mitigation polices of WisDOT. As a result of this meeting wetland mitigation policies were further researched and the results of that research are included in Appendix B.

1.2 Public Involvement

The US 12 Corridor Study included public involvement activities throughout the study process to identify important issues related to US 12 in its greater context. Table 5 below lists public involvement activities related to this study. Public involvement included two public information and local officials meetings at the beginning and end of the study and meetings with individual property owners and local government departments to review study strategies and concepts (see Appendix C for public and agency comments). Other outreach activities included:

- Written comment forms and interactive comment exercises at meetings
- Local officials meetings preceding the public information meetings
- Attendance at local committee meetings including plan commission meetings, as needed
- Stakeholder meetings with individual property owners with a direct impact/influence on the US 12 corridor
- Meetings with agencies and local government departments
- Two study newsletters providing information about the study
- An agricultural operations survey to identify priority areas for agricultural traffic

- Telephone interviews with local officials and other agencies as part of the agency coordination process
- Project website: http://www1.wisconsindot.gov/Pages/projects/by-region/sw/12nto26/default.aspx

Table 5 Public involvement history

Date	Activity	Invited/Attendees
March 23, 2011	Local officials/agency kickoff meeting	FHWA, local officials, WisDOT, TranSmart staff
April 2011	Newsletter	State & federal agencies, local officials, general public
April 18, 2011	Local officials/agency kickoff meeting	Local officials, WisDOT, TranSmart
April 20, 2011	Public information meeting	State & federal agencies, local officials, WisDOT, TranSmart staff, general public
April 21, 2011	Stakeholder meeting	Kevin Shelley, TranSmart staff
May 6, 2011	Local officials meeting	Jefferson County officials, WisDOT, TranSmart
January 28, 2014	Local officials meeting	Local officials, WisDOT, TranSmart
March 4, 2014	Public information meeting	State & federal agencies, local officials, WisDOT, TranSmart staff, general public

1.3 Spatial Information

Spatial information was obtained through cooperation with several agencies including:

- Dane County Land Information Office
- Jefferson County Land Information Office
- Wisconsin Department of Natural Resources
- Wisconsin Department of Transportation
- Wisconsin Historical Society
- National Resource Conservation Service

Spatial information is included as a supplement to this document on a flash drive that includes CADD and GIS data and PDF maps created as part of the study process. All GIS and CADD data included is in Wisconsin State Plan Coordinates (NAD 83 State Plane Wisconsin South). The flash drive is intended to serve as a resource that can be used in future decisions in the corridor (see Appendix K, *Compiled Data*).

2.0 Existing Conditions

2.1 Socioeconomic Conditions

General Economics and Economic Development

The study area is located on the eastern side of the Madison Metropolitan Area, and straddles Dane and Jefferson counties. Madison and adjacent communities including Middleton, Verona, and Fitchburg serve as the economic hub of the region, providing the second largest concentration of jobs in Wisconsin. It is the site of the state capital, and a primary political, medical, educational, and research center for the state, yielding very large numbers of jobs in these sectors compared to the state as a whole. In fact, Madison is a national center for scientific research in several disciplines. The high-paying jobs located in Madison exert a very powerful influence over the region, attracting workers from eight counties, which in turn generates high levels of peak-hour traffic from commuters traveling between their homes and jobs in the Madison region.

Cambridge was first settled in 1847 and grew as a site for lumber and grist mills and as a marketplace for area farmers. Tourism became prominent in the 1920s. Today tourism continues to play an important part in the community's economy which has been augmented in recent decades through Cambridge's growth as a bedroom community for those working in the Madison area, Fort Atkinson, and other nearby communities. (*Source*: Cambridge Chamber of Commerce website)

Deerfield, named for the abundance of deer there, first became a permanent settlement in 1843. By the 1950s Deerfield had become an established community at the time of the arrival of the predecessor to the Chicago & Northwestern Railroad, which provided passenger and freight service and connections to Madison, Milwaukee, and Chicago. The village was incorporated in 1891. The village has since evolved into the home of successful small manufacturers and a thriving bedroom community for many employed in the Madison area and Fort Atkinson. (*Source*: Wisconsin Historical Society website)

Fort Atkinson was first established as a military post during the Blackhawk War of 1832, and later grew as a settlement on routes between Janesville, Watertown, Whitewater, and Madison. Fort Atkinson has since evolved and grown as a center of manufacturing, food processing, and health services for southern Jefferson County. (*Source*: Wisconsin Historical Society website)

The first settlers to what is now the town of Koshkonong were attracted by the waterpower of the Bark and Rock rivers in the 1830s, and also grew as a place for agriculture, hunting and recreation. Dairy farming has been a prominent part of the economy for over a century. (*Source: Town of Koshkonong Comprehensive Land Use Plan 2010 – 2035*)

Table 6 on the following page lists the largest employers located within three miles of the study corridor. All are located within the city of Fort Atkinson except two employers in Deerfield, a Fort Healthcare facility and the Cardiac Sciences factory. Fort Healthcare is a large regional medical services corporation with multiple locations in Jefferson and Dane counties.

Table 6 Largest US 12 corridor employers in 2010

Employer Name	Location	No. of Employees	Revenues ($ millions)	Description
Fort Healthcare	Fort Atkinson	n.a.	n.a.	Medical services
Nasco International	Fort Atkinson	645	n.a.	Surgical & medical instr. mfg
Hydrite Chemical	Fort Atkinson	608	500 – 1000	Wholesale chemical merchandising
Spacesaver Storage Systems	Fort Atkinson	475	n.a.	Shelving manufacturing
Mc Cain Food	Fort Atkinson	350	100 – 500	Frozen food processing
Jones Dairy Farm	Fort Atkinson	350	20 – 50	Specialty food
Redi-Serve Foods	Fort Atkinson	300	100 – 500	Frozen food processing
Cygnus Business Media	Fort Atkinson	300	n.a.	Periodical publisher
Fireside Dinner Theater	Fort Atkinson	250	10 – 20	Restaurant
Opportunities, Inc.	Fort Atkinson	225	n.a.	Social advocacy organization
Fort Healthcare, Inc.	Deerfield	225	n.a.	Medical services
Cardiac Science Corp.	Deerfield	150	50 – 100	Surgical & medical instr. mfg

Source: Wisconsin Department of Transportation, Bureau of Planning

Communities with a regional influence on the transport of goods and services and on commuter travel patterns include the cities of Fort Atkinson and Madison, which can be viewed as proxies for job growth in the Madison metropolitan region and southwestern Jefferson County. The numbers of jobs at private employers in Madison and Fort Atkinson grew between 2002 and 2007, and this growth trend is expected to continue for the foreseeable future as both communities have dynamic and growing economies. The number of employees at private establishments in Madison grew from 113,848 in 2002 to 119,953 in 2007, while the number of employees at private firms in Fort Atkinson grew from 6,814 to 8,255 in the same period. Job growth in US 12 core cities such as Madison and Fort Atkinson portends increasing economic activity and commuting and thus growing traffic volumes along the US 12 corridor.

The median household incomes of nearly all corridor communities grew faster in the last decade (2000 to 2009) than the state as a whole, while incomes in Dane County communities grew faster than those in Jefferson County. Table 7 on the next page lists median household income data for all corridor communities, as well as for the counties and state. Median household incomes in both the town and village of Deerfield grew the most, at 35.8 and 33.5 percent, respectively, while household incomes in Cambridge and the town of Koshkonong grew the slowest. Incomes in Fort Atkinson, at the eastern terminus of the study corridor, grew at a very healthy rate of 20.2 percent during the decade.

Table 7 Median household incomes ($) in corridor communities

Community	2000	2009	Percent Change (2000 to 2009)
Town of Cottage Grove	71,007	85,769	20.8
Town of Deerfield	63,125	85,729	35.8
Village of Deerfield	50,439	67,313	33.5
Town of Christiana	56,042	65,500	16.9
Cambridge	52,039	57,083	9.7
Town of Oakland	54,412	62,500	14.9
Town of Jefferson	52,813	62,788	18.9
Town of Koshkonong	60,000	64,774	8.0
Fort Atkinson	43,807	52,651	20.2
Dane County	49,223	58,002	17.8
Jefferson County	46,901	53,261	13.6
State of Wisconsin	43,791	49,994	14.2

Source: U.S. Census Bureau

Community and Residential Elements and Environmental Justice

The size and composition of communities in the US 12 study corridor are important sources of data for future corridor planning. Community factors influence corridor conditions such as traffic volumes and patterns and can present opportunities for and constraints on future improvements. In this section, community populations and other demographic data are provided to enhance understanding of the corridor. Population data is useful for tracking the rate of community change, while detailed data on minority, low income, and elderly populations serve to identify the locations of populations that may be particularly sensitive or vulnerable to corridor changes.

Populations and Housing Units

With 18.3 percent growth between 1990 and 2010, the populations of communities within the US 12 corridor study area have grown slightly faster than Wisconsin as a whole (16.3 percent since 1990). Table 8 below details the population growth of study corridor communities. This growth comes within the context of the growth of both Dane and Jefferson counties, which have grown 33 and 23.5 percent, respectively, since 1990, rates that are much faster than the growth of the state as a whole. Dane County has been the fastest growing large county (among those with more than 100,000 residents) in Wisconsin since 1990. Within the corridor, Cambridge has experienced the greatest percentage growth since 1990 at 51.3 percent and Fort Atkinson the largest nominal growth with 2,141 residents. Growth in the village of Deerfield, just north of the study area boundaries, is also worthy of note at 43.4 percent since 1990. Among the towns in the corridor, the town of Deerfield has seen the largest percentage growth at 34.2 percent. The town of Jefferson, with a loss of population of 18.5 percent since 1990, was the only corridor community that lost population; it is possible that this population decline is at least partly due to annexation losses to incorporated municipalities.

Table 8 Corridor community populations

Community	1990	2000	2010	Percent Change (1990 to 2010)
Town of Cottage Grove	3,525	3,839	3,875	9.9
Town of Deerfield	1,181	1,470	1,585	34.2
Village of Deerfield	1,617	1,971	2,319	43.4
Town of Christiana	1,182	1,313	1,235	4.5
Cambridge	963	1,101	1,457	51.3
Town of Oakland	2,526	3,135	3,100	22.7
Town of Jefferson	2,673	2,265	2,178	-18.5
Town of Koshkonong	2,984	3,395	3,692	23.7
Fort Atkinson	10,227	11,621	12,368	20.9
Corridor communities total	26,878	30,110	31,809	18.3
Dane County	367,085	426,526	488,073	33.0
Jefferson County	67,783	74,021	83,686	23.5
State of Wisconsin	4,891,769	5,363,675	5,686,986	16.3

Source: U.S. Census Bureau

Growth of populations and housing units in each community are strongly correlated. Table 9 below details the growth of housing units in study corridor communities. Cambridge showed the largest percentage increase in corridor housing with 35.4 percent growth from 2000 to 2010 while the village of Deerfield had the second largest rate of growth at 21.6 percent. Fort Atkinson showed the most absolute growth in housing in the corridor during the period with 446 units. The sum of housing units in all corridor communities grew by 1,500 (12.3%).

Table 9 Housing units in study area communities

Community	2000	2010	Percent Change (2000 – 2010)
Town of Cottage Grove	1,356	1,495	10.3
Town of Deerfield	503	565	12.3
Village of Deerfield	749	911	21.6
Town of Christiana	492	497	1.0
Cambridge	483	654	35.4
Town of Oakland	1,437	1,621	12.8
Town of Jefferson	793	895	16.4
Town of Koshkonong	1,396	1,625	16.4
Fort Atkinson	4,983	5,429	9.0
Corridor communities total	12,192	13,692	12.3
Dane County	180,398	216,022	19.7
Jefferson County	30,092	35,147	16.8
State of Wisconsin	2,321,144	2,624,358	13.1

Source: U.S. Census Bureau

Environmental Justice Analysis: Low Income, Senior, and Minority Populations

The communities in the study area are not markedly different from the surrounding area or county as a whole. As data in table 10 indicate, the minority populations in these communities are very small. The proportion of the population in the study area communities that is from racial minorities is smaller than that of Dane and Jefferson counties or the state as a whole.

Table 10 Demographic characteristics of study area communities

Community	White	African American	Asian	Hispanic or Latino	American Indian	65 years and older
Town of Cottage Grove	3,825	32	59	66	6	419
Town of Deerfield	1,572	70	16	35	2	160
Village of Deerfield	2,218	23	19	76	15	171
Town of Christiana	1,202	13	2	8	0	174
Cambridge	1,410	13	7	25	4	202
Town of Oakland	3,021	12	12	53	8	474
Town of Jefferson	2,117	12	18	55	16	364
Town of Koshkonong	3,592	9	29	91	4	525
Fort Atkinson	11,439	77	88	1,128	40	1,811
Dane County	413,631	25,347	23,035	28,925	1,730	50,144
Jefferson County	78,131	628	551	5,555	212	11,042
State of Wisconsin	4,902,067	359,148	129,234	336,056	54,526	777,314

Source: U.S. Census Bureau

An analysis was conducted to identify concentrations of minority populations along the US 12 study corridor. Census block level data was used because it is the smallest level of data available from the U.S. Census Bureau that contains demographic data. The data was then evaluated through a multi-step process. First, the study area population was examined to determine a baseline for comparison. The population shares for each minority group within the study area were determined to establish study area thresholds for each minority group. Second, the share of a specific minority group for each block was determined by comparing the total number of persons in the block identified by race, according to the census data, with the total number of persons in the block. Shares of minority groups by census block were then compared to the shares of these groups at the study area level.

Figure 3 Census blocks with concentrations of minority populations

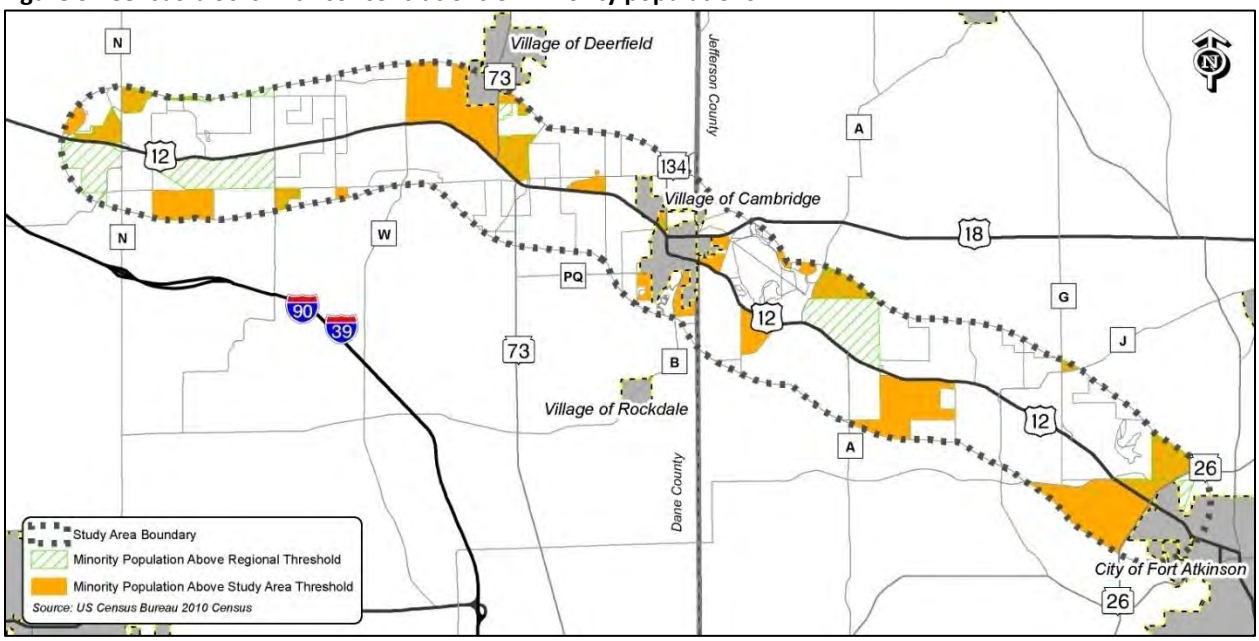

Table 11 below shows study area demographic data. The population shares reflect the thresholds at which a higher percentage of minorities indicates a potential concentration. Figure 3 depicts those blocks where percentages of minorities are higher than the study area shares, or thresholds. The Wisconsin Department of Transportation Southwest Region population data in the table are included for comparative purposes, showing how the study area compares to the Southwest Region as a whole.

Table 11 Study area demographic data

Population	Populations in study area	Share of populations in study area (%)	Populations in Southwest region	Share of populations in region (%)
Total	8,790	100.0	1,318,644	100.0
White	8,309	94.5	1,159,179	87.9
Black	137	1.5	48,625	3.7
Hispanic	225	2.6	61,778	4.7
Asian	72	0.8	36,681	2.8
Am. Indian	36	0.4	8,412	0.6
Other	1	NA	2,010	0.1

Source: U.S. Census Bureau 2010 Census

When compared to statewide populations, table 11 above indicates very low thresholds for identifying concentrations of minority populations in the study area. Therefore, relatively small minority concentrations within census blocks could exceed the shares of minority populations found in the study area as a whole. As can be seen in figure 3, there are a number of census blocks located along the US 12 corridor with minority concentrations higher than the study area thresholds. A

limitation of the analysis is that even though the concentrations might be high, the actual population within each block is relatively low. This suggests that, in the event of an improvement project or other action that would require statutory determination of populations, a windshield survey could be conducted to determine if the potential for disproportionate effects exists. This analysis tells us where to focus coordination efforts with minority populations.

The study area experienced a slight increase in population between 2000 and 2010. The senior population has remained stable as a share of the total population, with slight increases and decreases in some areas. Table 12 below illustrates the changes in shares of population 65 years and older from the 2000 Census to the 2010 Census. Within the villages of Deerfield and Cambridge senior populations have decreased in predominance since 2000. Fort Atkinson's senior population share has remained stable, while percentages of senior populations in rural towns have grown.

Table 12 Population 65 years and older in study area communities (percent)

Community	2000	2010	Change
Town of Cottage Grove	6.3	10.8	4.5
Town of Deerfield	8.6	10.1	1.5
Village of Deerfield	9.1	7.3	-1.8
Town of Christiana	10.7	14.1	3.4
Cambridge	19.5	14.1	-5.4
Town of Oakland	12.0	15.3	3.3
Town of Jefferson	14.0	16.7	2.7
Town of Koshkonong	11.1	14.2	3.1
Fort Atkinson	14.5	14.6	0.1
Dane County	9.3	10.3	1.0
Jefferson County	12.6	13.2	0.6
State of Wisconsin	13.1	13.7	0.6

Source: U.S. Census Bureau 2010 Census

Senior Housing Centers

Senior housing is defined as places where persons over the age of 65 reside in age-restricted developments. These developments and facilities include rental and condominium communities for active seniors, retirement homes, assisted-living centers, and nursing homes with 24-hour on-site medical assistance. There are two senior housing locations in the study corridor:

- Autumn Winds of Oakland, N3767 Airport Road, Cambridge
- Our House Assisted Living, 201 W Madison Street, Cambridge

Populations in Poverty (Low Income)

According to the 2006–2010 American Community Survey, the percentage of persons living in poverty within the study corridor communities was lower than the counties and state (see table 13). At that time, 11 percent of Dane County residents, 8.6 percent of Jefferson County residents, and 11.2 percent of all Wisconsin residents were living in poverty.

Table 13 Populations below poverty level (percent) in corridor communities

Community	Share
Town of Cottage Grove	0.5
Town of Deerfield	3.3
Village of Deerfield	5.8
Town of Christiana	6.8
Cambridge	4.6
Town of Oakland	8.0
Town of Jefferson	5.0
Town of Koshkonong	3.3
Fort Atkinson	10.8
Dane County	11.0
Jefferson County	8.6
State of Wisconsin	11.2

Source: 2006 – 2010 American Community Survey

Manufactured Housing Neighborhoods

There are two manufactured housing neighborhoods located in the study corridor: on US 12 at State Farm Road in the town of Christiana and on US 12 at Oestreich Lane in the town of Oakland. Manufactured housing neighborhoods typically offer housing choices that are less costly than traditional site-built housing. As a result, manufactured housing neighborhoods often are characterized by the predominance of low-income households. Retirees on fixed incomes and working-class families are common residents of these areas.

Schools

There are four school districts located within the US 12 study corridor: Stoughton, Deerfield, Cambridge, and Fort Atkinson (see figure 4). No schools are located directly adjacent to US 12. However, four schools are located near US 12 within the study area (listed in table 14 below). Three schools in Cambridge are located very close to US 12, while Fort Atkinson Senior High School is located one block from US 12 and just east of the study corridor's eastern terminus at WIS 26. The proximity of all four schools to US 12 has implications for student safety and the adequacy of safe crossings of the corridor between the schools and nearby neighborhoods.

Table 14 Schools in the study area

School	Location/District	Distance from US 12
Cambridge Elementary School	Cambridge School District	0.33 mile
Nikolay Middle School	Cambridge School District	0.10 mile
Cambridge High School	Cambridge School District	0.16 mile
Fort Atkinson Senior High School	Fort Atkinson School District	0.15 mile

Figure 4 School district boundaries

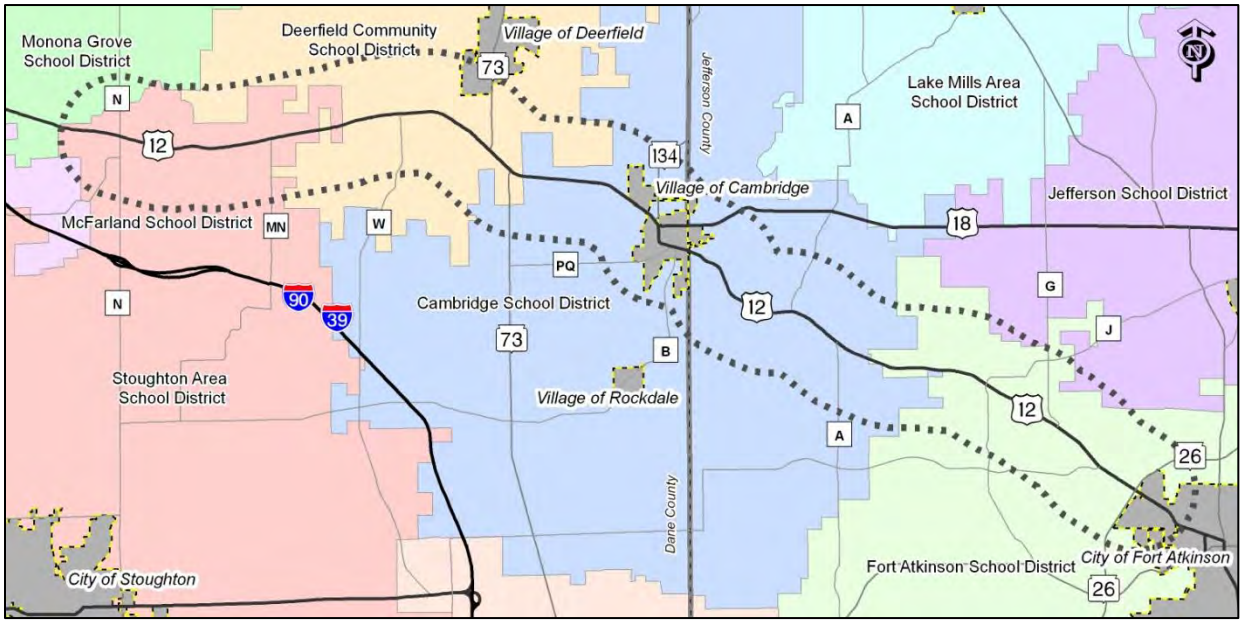

Agriculture

According to the 2007 U.S. Census of Agriculture, Dane County had 3,331 farms, with 535,756 acres used for farm activities, which is more than 70 percent of all land in the county. The market value of Dane County's agricultural products was $470 million in 2007, the highest of all Wisconsin counties. Jefferson County had 1,434 farms, with 244,238 acres in farm activities. The value of the county's agricultural products was $209 million. Table 15 below summarizes the acreages taken up by the primary crops and the total numbers of selected farm animals on farms in Dane and Jefferson counties. Corn, forage, and soybeans are the top three crops by acreage in both counties.

Table 15 Land in crops (acres) and selected farm animal totals for Dane and Jefferson counties

Product	Dane County	Jefferson County
Corn for grain (acres)	172,733	84,650
Corn for silage (acres)	32,780	8,378
Forage (acres)	76,970	27,321
Oats (acres)	2,428	1,272
Soybeans (acres)	71,664	40,458
Tobacco (acres)	679	7
Wheat (acres)	12,045	5,185
Vegetables (acres)	2,106	2,668
Hogs	21,977	7,435
All cattle	145,460	40,884
Milk cows	51,451	14,669

Source: 2007 Census of Agriculture

The success of agriculture in both Jefferson and Dane counties is partly due to the fact that they have some of the best farmable soils in the state. These soils are defined as Prime Farmland Soils by the U.S. Department of Agriculture, lands that have the best combination of physical and chemical characteristics for producing food, feed, forage, fiber, and oilseed crops. In addition to prime farmland soils, soils of statewide importance are also identified as important for farm activities. Soils of statewide importance are those that are nearly prime farmland and are able to produce high crop yields when treated and managed well.

Throughout the study area, agriculture is the most prominent land-use activity. *The Jefferson County Agricultural Preservation and Land Use Plan* outlines the county's agricultural land use policies, while the county's zoning code is the mechanism for preservation of agricultural lands. Most of the US 12 corridor area in Jefferson County is zoned Exclusive Agricultural. The US 12 study corridor spans a total of approximately 26,680 total acres. Prime farmland soils make up approximately 12,271 acres while farmland of statewide importance makes up 4,958 total acres; the sum of these lands is 17,229 acres or approximately 65 percent of the total land area within the study limits. Figure 5 on the next page illustrates the prime soils located in the US 12 study area. Prime farmland soils are present throughout the corridor, with the exception of lands in the vicinity of Lake Ripley near Cambridge.

Figure 5 Prime soils locations within the US 12 study area

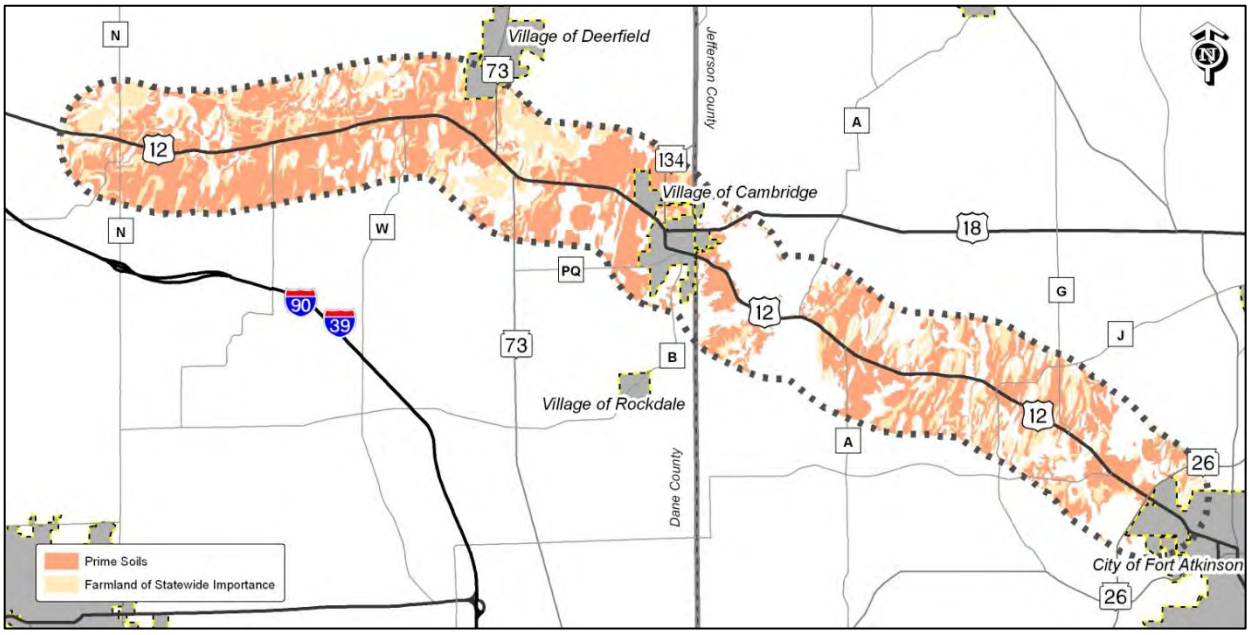

Agriculture Operations Survey

As part of this study, an agriculture operations survey was undertaken to determine the types and patterns of agricultural activities within the US 12 study corridor. The complete "US 12 Agriculture Operations Survey Report" can be found in Appendix D. The report provides survey results on farm activities and maps indicating the locations of owned and leased farmland and popular crossing points of US 12. Based on the survey results, US 12 is extremely important to agricultural operators in the corridor to access fields and transport farm inputs and products.

Among survey respondents, crops/produce is the most common farm activity occurring in the corridor (93% of all respondents), while only 29 percent of respondents indicated that they engage in dairy/cattle operations. More than half of corridor farmers rent or lease additional acreage, which often is dispersed on both sides of US 12. The size of farm operations in the corridor varies widely, with 36 percent of respondents indicating they farmed less than 300 acres while 50 percent reported that they farmed more than 1,000 acres. With such sizable operations spread out over several leased parcels within the corridor, many farmers must cross US 12 and access property adjacent to US 12 several times daily during peak activity seasons.

It is clear that US 12 is not only very important to farm operators within the corridor, but frequent conflicts between farm equipment and private automobiles and trucks using US 12 are likely. Primary access management considerations could include divergent vehicle speeds and vehicles turning at field and driveway access points and intersections. Therefore, the location of farm operations should be considered as part of any recommendations for access changes in order to minimize indirection for agricultural vehicles. Future decisions should balance agricultural needs with safety and operational needs along the corridor.

Archeological and Historic Resources

A preliminary investigation of historic and archaeological resources along US 12 was conducted. Data was obtained from the Wisconsin Historical Society's Architecture and History Inventory (AHI) database and Archaeological Sites Inventory (ASI). After collecting data from the Historical Society, a windshield survey of the corridor was conducted. Historic and potentially historic sites adjacent to the corridor are noted in table 16, as well as sites on the state and national registers of historic places (SRHP/NRHP) that are located within a block of the corridor. Many buildings with potential historic significance have been omitted due to significant architectural modifications. Figure 8 shows approximate locations of sites with potential historic value within the study corridor; numbers correspond to the sites listed in table 16.

Figure 6 Gangstad farmstead round barn

Sites listed on the NRHP must meet a specific determination of eligibility that begins with the State Historic Preservation Office (SHPO) and concludes with the National Park Service. Any site that is deemed eligible, or potentially eligible, is protected. Criteria for eligibility include:

- Structures that are at least 50 years old and have not been significantly altered in architectural integrity
- Structures or places that have national, state, or local historical significance due to events, people, or specific activities

Figure 7 Historic buildings in Cambridge and the town of Oakland

Table 16 Historic and potentially historic places

No.	Location	Name	Description	Listed
1	2396 Ofsthun Road, Cottage Grove	Buckeye School	Masonry school building	No
2	1668 US 12/18, Cottage Grove	Charles Patterson House	Farm house	No
3	3329 Cty Hwy BN, Cottage Grove	Nora School	School building	No
4	1326 US 12/18, Deerfield	Gangstad Farmstead	Farmstead with large circular barn	No
5	1241 US 12/18, Deerfield	Liberty School	Woodframe school (now tavern)	No
6	3495 Oak Park Road, Deerfield	Liberty School	Masonry school	No
7	3494 Oak Park Road, Deerfield	St. Paul's Liberty Lutheran Church	Masonry church and cemetery	No
8	US 12/18, Christiana	Thompson Farmstead	Farmstead	No
9	414 Water Street, Cambridge	Willerup United Methodist Church	Stone masonry church and cemetery	No
10	219 W. Main Street, Cambridge	Chris Legried Blacksmith Shop	Masonry building	No
11	214 W. Main Street, Cambridge	D.W. Scobie Wagon Works	Stone masonry industrial building	No
12	159 W. Main Street, Cambridge	Cambridge Mill	Stone masonry mill	No
13	128 W. Main Street, Cambridge	Bank of Cambridge	Stone masonry commercial building	No
14	103 South Street, Cambridge	Cambridge Public School and High School	Masonry school	SRHP/NRHP
15	106 Spring Street, Cambridge	Hauge Lutheran Church	Church	No
16	209 Park Street, Cambridge	Grace Lutheran Church	Church	No
17	123 E. Main Street, Cambridge	Ole Bilstad Residence	Frame house	No
18	216 E. Main Street, Cambridge	J.C. Dundas Residence	House	No
19	313 E. Main Street, Cambridge	Oakland-Cambridge Presbyterian Church	Church and cemetery	No
20	W9671 US 12, Oakland	Arthur Melster Residence	House	No
21	W9460 US 12, Oakland	Faith Evangelical Lutheran Church	Church	No
22	W9442 US 12, Oakland	Percy Saunders Residence	House	No
23	W9156 US 12, Oakland	Erastus Snell Farmstead	Multiple buildings	No
24	W8946 US 12, Oakland	Mary Black Farm	Barn and house	No
25	W8536 US 12, Oakland	Oakland Town Hall	Masonry building	No
26	W8524 US 12, Oakland	Free Will Baptist Church	Masonry building	No
27	N3237 CTH G, Oakland	C.J. Ward Creamery & Residence	House	No
28	W3104 & 3114 US 12, Jefferson	Stephan Ward Farmstead	Multiple buildings	No
29	W3059-3061 US 12, Jefferson	John Ward Farmstead	Multiple buildings	No

Note: NRHP=National Register of Historic Places; SRHP=State Register of Historic Places. *Source*: Wisconsin Historical Society

Figure 8 Historic and potentially historic places

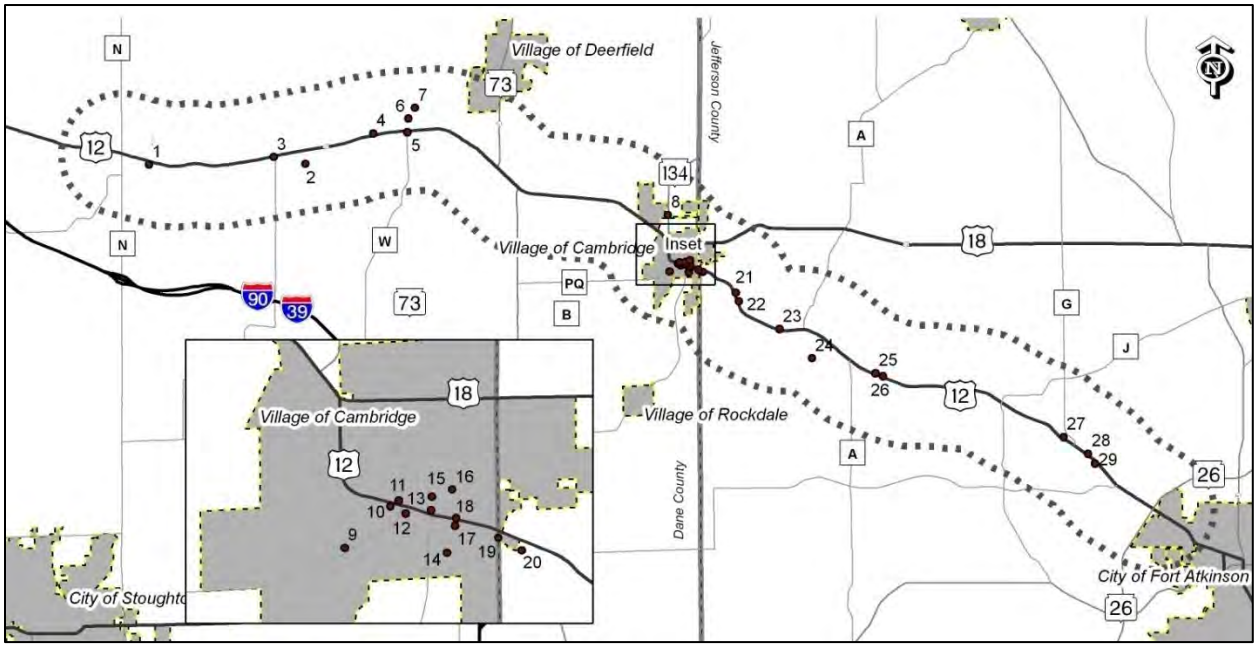

Table 17 provides results from the ASI database. Archeological sites are listed in the database if they have evidence of human burial and/or are places of cultural value, such as Native American activity or early European settlement. Sites can be prehistoric or historic and are generally protected under state and federal law. Consultation is required for many archeological and burial sites and at a minimum is requested by the WHS for any of the other sites. Cemeteries and some burial sites have also been identified by field survey and the ASI database. Table 17 includes cemeteries and burial sites located within one mile of the US 12 corridor.

Table 17 Previously recorded archeological resources

Location	ASI number	Name	Description
Cottage Grove	24976	Mary Black Burial Site	Isolated grave site
Cottage Grove	13815	Door Creek Cemetery	Cemetery
Cottage Grove	23650	Buckeye School Site	
Cottage Grove	12105	Prescott Mound Group	Burial site
Cottage Grove	13607	Liberty Prairie Cemetery	Cemetery
Cottage Grove	13608	Unnamed Cemetery	Cemetery
Cottage Grove	13609	One Stone Cemetery	Cemetery
Deerfield	13647	Liberty Lutheran Cemetery	Cemetery
Deerfield	13648	Deerfield Lutheran Cemetery	Cemetery
Deerfield	13603	Hauge (Oak Lawn/Union) Cemetery	Cemetery
Deerfield	27603	Finby	Lithic scatter
Deerfield	22122	Thompson Correctional Center 1	Farmstead
Christiana	12175	Severson	Campsite/Village
Christiana	68554	Scott VI	Scattered artifacts
Cambridge	13820	Millerup Scandinavian Methodist Cemetery	Cemetery
Cambridge	13645	St. Pius X Cemetery	Cemetery
Cambridge	14998	Lake Ripley Cemetery	Cemetery
Oakland	18850	Vernon Davis Site	Campsite Village
Oakland	18073	Olson	Campsite/Village
Oakland	18070	Radloff	
Oakland	67464	Ehrke I	Lithic Scatter
Oakland	67465	Ehrke II	Lithic Scatter
Oakland	29206	Rumpf Site	Lithic Scatter
Oakland	19300	Falk Site	Campsite/Village
Oakland	19292	Red Cedar Lake Waterfowl Production Area Site I	Campsite/Village
Oakland	19293	Red Cedar Lake Waterfowl Production Area Site 2	Campsite/Village
Oakland	19299	Red Cedar Lake Waterfowl Production Area Site 3	Campsite/Village
Oakland	18851	Pruefer find spot	
Oakland	18849	Krippner Site	Campsite/Village
Oakland	18069	Ferry	
Oakland	18072	Unnamed site	
Oakland	12839	Unnamed site	
Oakland	18848	Rivendell Site	Campsite/Village
Oakland	14908	Oakland Center (Free Will Baptist) Cemetery	Cemetery
Oakland	28287	Unnamed site	
Oakland	28359	Unnamed site	
Oakland	15001	Union Cemetery	Cemetery
Oakland	29775	Newcomb	Status Unknown
Oakland	29776	Rehm	Lithic Scatter
Oakland	24658	Ward Mounds	
Jefferson	19287	Holwis	
Jefferson	29774	Zemel	
Jefferson	19288	Beane	Workshop Site

Source: Wisconsin Historical Society

The Wisconsin Department of Transportation has conducted several surveys along the corridor in the past thirty years. However, only structures with historic or potential historic significance have been included in this report.

The review of sites along the length of the corridor is not intended to replace a comprehensive environmental review and documentation. Historic and cultural resource surveys should be conducted prior to any US 12 improvements to determine the presence of important archeological, historical, or architectural resources. Such studies might be required under the National Environmental Policy Act (NEPA) Wisconsin Environmental Policy Act (WEPA), Section 106 of the National Historic Preservation Act, and Section 4(f) of the Department of Transportation Act of 1966.

Hazardous Materials

A report identifying potential hazardous materials sites (i.e., those containing or potentially containing a substance that could be harmful to people or the surrounding environment) was obtained from FirstSearch Technology Corporation (FirstSearch) and included all sites within ½-mile of the corridor that were listed in state and federal environmental databases. The full FirstSearch report can be found in digital Appendix K. The report identified 170 sites within ½-mile on either side of the US 12 centerline:

- Six facilities that generate (GEN) hazardous waste or meet Resource Conservation and Recovery Act (RCRA) requirements were identified.
- Fourteen facilities that at one time generated hazardous waste or now generate (RCRA NLR) such a small amount they do not fall into a category defined in the Resource Conservation and Recovery Act (RCRA) requirements.
- Seventeen sites were identified as having a hazardous materials release (State Spills 90/State Spills 80).
- Fourteen sites were identified on the WDNR Solid Waste Landfills (SWL) list.
- Twenty-three sites were identified for leaking underground storage tank (LUST) incidents.
- Ninety-one sites contained registered aboveground/underground storage tanks (AST/USTs).
- One site was identified on the WDNR Bureau of Remediation and Redevelopment Tracking (IC) list (sites with deed restrictions at closeout).
- Sixteen sites are listed on the WDNR database of non-LUST cleanup sites (State Other).

Of the 170 sites identified within ½-mile of the US 12 centerline, seven sites are located along US 12 (see table 18); 74 sites are located within ⅛-mile of US 12; 15 sites are located between ⅛-mile and ¼-mile from the highway; and 29 are located between ¼-mile and ½-mile. Forty-five of the sites identified by FirstSearch are not mapped, as their exact locations were unidentifiable; however, these sites were listed in the same zip code as the study corridor and are included in the FirstSearch report. Sites described as closed in table 18 are located adjacent to US 12. The sites described by FirstSearch are shown in exhibit 1.

Table 18 Potential hazardous materials sites

Number	Name	Location	Database	Status
1	1.25 Miles West of County N	US 12/18	SPILLS	Closed
2	US 12 and County N	US 12/County N	SPILLS	Closed
3	Clayton Kittleson	2074 US 12/18	UST	Closed
4	Kent R Karberg	355 US 12/18	UST	Closed
5	Pammi Sekhon	210 N Main Street	UST	In use
6	Bamletts Gas N Stuff	210 N Main Street	LUST	Conditionally closed
7	Cambridge Park Antiques	US 12 and Park Street	LUST	Open

Source: FirstSearch Technology Corporation. Note: Sites with hazardous materials release (SPILLS), leaking underground storage tank (LUST), and underground storage tank (UST).

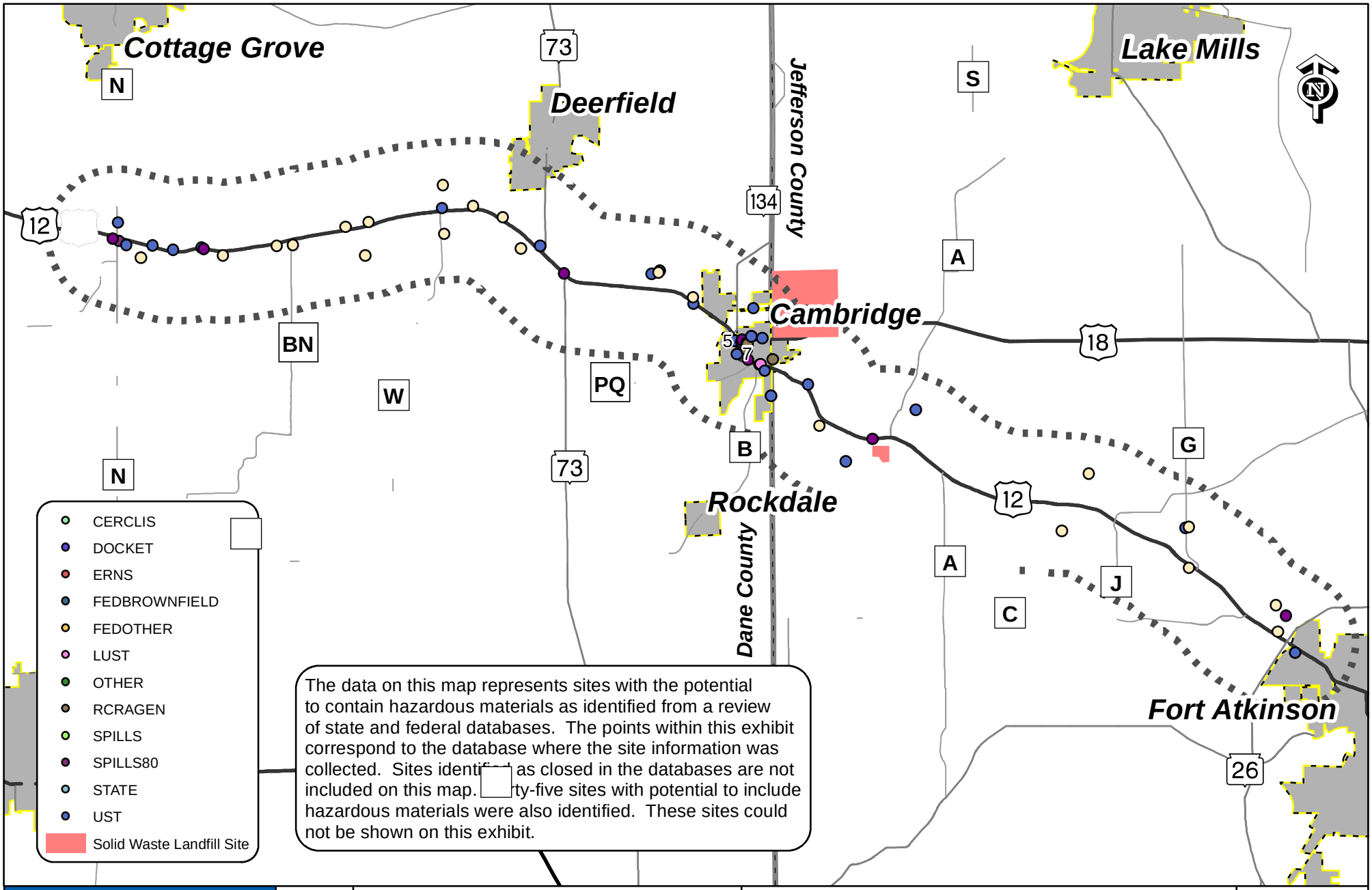

TranSmart	Not to Scale	US 12 Corridor Study	Potential Hazardous Materials Sites	Exhibit 1

The numbered points on this exhibit correspond to the open sited along US 12 identified in the table on the previous page.

In addition to the FirstSearch report, the Wisconsin Department of Natural Resources Bureau of Remediation and Redevelopment (WDNR BRRTS) database, the EPA Envirofacts site, the Wisconsin Department of Commerce Petroleum Tanks database, and the WNDR Solid and Hazardous Waste Information System (SHWIMS) were manually searched for additional information regarding the potential for contaminated materials within a half-mile of the US 12 corridor centerline. A field review to evaluate the potential for non-recorded hazardous sites was also conducted. Twenty Above-ground Storage Tank (AST) sites were identified within ½-mile of the US 12 centerline. All of the twenty AST sites were a part of agricultural operations. In addition, an auto salvage yard was identified during the field review. The salvage yard contains salvaged vehicles as well as numerous mini-bulk hazardous material storage containers. Locations of sites inventoried during the field review can be seen on exhibit 1. All sites within the study corridor can be found in digital Appendix K.

The searched databases include both current and past sites, sites that have undergone remediation and have been closed by the appropriate regulatory agency, and sites that are currently open. Listed sites include those that have stored hazardous substances and/or petroleum products and have an existing release, a past release, or material threat of a release into the soil, groundwater, or surface water. However, the listing of a site on a particular database does not always indicate a violation or a release at that site, and sites that have reported violations or releases do not necessarily pose an environmental hazard to the surrounding area. Likewise, sites that have undergone remediation or have not reported violations or releases may still pose a threat.

This assessment is for planning and reference purposes and is not intended to fulfill the requirements for a Phase 1 Environmental Site Assessment as described in ASTM Practice E 1527-05.

Aesthetics

The US 12 study corridor falls entirely within the Southeast Glacial Plains ecological landscape, an area of the state having rich soils, prosperous agriculture, and aquatic resources that support a diversity of species and recreational activities. Most of the original native forests, prairies, and wetlands have been removed or drastically altered by human activities. Because the most recent glacial period scrubbed the region of topographical extremes, the terrain is largely flat or gradually sloping with some moraines and kettles dotting the landscape. Exhibit 2 on the following page provides an overview of the corridor and its topography; locations have been numbered on the exhibit to correspond with photographs provided in this section.

At County N, the western terminus of the study area, the terrain is flat to gently rolling amongst a rural environment of medium-sized family farms. The US 12 interchange with County N, to include an overpass of the four-lane divided expressway with median, is the most prominent man-made feature in the vicinity. The four-lane expressway merges to a two-lane roadway about three-quarters of a mile east of County N. Rural residential and farmstead structures are scattered amidst the crop fields, some located very close to the US 12 right of way. Mildly rolling crop fields are interspersed with small woodlots composed of deciduous trees. Small-scale utility poles and power lines run parallel to the south edge of the roadway for several miles. Several red and white barns, many possibly having historic value, are prominent man-made features within and near the corridor.

Figure 9 View of the US 12 corridor near County N (photos 1 and 2)

East of North Star Road, US 12 narrows from four lanes to two about 3/4-mile east of County N. The field of vision narrows considerably, as trees appear closer to the road and the road curves slightly to the south, then north. US 12 is the most prominent manmade feature in the vicinity. The two-lane road here is at least 24 feet wide with ten feet of paved and gravel shoulder on each side. The road then straightens in an east–northeast direction. A small cemetery on a woodlot, Liberty Prairie Cemetery, is located adjacent to the south side of US 12, where the road curves gently to the north. Just past the cemetery, the vistas on both sides of the road open up to reveal crop fields on rolling plains. Modern and late 19th Century farm buildings, houses, and small woodlots close to the road intersperse the crop fields.

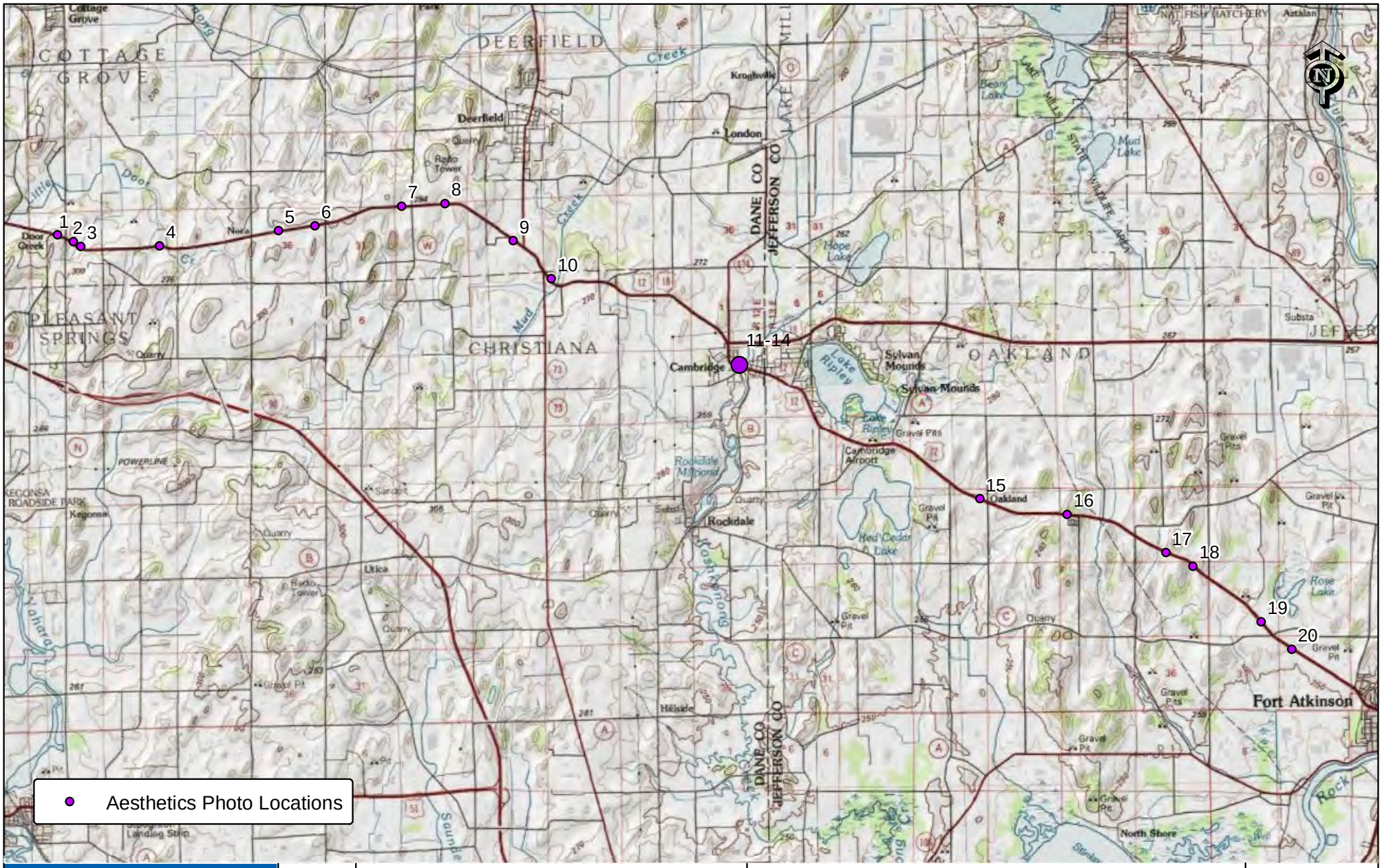

TranSmart	Not to Scale	US 12 Corridor Study	Aesthetic Overview and Topographical Map of the Corridor	Exhibit 2

Figure 10 US 12 corridor in the town of Cottage Grove (photos 3 and 4)

At the intersection of US 12 and County BN/Nora Road, there is a small concentration of buildings near the roadway, with a low-profile commercial building (Nora's Tavern) occupying the southeast corner. East of County BN/Nora Road US 12 is straight and the terrain is flat amongst crop fields and family-scale farmsteads. One-half mile east of Nora Road, a small wooded cemetery is located next to the south side of US 12. Just east of Deerfield Road, US 12 curves gently to the north. An older wooden peaked-roof red farm structure can be seen close to the south side of US 12. Utility poles can be found on either side of the highway.

Figure 11 Views near County BN (photos 5 and 6)

Between Thorstad Lane and County W/Oak Park Road, US 12 curves gently to the east and south amidst relatively flat crop fields. Small wooded hills, possibly drumlins, can be seen in the middle distance north and south of the highway. There is a small commercial building and parking lot in the southeast corner of US 12 and County W. East of County W there is a slight increase in elevation as US 12 climbs a modest hill. The highway is cut into the hill at a maximum of ten feet at the crest of the hill, obscuring the vista for about 300 feet. US 12 curves even more to the south east of Sunny

Lane then flattens and straightens to the southeast. Several older tobacco barns and modern farm buildings are located within 200 feet of both sides of the highway.

Figure 12 Views in the town of Deerfield (photos 7, 8, 9 and 10)

A modern bank branch and Hauge Cemetery are located on the north side US 12 at the WIS 73 north leg intersection. East of the WIS 73 south leg intersection, the terrain becomes slightly hillier and US 12 curves again to the east (left). Small forested patches are more common in this area. A manufactured-home park can be seen on the north side of US 12 just east of the State Farm Road intersection. High-voltage power lines pass over US 12 about ¼-mile east of State Farm Road.

As US 12 approaches Cambridge, the highway curves to the southeast again and more buildings and billboard signs populate the landscape. A small auto salvage lot is located on the north side of US 12. A used auto dealer's lot is located just east of Rodney Road. Additional commercial buildings are located on the north side of US 12 in the vicinity Kenseth Way. East of Kenseth Way, the highway gains a painted median and the US 12 corridor is clearly urbanizing, especially in the vicinity of WIS 134. US 12 enters the village of Cambridge at the US 18 intersection where there are several auto-oriented commercial businesses such as a fuel station, supermarket, convenience store, and sandwich shop.

Figure 13 Main Street in Cambridge (photos 11, 12, 13, and 14)

East of US 18, US 12 is Cambridge's Main Street, where commercial buildings and houses are placed close together and located adjacent to the highway. US 12 intersects several closely-spaced side streets that lead to Cambridge's neighborhoods. Most houses along US 12 are older two-story wood-frame houses that predate 1940. Mature trees line the road and a sidewalk is located on its south side.

Madison Street divides the residential district and Cambridge's commercial district. A fuel station, church, and bank branch transition into the downtown. Where US 12 crosses Koshkonong Creek the bridge is apparent but the creek itself is not, sitting several feet below the surface of the road and obscured by trees. East of the creek vehicle parking is permitted along US 12. In the downtown, many commercial buildings are sited directly adjacent to sidewalks and the Main Street right of way, creating a mild urban canyon. Several buildings are constructed of masonry and appear to potentially have historic value. Pedestrian crosswalks are common. East of the downtown, the atmosphere transitions to lower density commercial and residential along a Main Street lined with mature trees.

East of Cambridge houses are spaced further apart. The Lake Ripley Country Club golf course can be seen on the south side of the highway. Large lot residences and small auto-oriented commercial businesses are located in this area. East of Park Road the speed limit rises to 45 mph and US 12 curves to the south/southeast. The highway is lined by thickly wooded properties on both sides. Although Lake Ripley is located on the north side of US 12, it cannot be viewed from the highway when leaves are on the trees.

Not far past Cambridge and just east of the golf course, the view from the highway opens up. On the south side of US 12 east of Airport Road, Red Cedar Lake and its adjacent undisturbed wetlands (the Red Cedar Lake State Natural Area) are seen immediately next to the highway right of way, providing a stark contrast to the large-lot houses and manicured lawns located on the north side of US 12. East of the north leg of County A, the topography is somewhat more varied and hilly, and the highway climbs and descends modest hills. Short retaining walls can be seen on both sides of the highway as it passes through a modest cut, and continues an ascent up a long gradual climb. Farmland becomes much more apparent here, on both side of the highway. Rolling hills of crop fields interspersed with small tree lots become more common. East of County A, the paved shoulder widens to eight feet along with two feet of gravel shoulder. Along the north side of US 12 at Oakland Road, the small cluster of houses and commercial buildings that comprise Oakland Center comes into view. East of Oakland Road, views of mildly rolling cropland and small hilly woodlots continue. A manufactured housing community can be seen on the south side of US 12 at Oestreich Lane at the edge of a large wooded area. Deep woodlots and retaining walls line both sides of the highway east of Oestreich Lane for about a quarter-mile as the highway passes through a hill cut. The vista opens up again to cropland as the highway descends. Passing Ehrke Road, the highway ascends a hill and curves slightly to the southeast.

Figure 14 Oakland Center and Oestreich Lane (photos 15 and 16)

Figure 15 Between County J and County C (photos 17 and 18)

At the intersection with County J, the landscape is mildly rolling with tree lots interspersed with cropland. Busy Barns Adventure Farm can be seen on the south side. Wooded drumlins are visible in the middle distance on both sides of US 12. Approaching County G, US 12 descends and curves gradually north, then south. Between County G and County C, several small woodlots located next to the highway reduce the scope of the vista available from US 12. In the vicinity of Dorothy Carnes County Park, the vista opens up again and the terrain flattens, opening up a wide view of the countryside.

A commercial building and small cluster of houses can be seen at three of the four corners of the intersection with County C/Hoard Road. East of County C, cropland is visible on both sides of US 12 with tree lots and tree lines at the highway and in the middle distance. Less than a half-mile from WIS 26, US 12 transitions to a four-lane divided expressway with median and the highway takes up a larger share of the forward vista. The WIS 26 overpass of US 12 and supporting embankments can be seen in the distance, delineating the horizon at the Fort Atkinson city limits. Crop fields continue right up to the WIS 26 ramps, and commercial buildings can be seen underneath and beyond the overpass.

Figure 16 County C area; four-lane roadway near WIS 26 (photos 19 and 20)

2.2 Environmental Conditions

Wetlands

Wetlands can be defined as an area where water is at or near the soil surface during a period of time long enough to support hydrophytic (water-loving) vegetation. In Wisconsin, these areas vary greatly from seasonally-saturated to permanently-inundated areas.

Wisconsin currently contains an estimated 5,385,290 acres of wetland or roughly 15 percent of the surface area of the state. In contrast, the total surface area of Dane County is 769,392 acres and, of that, approximately 51,418 acres (6.7%) is wetland. The surface area of Jefferson County is 356,521 acres while 59,280 (16.6%) acres of the total are wetland. An estimated 1,035 acres of wetland were identified within the study corridor, representing approximately 0.01 percent of Wisconsin's estimated wetlands. Table 19 below lists wetland types that exist in the study area.

Table 19 Wetland types in the study area

WisDOT Wetland Type	Wisconsin Wetland Inventory (subclasses and modifiers)	Approximate acreage
M Wet Meadow	E(1,2,3)K E(1,2,3)K(a,f,g,v)	2236
RPF Riparian Forested	T(1,2,3)K, S(1,2,3)K, (w,s)	571
SS Shrub Scrub	S(1,2,3,4,5,6)K	850

Source: Wisconsin Wetlands Inventory and TranSmart Technologies Inc.

Locations of wetlands within one-mile from the US 12 study corridor centerline were identified using the Wisconsin Wetland Inventory (WWI), aerial photography and topographic maps. WWI wetland classifications were converted to WisDOT wetland bank types. A field review was also conducted within ½-mile of the US 12 corridor centerline. Boundaries of previously identified wetland areas were reduced and/or extended based on observed site conditions (see exhibit 3 on the following page). *Wetland boundaries were not determined based on regulatory wetland delineation methods. The information gathered is meant to give an estimate of the wetland acreage and type that may be located within the study area and is intended for planning purposes only.*

Exhibit 3

Wetlands, Open Water, Rivers and Streams

US 12 Corridor Study

Not to Scale

TranSmart

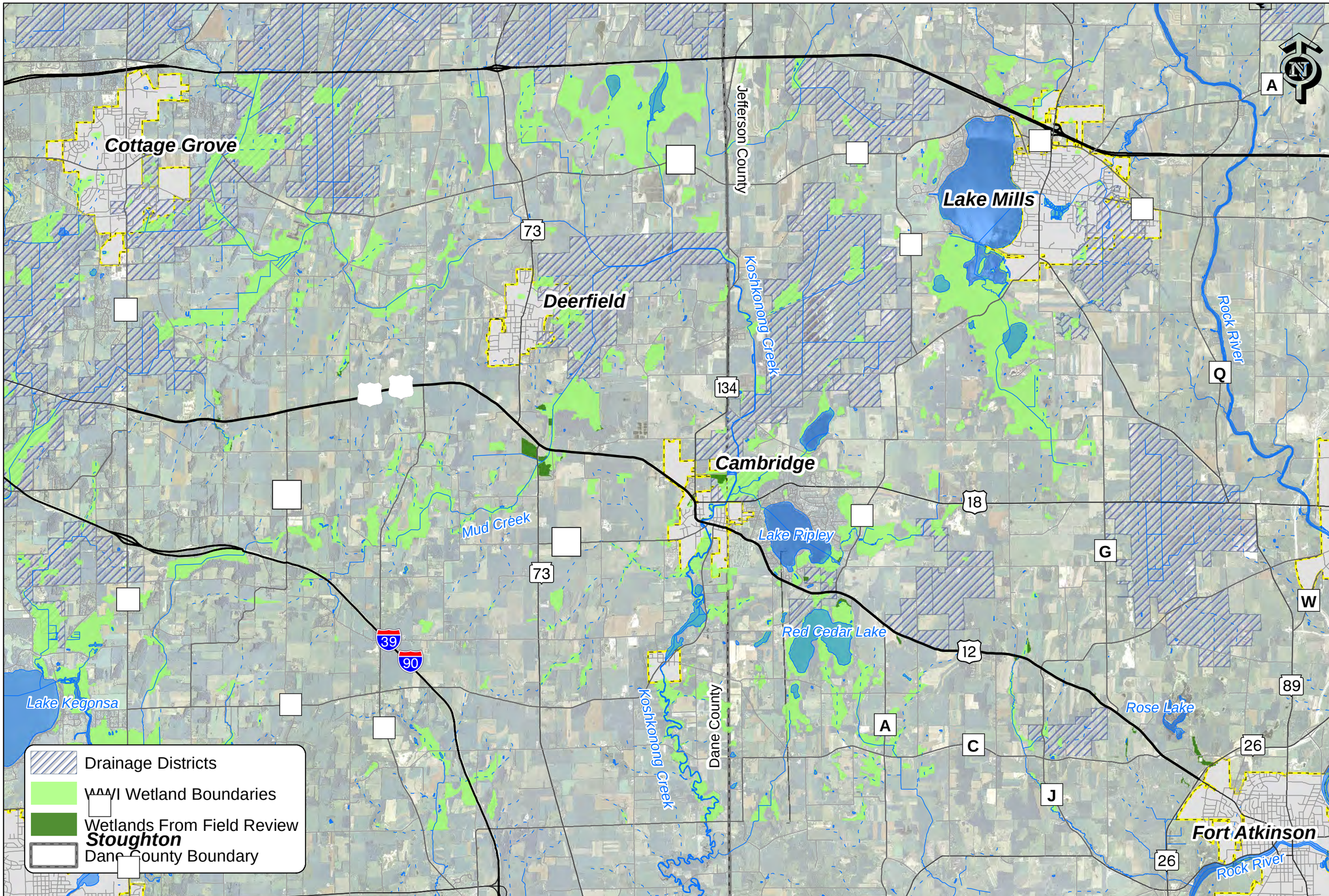

Based on the wetland data reviewed, approximately 571 acres of riparian forested wetlands, 850 acres of shrub swamp, and 2236 acres of wet meadow are located within the US 12 study area.

Riparian Forested Wetland (RPF)

This classification of wetlands includes wooded riparian wetlands, floodplain forests, shrub carrs, and alder thickets in a riverine or lacustrine system. These wetlands range from temporarily or permanently saturated to seasonally inundated and are dominated by deciduous hardwoods greater than 20 feet in height. Vegetation representative of RPF wetlands include silver maple, green ash, river birch, eastern cottonwood, American elm, and black willow. The herbaceous undergrowth can range in diversity dependent on the degree and length of saturation or inundation.

Shrub Scrub (SS)

This classification of wetlands includes shrub swamp, shrub carr, and alder thickets characterized by vegetation dominated by young trees and shrubs less than 20 feet in height. Hydrology ranges from temporarily or permanently saturated to seasonal or permanent inundation. The shrub layer of these wetland communities are dominated by willow, dogwood, and alder; the herbaceous layer is typically dominated by a diversity of sedges, rushes, grasses, and forbs.

Wet Meadow (M)

This classification includes wet and sedge meadows, wet prairies, vernal pools, and fens dominated by herbaceous plants and characterized by hydrology ranging from seasonal saturation to temporary inundation. Depending on the location and land uses surrounding these wetlands, vegetation may be comprised of a rich diversity of sedges, grasses, rushes, and forbs, or instead may be dominated by a monotypic stand of cattail or wide spread distribution of reed canary grass.

The wetlands described above are important features to the ecosystem and landscape of the US 12 study area as well as the state of Wisconsin as a whole. WisDOT has partnered with WDNR to develop a cooperative agreement between the agencies to mitigate wetland impacts. As a result of the cooperative agreement, a document called *Wisconsin Department of Transportation Wetland Mitigation Technical Guideline* was developed with cooperation from WDNR, U.S. Army Corps of Engineers (USACE), U.S. Environmental Protection Agency (EPA), U.S. Fish and Wildlife Service (FWS), and the Federal Highway Administration (FHWA). The purpose of this document is to outline WisDOT's procedures for wetland mitigation. WisDOT's wetlands mitigation policy can be found in Appendix B, while the digital Appendix K includes a complete copy of *Wisconsin Department of Transportation Wetland Mitigation Technical Guideline.*

Open Water, Streams, and Floodplains

WisDOT FDM Procedure 24-5-5 discusses potential impacts that highway projects could have on rivers, streams, and lakes. *Rivers or streams* are defined as either naturally occurring or human-made watercourses that have distinguishable beds and banks and a flow gradient (horizontal movement of water). They are components of a drainage basin in a watershed and usually serve as habitat for aquatic species. *Lakes* are bodies of water formed in depressions of the earth's surface. Exhibit 3 includes open water, streams, and floodplains located in the study area.

Open Water

The Southeast Glacial Plains have the highest aquatic productivity for plants, insects, invertebrates, and fish of any ecological landscape in the state. Most riparian zones have been degraded through forest clearing, urban development, and intensive agricultural practices. The ecological landscape contains several large lakes, including those in the Madison area and in the Lake Winnebago Pool system. These lakes are important to many aquatic species including the lake sturgeon. Kettle lakes are common on end moraines and in outwash channels. The landscape also contains important fens, tamarack swamp, wet prairies, and wet-mesic prairies that contain rare plants and animals. However, most wetlands have experienced widespread ditching, grazing, and infestation by invasive plants. Watershed pollution in the ecological landscape is about average according to rankings by Wisconsin DNR, but groundwater pollution is worse than average compared to the rest of the state. (*Source*: WDNR Ecological Landscapes)

There are three open water features located within the study area: Lake Ripley and Red Cedar Lake in the Cambridge area and Rose Lake in the town of Jefferson. Lake Ripley is a small kettle (418 acres) known for its water quality and sport fishery. It is developed on the west, north and south sides, while there is a wetland on the undeveloped east side. Red Cedar Lake (359 acres), located entirely within the Red Cedar Lake State Natural Area, is an undeveloped shallow hard water seepage lake that provides excellent habitat for waterfowl and marsh birds. It has a maximum depth of six feet, and 90 percent of the lake is less than three feet deep. Rose Lake (8 acres) is located within the Rose Lake State Natural Area in the town of Jefferson and has a maximum depth of five feet. Rose Lake is noted for its rich underwater and floating mat aquatic plant communities. The exposed mud flats attract numerous shorebirds such as pectoral sandpiper, least sandpiper, solitary sandpiper, and lesser yellowlegs. (*Source*: Feasibility Study and Master Plan and Environmental Impact Statement for the Proposed Glacial Heritage Area, WDNR)

Streams

The US 12 corridor is located in the Lower Rock River Basin, which is part of the Mississippi River Greater Basin. Portions of the US 12 study area drain into the Yahara River, Upper Koshkonong Creek, and Rock River watersheds. Table 20 on the following page lists streams that cross US 12 within the study area.

Table 20 Stream crossings

WBIC #	Stream Name	Location
5036119	Unnamed	1400 ft east of County N
5036224	Unnamed	3000 ft east of North Star Rd
802900	Little Door Creek	4400 ft east of North Star Rd
810300	Mud Creek	190 ft west of Fadness Rd
808800	Koshkonong Creek	480 ft west of County PQ
5036638	Unnamed	150 ft west of Ehrke Rd
813400	Unnamed	320 ft east of Ehrke Rd
5036773	Unnamed	2200 ft east of County J

Source: WDNR Surface Water Data Viewer

Floodplains

Floods are Wisconsin's most common natural disaster and therefore require land use plans to minimize their effects. Benefits of floodplain management include the reduction and filtration of sediments into area surface waters, storage of floodwaters during regional storms, habitat for fish and wildlife, and reductions in direct and indirect costs due to floods.

The Federal Emergency Management Agency (FEMA) designates floodplain areas. A flood is defined as a general and temporary condition of partial or complete inundation of normally dry land areas. The area inundated during a flood event is called the floodplain.

The floodplain includes the floodway, the flood fringe, and other flood-affected areas. The floodway is the channel of a river and the adjoining land needed to carry the 100-year flood discharge. Because the floodway is characterized by rapidly moving and treacherous water, development is severely restricted in a floodway. The flood fringe, which is landward of the floodway, stores excess floodwater until it can be infiltrated or discharged back into the channel. During a regional flood event, also known as the 100-year, one percent or base flood, the entire floodplain or Special Flood Hazard Area (SFHA) is inundated to a height called the regional flood elevation (RFE). (*Source*: WDNR Floodplain & Shore land Zoning Guidebook)

Floodplain areas generally contain important elements of the natural resource base such as woodlands, wetlands, and wildlife habitat. Therefore, they constitute prime locations necessary for park, recreation, and open space areas. Every effort should be made to discourage incompatible urban development of floodplains and encourage compatible park, recreation, and open space uses. (*Source*: WDNR Floodplain & Shore land Zoning Guidebook)

Most of the US 12 study corridor lies beyond 100-year floodplains documented by FEMA. Floodplains in the US 12 study corridor tend to be located in areas surrounding creeks and streams such as Door Creek, Mud Creek, and Koshkonong Creek and the larger documented wetlands. (*Source*: Federal Emergency Management Agency)

Drainage Districts

Nearly one-third of Wisconsin's farms use small-scale drains to remove excess water from the land. The study area includes seven drainage districts: Door Creek in Dane County, and numbers 2, 15 Main, 27, 28, 30, and 38 in Jefferson County. Exhibit 3 shows the locations of drainage districts.

Upland Habitat

The entire study corridor falls within the Southeast Glacial Plains ecological landscape, which makes up the bulk of the non-coastal land area in southeast Wisconsin and is made up of glacial till plains and moraines. Soils are lime-rich tills overlain in most areas by a silt-loam loess cap. Agricultural and residential interests throughout the landscape have significantly altered the historical vegetation. Most of the rare natural communities that remain are associated with large moraines or in areas where the Niagara Escarpment occurs close to the surface.

Historically, vegetation in the Southeast Glacial Plains consisted of a mix of prairie, oak forests and savanna, and maple-basswood forests. Wet-mesic prairies, southern sedge meadows, emergent marshes, and calcareous fens were found in lower portions of the landscape. End moraines and drumlins supported savannas and forests. Agricultural and urban land use practices have drastically changed the land cover of the Southeast Glacial Plains since Euro-American settlement. The current vegetation is primarily agricultural cropland. Remaining forests occupy only about 10 percent of the land area and consist of maple-basswood, lowland hardwoods, and oak. No large mesic forests exist today except on the Kettle Interlobate Moraine which has topography too rugged for agriculture. Some existing forest patches that were formerly savannas have succeeded to hardwood forest due to fire suppression. (*Source*: WDNR Ecological Landscapes)

Natural Communities

Fourteen natural communities have been identified by the WDNR Natural Heritage Inventory (NHI) to be located within the US 12 study corridor. Natural communities are important for supporting species under distress and others of concern to the state. Definitions of these community types can be found online at the Wisconsin Department of Natural Resources Endangered Resources Program website (http://dnr.wi.gov/topic/endangeredresources/communities.asp). Additional consultation with federal, state, and local agencies may be necessary to determine the likelihood of communities still occurring and to verify that other sensitive communities do not exist within the study corridor. The fourteen natural communities found in the US 12 corridor include:

- Dry prairie
- Emergent marsh
- Lake—shallow, hard seepage
- Lake—hard bog
- Northern wet forest
- Oak opening
- Open bog
- Shrub-carr
- Southern dry forest
- Southern dry-mesic forest
- Southern sedge meadow
- Stream—slow, hard, warm
- Wet-mesic prairie
- Wet prairie

Threatened and Endangered Species and Species of Special Concern

According to information provided by the Wisconsin Department of Natural Resources (WDNR) in its October 2009 update to the Natural Heritage Inventory (NHI), 24 threatened, endangered, and special concern species have been previously identified within the US 12 study corridor. The documented occurrence of a species does not mean that the species or natural area is still located within the study corridor and, likewise, the absence of documentation does not eliminate the potential for other threatened, endangered, and special concern species, and natural areas to be located within the corridor. Due to the sensitivity of these species and/or communities, the exact location cannot be disclosed and further regulatory communication is recommended to avoid impacts to these species if construction is to occur within the study area. Additional information regarding these species and sensitive communities can be found on the WDNR Natural Heritage Inventory website. *Information contained within this report or derived from the website should be used as guidance during planning and is not intended to fulfill WEPA or NEPA requirements.*

Based on NHI data for Dane and Jefferson counties, one endangered, eight threatened, and fifteen special concern species have been documented. A list of the species documented in the study corridor is provided in table 21. For locations of species by town and range, see Appendix E, *Threatened and Endangered Species Summary*.

Table 21 Threatened and endangered species and species of concern within the study corridor

Scientific Name	Common Name	Group	Status
Agastache nepetoides	Yellow Giant Hyssop	Plant	THR
Agrimonia parviflora	Swamp Agrimony	Plant	SC
Arigomphus submedianus	Jade Clubtail	Dragonfly	SC/N
Bessaya bulii	Kitten Tails	Plant	THR
Cacalia tuberose	Prairie Indian Plantain	Plant	THR
Cardamine pratensis	Cuckooflower	Plant	SC
Chlidonias niger	Black Tern	Bird	SC/M
Coccyzus americanus	Yellow-billed Cuckoo	Bird	SC/M
Cypripedium parviflorum var. m	Northern Yellow Lady's Slipper	Plant	SC
Cypripedium reginae	Showy Lady's Slipper	Plant	SC
Eleocharis quinqueflora	Few-flower Spikerush	Plant	SC
Empidonax virescens	Acadian Flycatcher	Bird	THR
Emydoidea blandingii	Blanding's Turtle	Turtle	THR
Epilobium strictum	Downy Willow-herb	Plant	SC
Erimyzon sucetta	Lake Chubsucker	Fish	SC/N
Etheostoma microperca	Least Darter	Fish	SC/N
Fundulus diaphanous	Banded Killifish	Fish	SC/N
Lespedeza leptostachya	Prairie Bush-clover	Plant	END
Lythrurus umbratilis	Redfin Shiner	Fish	THR
Notropis anogenus	Pugnose Shiner	Fish	THR
Notropis texanus	Weed Shiner	Fish	SC/N
Opsopoeodus emiliae	Pugnose Minnow	Fish	SC/N
Scirpus cespitosus	Tufted Bulrush	Plant	THR
Thaspium trifoliatum var. flavu	Purple Meadow-parsnip	Plant	SC

Note: Species identified were recorded in the WDNR Natural Heritage Inventory database last updated 10/6/2009. Status indicators: END = Endangered, THR = Threatened, SC = Special Concern, SC/N = Special Concern/no laws regulating use, possession or harvesting,

SC/M = Special Concern/fully protected under Migratory Bird Act, SC/P = Special Concern/fully protected, SC/H = Take regulated by establishment of open/closed seasons.

Consultation with the U.S. Fish and Wildlife Service website indicated that the Prairie Bush-clover (*Lespedeza leptostachya*) is a federally-listed threatened species located in the US 12 corridor in Dane County.

Unique Areas (Section 4(f) and Section 6(f) Protected Lands)

Several parks, state recreation areas and trails, public and private conservation areas, and other protected lands are located within the study area, some immediately adjacent to US 12. Exhibit 4 on the following page shows the locations of federal and state-owned lands, public and private conservation lands, and recreation facilities within the study area.

Highway projects must include evaluations of affected lands in order to protect certain types of publically-owned properties. According to WisDOT's Facilities Development Manual (FDM), section 4(f) evaluations are required for all federally-funded transportation related actions. Unless there is no feasible or prudent alternative, section 4(f) of the U.S. Department of Transportation Act forbids the use of federal funds on projects that would take land from, or result in adverse impacts on, public parks, recreation areas, historic sites, wildlife refuges, or other areas of natural or community significance. See FDM Procedure 21-25-1 for definitions of protected places and a description of the evaluation process. Additionally, section 6(f) of the Land and Water Conservation (LAWCON) Fund Act of 1965 requires that, except under certain circumstances, property acquired or developed with LAWCON funds shall not be converted to uses other than for public outdoor recreation uses. See FDM Procedure 21-25-5 for a detailed discussion of section 6(f) requirements.

<u>Parks</u>

- *Cam-Rock County Park* is located at 68 County Highway B. This 422-acre park is located just south of Cambridge along Koshkonong Creek. It has picnic facilities, a ballfield, playgrounds, and recreational trails. The Village of Cambridge has been studying potential trail connections between the park and the Glacial Drumlin State Trail, located two miles north of Cambridge.
- *Village Veterans Park* is located between Park and Spring streets in Cambridge and is about one-half acre in size.
- *Founders Park* is located on US 12/Main Street between Water and Spring streets and is about one acre in size.
- *Westside Park* is located on Koshkonong Creek, on the south side of US 12, at Pleasant and Water streets in Cambridge. It contains about two acres and playground equipment.
- *Ripley Park* is located on Park Road and Lake Ripley. The park is privately-owned by the Cambridge Foundation and open to the public. It has about 18 acres, play equipment, a bathhouse, and athletic courts.
- *Dorothy Carnes County Park* is located on Radloff Lane in Jefferson County. The park has 394 acres of woods, prairie, farmland, trails, and picnic facilities, and is renowned for bird watching. The park has been proposed for expansion.

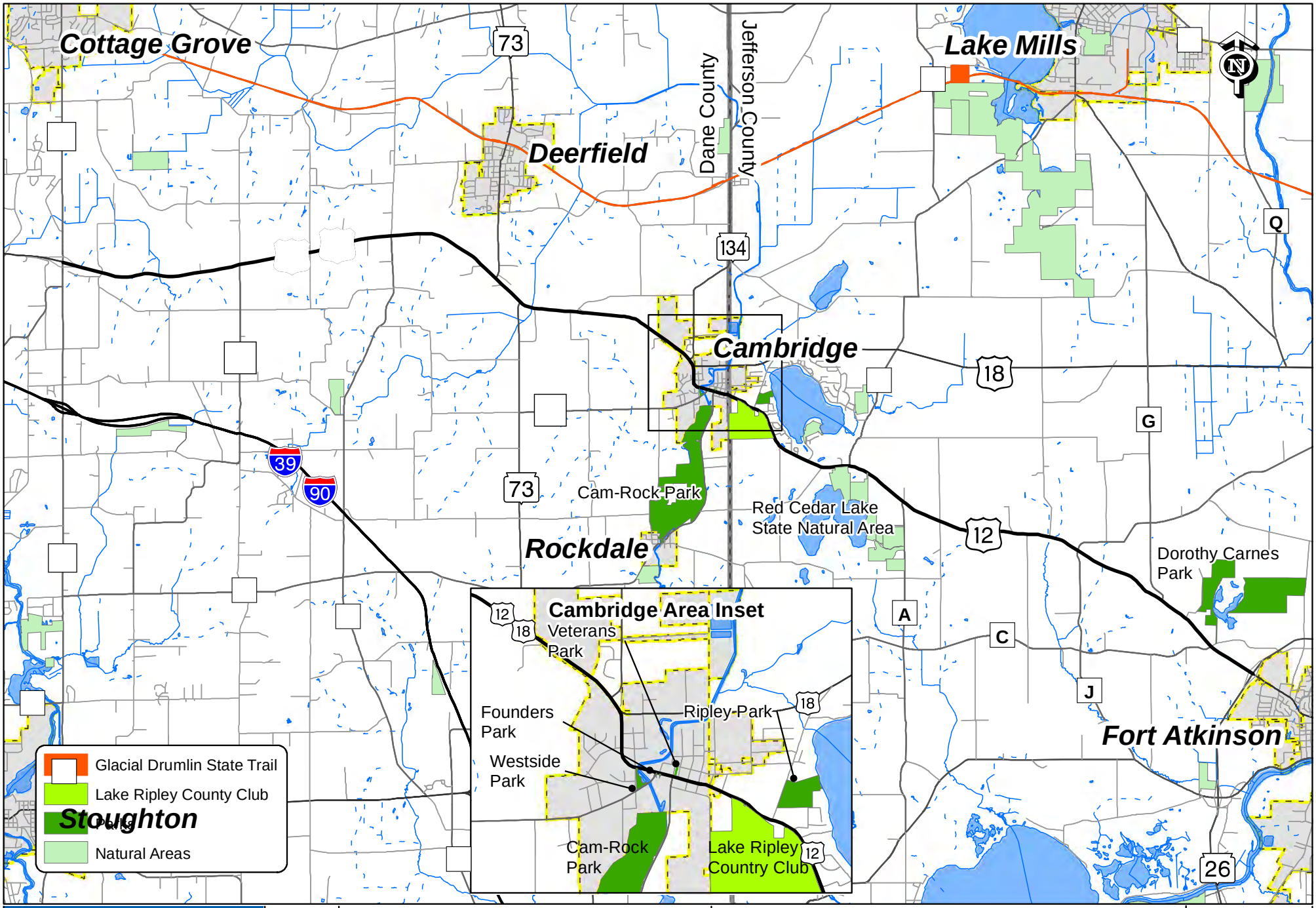

TranSmart	Not to Scale	US 12 Corridor Study	Unique Areas	Exhibit 4

Recreation Areas

- *The Lake Ripley Country Club* is located on the eastern edge of Cambridge on the south side of US 12. It is privately-owned and has an 18-hole golf course.
- *The Glacial Drumlin State Trail* is a 52-mile east–west recreational trail stretching from Cottage Grove to Waukesha. It runs roughly parallel to, but does not enter, the western half of the study area; it passes through Deerfield and London about two miles north of US 12.

Conservancy Lands

The Red Cedar Lake State Natural Area is located just east of Airport Road near Cambridge and is accessed via Brosig Lane on the south side of US 12. The property is 452 acres in size and comprised of the shallow Red Cedar Lake and adjacent wetlands that provide excellent habitat for numerous species of waterfowl and marsh birds. Parts of this natural area are owned by the U.S. Fish and Wildlife Service. Waterfowl use is extensive with an average of 60 breeding pairs of nine species. Numerous marsh birds also nest here including some uncommon species: yellow-headed blackbird, American bittern (*Botaurus lentiginosus*), least bittern (*Ixobrychus exilis*), black tern (*Chlidonias niger*), great blue heron (*Ardea herodias*), green heron, and coots. The marsh also provides habitat for the state-threatened Blanding's turtle (*Emydoidea blandingii*) and many other amphibians and reptiles including bullfrog, green frog, Cope's gray treefrog, and the northern red-bellied snake. (Source: WDNR)

The Rose Lake State Natural Area is located on the north side of US 12 in the town of Jefferson between Radloff Lane and Hoard Road. The 480-acre property is owned by Jefferson County and contains Dorothy Carnes County Park. Rose Lake is a shallow, hard water seepage lake surrounded by wetlands, oak openings, and steep hills. The lake and surrounding wetlands are also important breeding habitat for black tern (*Chlidonias niger*), black-crowned night-heron (*Nycticorax nycticorax*), and redhead (*Aythya americana*). Other breeding birds are sandhill crane, great blue heron, pied-billed grebe, American coot, common moorhen, blue-winged teal, ruddy duck, tree swallow, bank swallow, and marsh wren. American white pelicans began using the wetland in 2003 when over 800 were recorded. The wetlands are also rich in wildlife with many species of mammals, reptiles, and amphibians. (Source: WDNR)

Air Quality

Wisconsin Act 121 enacted March 7, 2012 and published March 12, 2012 repealed NR 411 of the Wisconsin Administrative Code removing the Wisconsin DNR's authority for regulation of indirect source pollution.

According to the U.S. Environmental Protection Agency (EPA), both Dane and Jefferson counties are in attainment for the air pollutants that the EPA regulates. However, Dane County's pollution levels are near the upper limits for regulated pollutants such as fine particulate matter (PM-2.5) and ozone. (*Source*: Wisconsin Administrative Code; U.S. Environmental Protection Agency; Dane County)

2.3 Transportation Corridor Conditions

Transportation corridor conditions have been ascertained from field surveys of existing conditions and reviewing as-built plans (which can be found in digital Appendix K). Included are discussions of the existing US 12 roadway, signage, utilities, multimodal accommodations, access controls, and the influence of local comprehensive plans.

Existing Highway Condition

An analysis of the US 12 facility was conducted by URS Corporation to identify geometric deficiencies within the current corridor. The full report *Existing Conditions Evaluation*, which provides detailed data not included in this section's summary, can be found in digital Appendix K. The WisDOT *Facilities Development Manual* (FDM) was the primary reference used to conduct this analysis. Other reference materials included *A Policy on Geometric Design of Highways and Streets, Fourth Edition* (2001) by the American Association of State Highway and Transportation Officials (AASHTO), and as-built plans provided by WisDOT.

Study length and termini

The US 12 corridor under study is located between County N in the town of Cottage Grove in Dane County and WIS 26 in Fort Atkinson in Jefferson County, a distance of approximately 20 miles. The study area includes the towns of Cottage Grove, Deerfield, Christiana, Oakland, Jefferson, and Koshkonong, Cambridge, and Fort Atkinson.

Functional classification

US 12 is classified as a principal arterial and designated a Connector Route in WisDOT's *Connections 2030*. The Statewide Access Management Plan designates the US 12 corridor as a Tier 2A corridor. Within the study area, US 12 is designated a long-truck route.

Present US 12 facility

The US 12 corridor was first designated as State Trunk Highway 12 in 1918 and US 12 in 1926. The roadway predates these designations by several decades, and was first constructed with a concrete surface in the early 1920s. Although today's highway follows the same general route as the original US 12, numerous geometric improvements have occurred since that time. As-built plans were obtained to ascertain changes to the corridor over the past 90 years. The plans collected were the primary source of data used to determine the existing geometry of the corridor and can be found in Appendix K. The most recent improvements to the corridor were undertaken in 1998, when the roadway between County N and Cambridge was reconstructed, and 2004, when the roadway between Cambridge and Fort Atkinson was reconstructed. In Cambridge, US 12 functions as Main Street and contains the central business district. US 12 is currently designated a secondary Over-Size Over-Weight (OSOW) freight route from I-39/90 to the intersection with US 18 in Cambridge. A secondary OSOW freight route is a route that is acceptable for OSOW vehicles, but is not WisDOT's preferred route. The preferred route paralleling US 12 is I-94.

Posted speed

The rural segments of US 12 are posted at 55 mph and include County N to Kenseth Way and Marina Lane through WIS 26. Urban and urbanizing portions of the US 12 corridor are found in Cambridge and the Lake Ripley area east of Cambridge. The posted speed limit is 25 mph from US 18 to 2nd Street in Cambridge, 35 mph from 2nd Street to Sleepy Hollow Road, and 45 mph from Kenseth Way to WIS 134 and Sleepy Hollow Road to Marina Lane.

Horizontal alignment

There are 42 horizontal curves in the study corridor. Seven curves were found to not meet minimum standards for superelevation, as defined in *Facilities Development Manual*, and are listed in table 22 below. Data on all horizontal curves in the corridor can be found in digital Appendix K.

Table 22 Deficient horizontal curves

Location	Station	Radius (ft)	Intended design speed	Superelevation per as-builts	Superelevation required per design speed	Actual design speed
E of WIS 73 (south)	21+109.78	1,637.02	60 mph	5.3%	5.9%	53 mph
At Brosig Lane	303+76.85	3,274.00	60 mph	3.7%	4.2%	55 mph
E of Ehrke Rd	463+12.96	1,637.01	60 mph	2.1%	5.9%	29 mph
E of County J	493+72.38	7,639.44	60 mph	2.1%	2.2%	60 mph
W of County G	522+14.36	1,637.02	60 mph	5.8%	5.9%	60 mph
W of County G	536+23.90	1,637.02	60 mph	5.8%	5.9%	60 mph
At County C	603+42.24	1,909.86	60 mph	5.5%	5.6%	60 mph

Superelevation

The superelevation throughout the US 12 corridor varies from 2.0 percent to 5.8 percent.

Vertical alignment

Seventy-two vertical curves have been identified in the US 12 study corridor. No vertical curves have K values below minimum standards specified in the *Facilities Development Manual*. Six curves were found to have K values between minimum and desirable, and are listed in table 23 below. Data on all vertical curves in the corridor can be found in digital Appendix K.

Table 23 Vertical curves with less-than-desirable K values

Location	Station	Intended design speed	Sag or crest	K Value		
				Existing	Minimum*	Desirable*
W of County N	134+87.43	60 mph	Crest	236.00	151	245
E of Oak Park Road	188+82.40	60 mph	Crest	239.00	151	245
E of County J	513+40.00	60 mph	Crest	229.43	151	245
W of County G	539+00.00	60 mph	Crest	190.07	151	245
E of County G	554+50.00	60 mph	Crest	204.96	151	245
E of County C	618+64.58	60 mph	Crest	215.74	151	245

*Per the Facilities Development Manual

Cross Section

Design features of the roadway's cross section described in this section were determined by consulting as-built plans, which can be found in digital Appendix K. Typical sections representing a large majority of the corridor's design have been provided in exhibit 5 on the next page.

Number of roadways and lanes

The study corridor contains two roadways (two lanes in each direction) from County N for about ¾-mile until they merge into a single rural two-lane roadway (one lane in each direction). The single roadway continues through Cambridge until it changes to two roadways (two lanes in each direction) ½-mile west of WIS 26 in Fort Atkinson, which continue eastward through the end of the study area at the WIS 26 ramps.

Median width

Medians have been constructed in two areas of the US 12 study corridor, at the far western and eastern ends of the corridor. Typical median width on the western end near County N is 50 feet, measured from the edges of the opposing inside lanes. The typical median on the eastern end of the corridor near WIS 26 measures 24 feet from the edges of the opposing inside lanes.

Lane width

The typical lane width on the rural two-lane roadways west of Cambridge and from Cambridge to Fort Atkinson is 12 feet. On the four-lane segments near the US 12/County N and US12/WIS 26 interchanges, all lanes are 12 feet wide. Within Cambridge, all through lanes are 12 feet wide.

Shoulder width

US 12 is a rural two-lane roadway throughout most of the study area. As a result, shoulder width is frequently consistent with horizontal clearance. The typical shoulder width of the rural two-lane portion of US 12 west of Cambridge consists of three feet of concrete pavement and seven feet of crushed aggregate. The typical shoulder width of the rural portion of US 12 between Sleepy Hollow Road and the WIS 26 interchange area is ten feet composed of two feet of concrete pavement, six feet bituminous pavement, and two feet crushed aggregate.

The shoulders on the four-lane segment near the US 12/County N interchange have different compositions. The inner shoulder is composed of three feet of bituminous pavement and seven feet of crushed aggregate, while the outer shoulder is ten feet wide and composed of two feet of concrete pavement, six feet of bituminous pavement, and two feet of crushed aggregate.

The two-lane segment of US 12 in the Cambridge area (from US 18 to Sleepy Hollow Road) and the four-lane segment at the WIS 26 interchange have curb-and-gutter throughout and lack shoulders. Within the Cambridge area, horizontal clearance ranging from four to 11 feet exists, often for parking, between the outer lane edge and the curb face. Typically, the parking lane is between six and ten feet wide between the outer lane edge and curb face.

Crown slope

Crown slope is typically two percent for the entire US 12 corridor.

County N to End of Four-Lane Segment

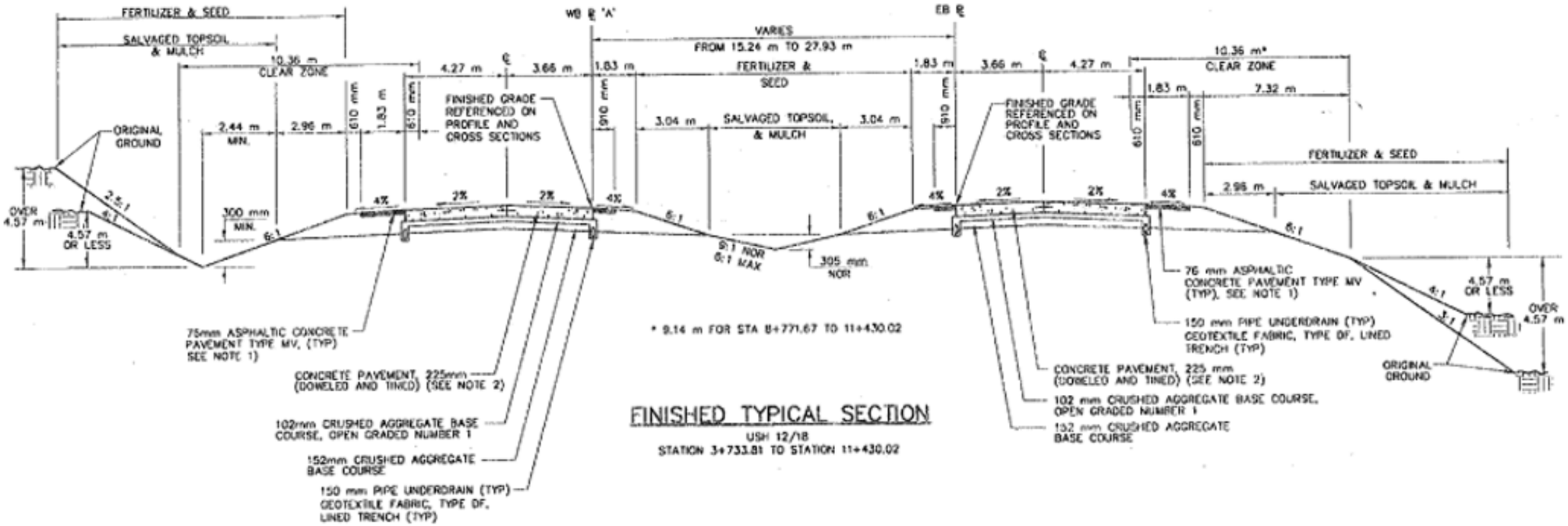

FINISHED TYPICAL SECTION

USH 12/18

STATION 3+733.81 TO STATION 11+430.02

End of Four-Lane Split to US 18

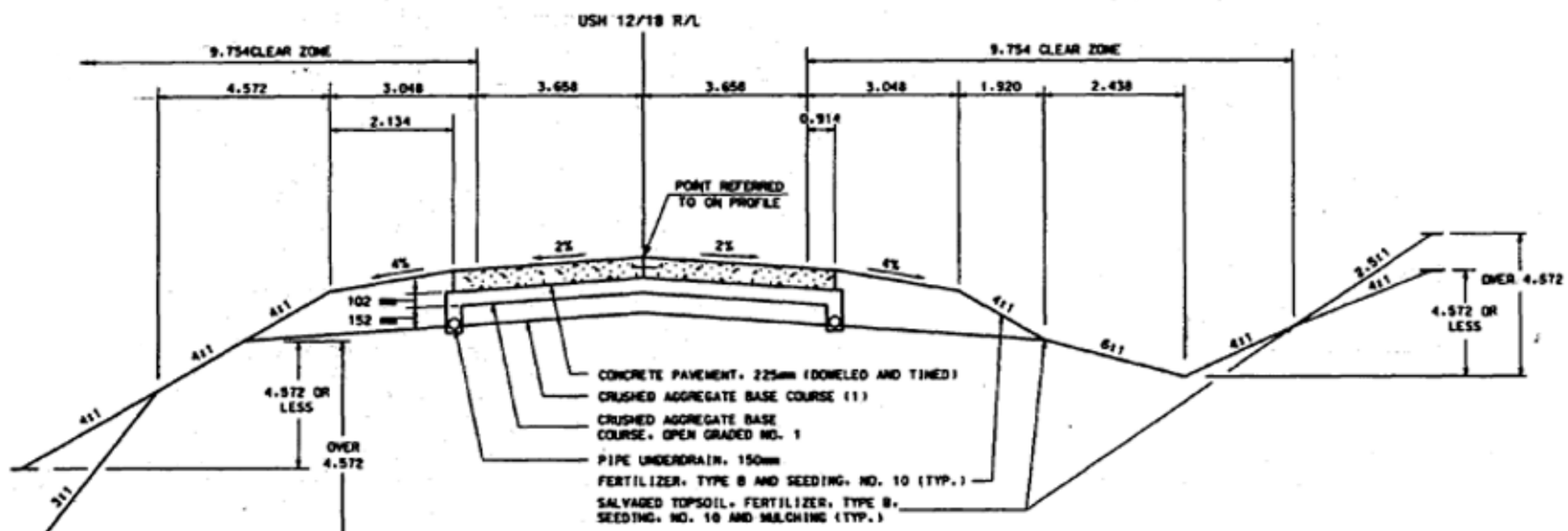

PROPOSED USH 12/18 TYPICAL SECTION

12+984.506 TO 25+450.851

Exhibit 5 | Map 1

Existing Typical Sections

US 12 Corridor Study

Not to Scale

TranSmart

US 18 to Pine Crest Drive

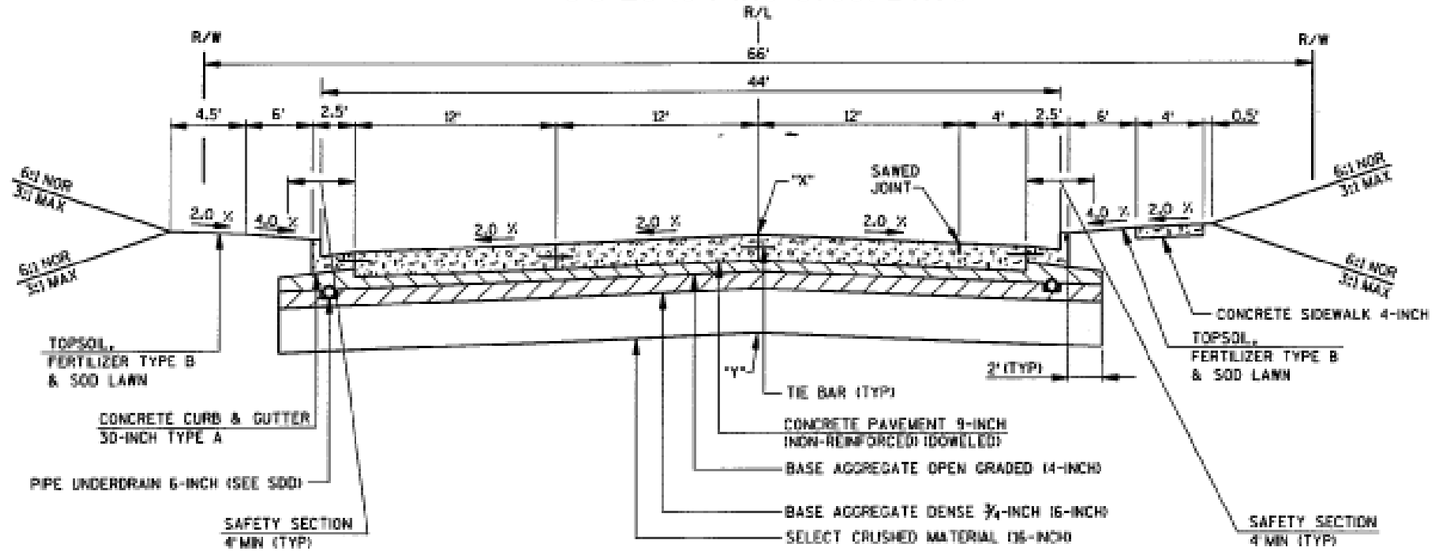

TYPICAL FINISHED SECTION
USH 12
USH 18 - PINE CREST DRIVE
STA 135+97.37 - STA 138+69.47

Pine Crest Drive to Madison Street

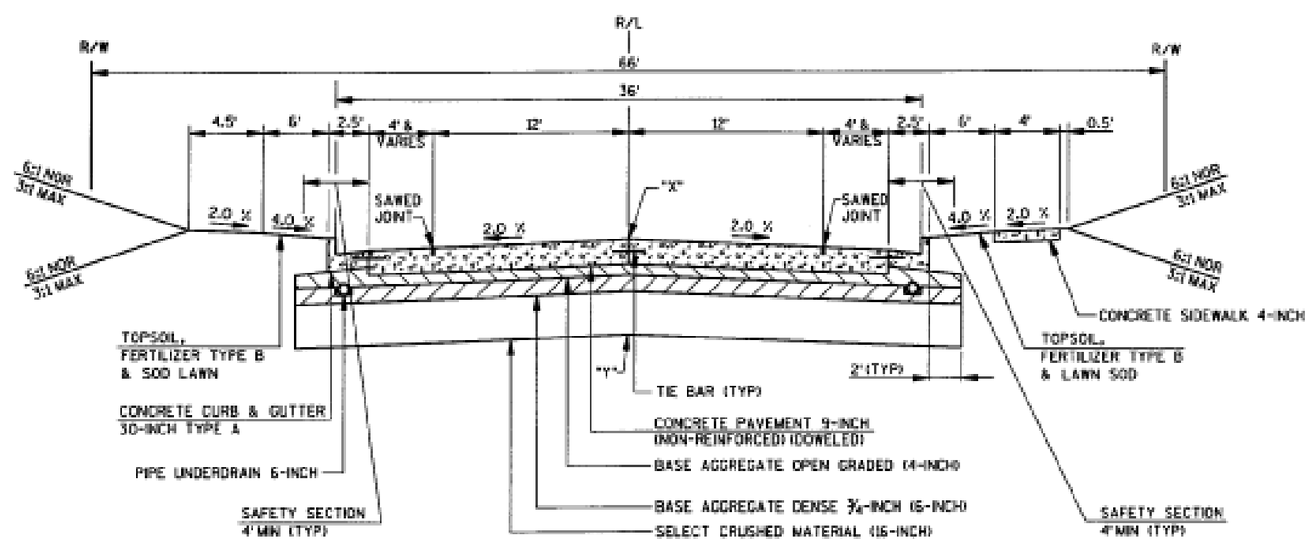

TYPICAL FINISHED SECTION
USH 12
PINE CREST DRIVE - MADISON STREET
STA 138+69.47 - STA 142+93.69

Exhibit 5
Map 2

Existing Typical Sections

US 12 Corridor Study

Not to Scale

TranSmart

Madison Street to Koshkonong Creek Bridge

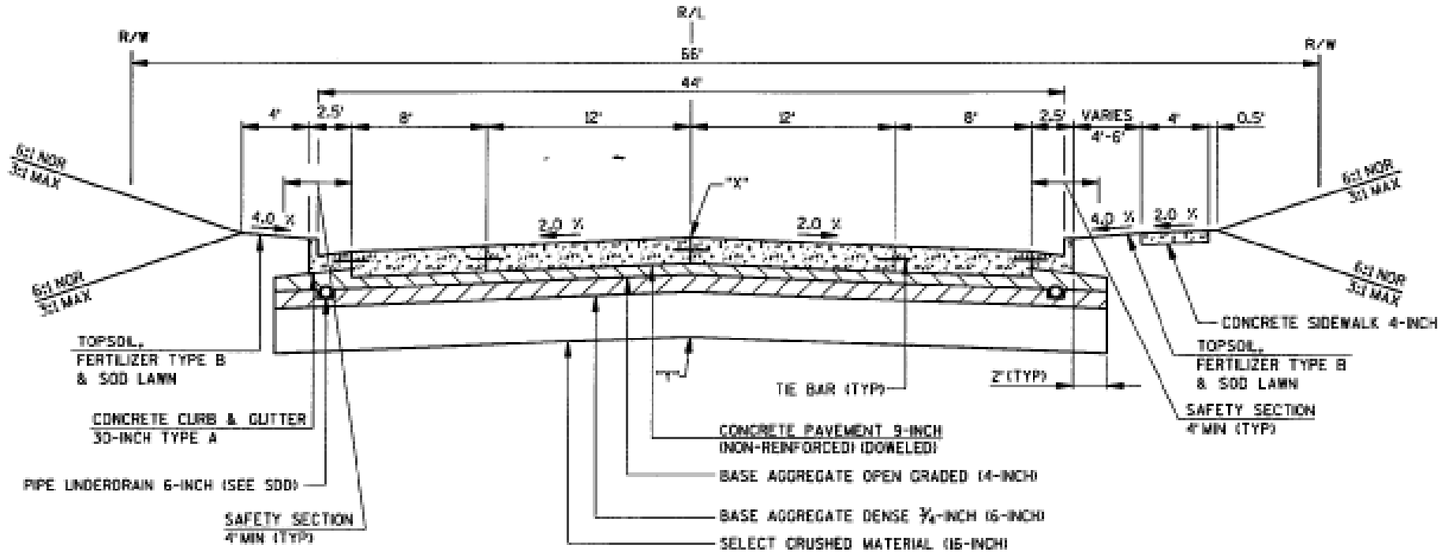

TYPICAL FINISHED SECTION
USH 12
MADISON STREET - KOSHKONONG CREEK BRIDGE
STA 150+50.00 - STA 151+29.25

Koshkonong Creek Bridge to Lawn Street

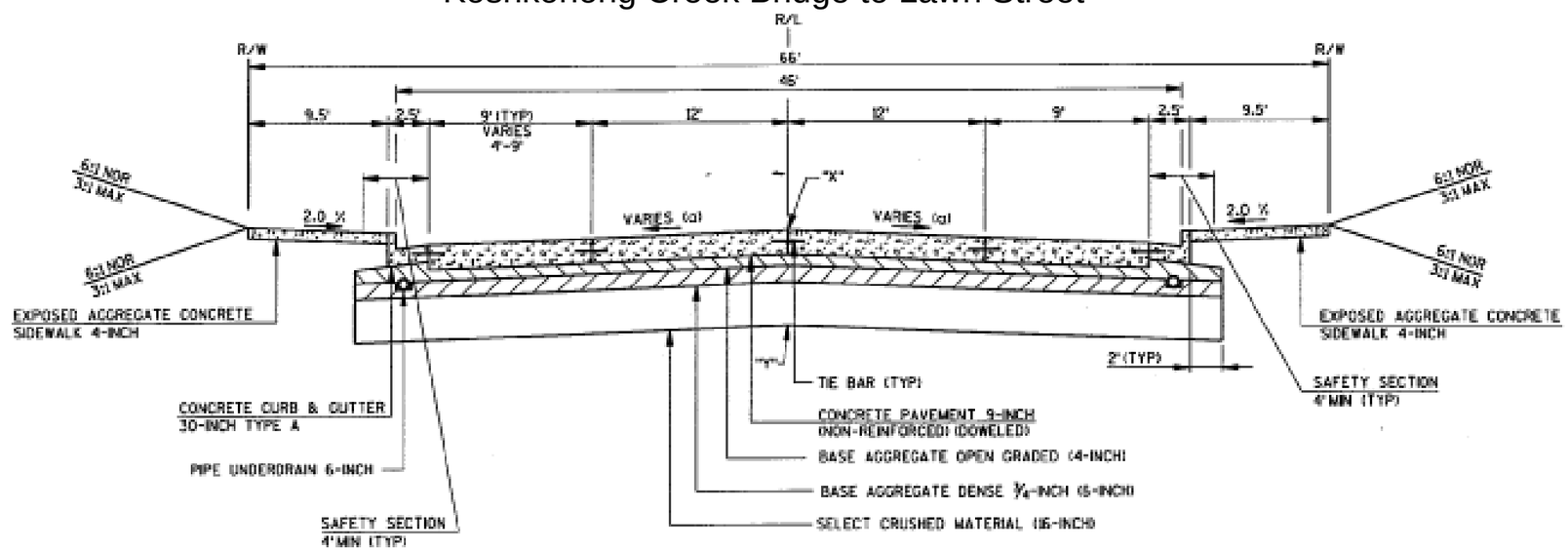

TYPICAL FINISHED SECTION
USH 12
KOSHKONONG CREEK BRIDGE - LAWN STREET
STA 151+97.50 - STA 167+10.71

Exhibit 5
Map 3

Existing Typical Sections

US 12 Corridor Study

Not to Scale

TranSmart

Lawn Street to High Street

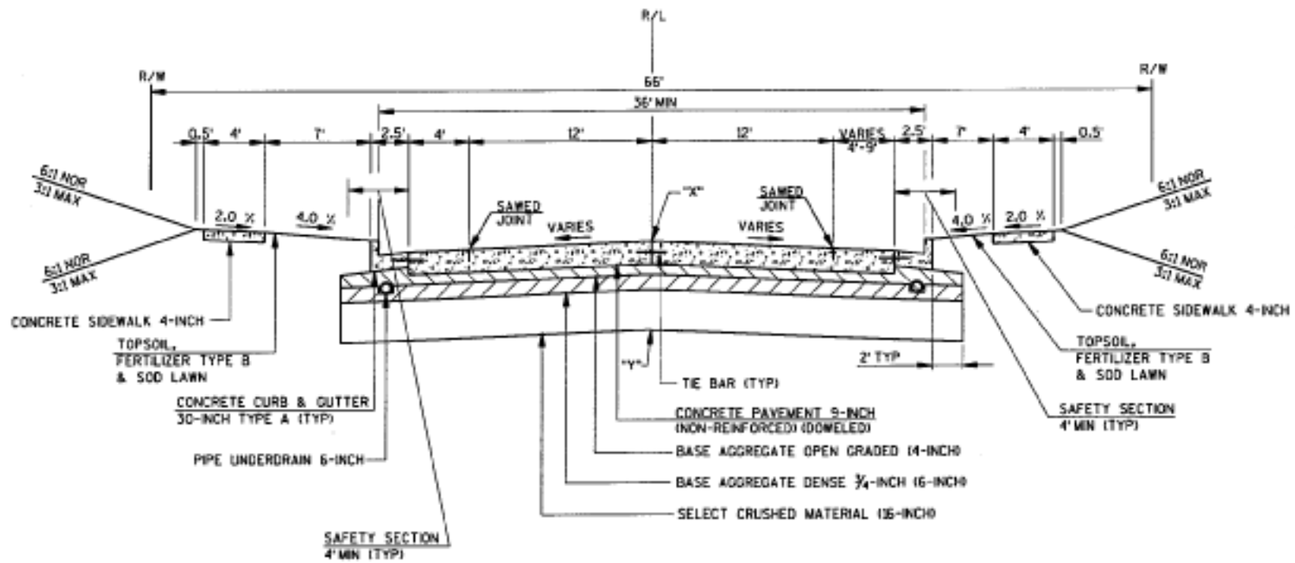

TYPICAL FINISHED SECTION
USH 12
LAWN STREET - HIGH STREET
STA 167+10.71 - STA 170+63.00

High Street to Simonsen Street

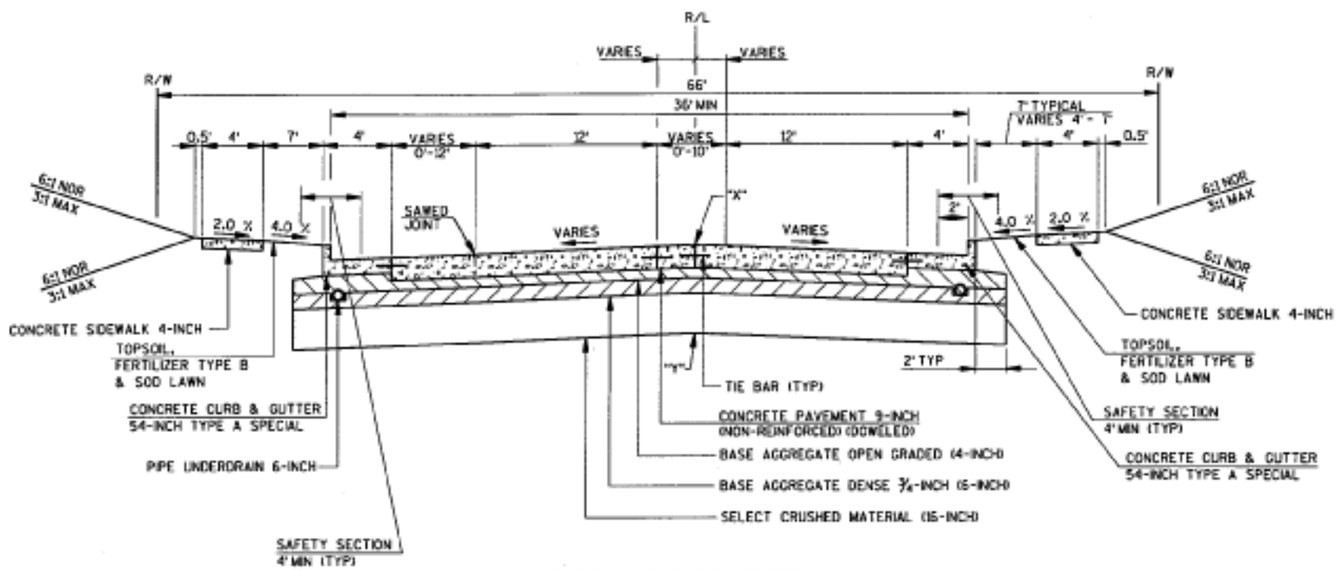

TYPICAL FINISHED SECTION
USH 12
HIGH STREET - SIMONSEN STREET
STA 170+63.00 - STA 173+99.77

Exhibit 5
Map 4

Existing Typical Sections

US 12 Corridor Study

Not to Scale

TranSmart

Simonsen Street to Park Road

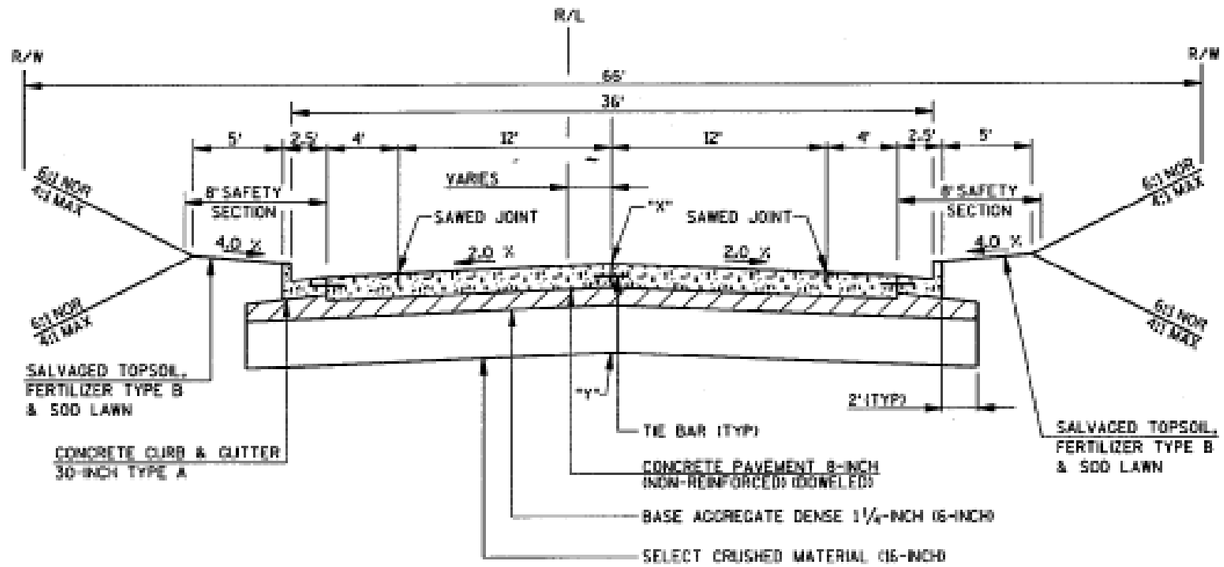

TYPICAL FINISHED SECTION
USH 12
SIMONSEN STREET- PARK ROAD
STA. 176+00.00 - STA. 189+31.00

Park Road to Sleepy Hollow Road

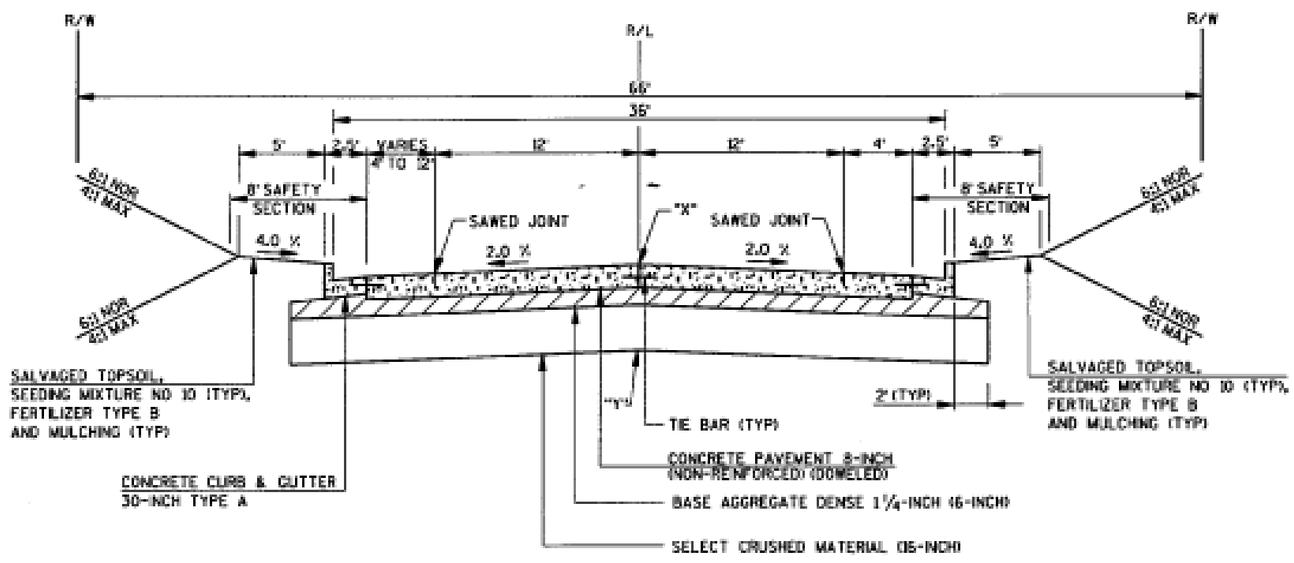

TYPICAL FINISHED SECTION
USH 12
PARK ROAD - SLEEPY HOLLOW ROAD
STA. 195+87.17 - STA. 197+73.00
STA 210+30.00 - STA 213+00.00

Exhibit 5
Map 5

Existing Typical Sections

US 12 Corridor Study

Not to Scale

TranSmart

Sleepy Hollow Road to WIS 26

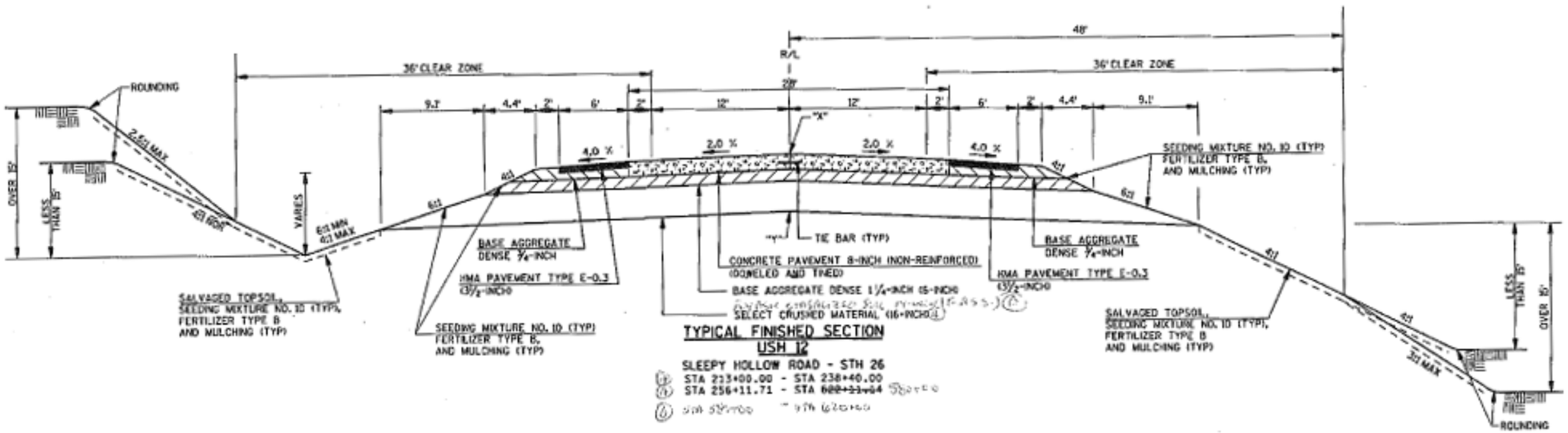

Exhibit 5
Map 6

Existing Typical Sections

US 12 Corridor Study

Not to Scale

TranSmart

Vertical clearance

There are no structures over the US 12 corridor with the exception of County N at the western terminus and WIS 26 at the eastern terminus of the study area.

Pavement structure

Between County N and the US 18 intersection in Cambridge, the typical US 12 pavement structure consists of 8.86 inches (225 mm) of non-reinforced concrete pavement laid over four inches (102 mm) of open-graded crushed aggregate, and six inches (152 mm) of crushed aggregate.

Between US 18 and Simonsen Street in Cambridge, the typical US 12 pavement structure consists of nine inches of non-reinforced concrete laid over four inches of open-graded aggregate, six inches of dense aggregate, and sixteen inches of select crushed material.

Between Simonsen Street and WIS 26, the typical US 12 pavement structure consists of eight inches of non-reinforced concrete laid over six inches of dense aggregate on top of 16 inches of select crushed material.

Right of way

The width of the US 12 right of way varies throughout the corridor because of the frequent curvature of the roadway and property anomalies. On the four-lane segment east of County N, the typical right of way width is 250 feet before reducing to the rural two-lane roadway east of North Star Road. The remainder of US 12 east to the US 18 intersection varies between 100 and 250 feet, with a typical range of 125 to 200 feet.

The US 12 right of way follows a narrower urbanized template within the Cambridge area. From just west of Pine Crest Drive to Simonsen Street the right of way is 66 feet, from Simonsen Street to Second Street the right of way is 58 feet, and from Second Street to Park Road the right of way is 66 feet wide.

East of Park Road the right of way widens considerably. Between Park Road and County A (south leg), the right of way varies due to slope acquisitions which widened the original 66-foot width typically to about 120 feet but occasionally to as much as 250 feet at curves and intersections. East of County A (south leg), the width of the right of way typically varies between 100 and 150 feet, with occasional widths beyond 150 feet for slope and curve considerations.

Detailed right of way information can be accessed from the right of way plats which are located in the digital Appendix K, *Compiled Data*.

Clear zones

The typical clear zone west of the Cambridge urbanized area is 32 feet and east of the Cambridge urbanized area is 36 feet.

Rural Intersection and Private Access Spacing

The WisDOT Facilities Development Manual Procedure 11-5-5 Attachment 5.1, Access Spacing Guidelines, specifies recommended spacing distances between intersecting roadways (public and private) on rural arterial highways. Table 24 below provides a summary of WisDOT spacing guidelines for intersecting roadways on a principal arterial such as US 12.

Table 24 WisDOT access spacing guidelines

Intersecting roadway		Spacing between roadways
Type	**Design year ADT**	
Minor arterial	**>5,000**	2 miles
	3,000 – 5,000	1 mile
	<3,000	1 mile
Major collector		1 mile
Minor collector		2,000 feet
Local		2,000 feet
Private	**>100**	1,000 feet
	<100	1,000 feet

Distances between intersecting roadways on the US 12 corridor were measured in order to identify those intersections having less spacing than articulated in WisDOT's spacing guidelines. All roadway and driveway spacing data can be found in Appendix F. Two highways were determined to have spacing that fell below WisDOT recommendations per FDM 11-5-5 Attachment 1: WIS 73 and CTH C/Hoard Road. Both legs of WIS 73 are designated as minor arterials with traffic volumes below 5,000 AADT. The recommended spacing between them is one mile, but the actual spacing is approximately 2,500 feet. County C/Hoard Road is designated as a major collector and is located about 3,400 feet from the WIS 26 ramps, which is less than the recommended spacing of one mile.

Twenty-six public roads intersect US 12 between County N and WIS 26 in rural areas, while 24 streets and roads intersect US 12 in the Cambridge urbanized area. Recommended minimum spacing between rural local roads on a principal arterial is 2,000 feet. Several local roads along US 12 in the rural areas do not meet WisDOT's recommended spacing of 2,000 feet; however, most of these roads have extremely low traffic volumes. It should be noted that many rural local roads along US 12 have very low traffic volumes and access to fewer than five private properties; some access only one property.

The US 12 corridor also has 208 private residential and commercial driveways and field access points. Per FDM 11-5-5 Attachment 5.1, minimum recommended spacing between private roads and other roads is 1,000 feet. Spacing distances for all driveways were measured. Very few of the corridor's private driveways and access points meet WisDOT's spacing standards. Of greatest concern is the clustering of private access points near each other and near public road intersections in locations where vehicle speeds on US 12 are high (and posted speed limit is greater than 40 mph)

and/or visibility is poor. Examples include driveways near the US 12 intersections with Oakland Road and County C/Hoard Road.

The Cambridge urbanized area is evaluated as part of the traffic operations section of the report (see Part II, section IV). A number of factors apply to urbanized areas to determine safe access. These include speed, geometry, types of turn movements, and proximity of driveways to intersection functional areas.

Sign Inventory

A field survey was undertaken from May through July 2011 to determine the types and locations of all official signs along US 12 between County N in Dane County and WIS 26 in Jefferson County. The full sign inventory can be found in the digital Appendix K, and includes tabular and graphical inventories of these signs. The tabular inventory includes information on each sign's location, message, type, colors, and Wisconsin Manual on Uniform Traffic Control Devices (WMUTCD) code.

Utilities

Seven companies and local governments have utilities within the corridor and have provided utility maps, included in *Existing Conditions Evaluation* found in digital Appendix K. They include:

- Alliant Energy electric and gas
- American Transmission Company
- Frontier Communications
- PAETEC Telecommunications
- Town of Oakland sewer mains
- Village of Cambridge gas and water
- WE Energies electric and gas

Access Controls

Along US 12 access control is maintained through statutory and purchased access control provisions. Statutory access control via an access control plat, established under state statute §84.25, is a tool used in rural areas below certain traffic volume thresholds and often excludes urbanized areas. Implementation of an access control plat is achieved through a legal process of finding, determination, and declaration after recording the existing driveway and public street connections on a map of the corridor. Requests for new driveways or public street connections, or a change in driveway use, require that a permitting process be followed allowing WisDOT the ability to approve or deny the connection or use change based on a number of factors. Where traffic volumes are higher, the state might purchase access under state statute §84.09.

The state has purchased access control for almost the entire stretch of the US 12 study corridor between North Star Road and Pine Crest Drive in Cambridge. In the segment between County N and North Star Road, the state retains statutory access control through state statute §84.09. In 2007, the state established statutory access control (§84.25) of the US 12 corridor between Park Road and the beginning of the four-lane segment near the WIS 26 interchange.

Dane County has an access control/driveway ordinance which is intended to regulate access to most county trunk highways in unincorporated areas and in some incorporated areas. Within the study area, the ordinance applies to County N but does not apply to County MN, County BN, County W, or County PQ.

The Village of Cambridge has a driveway ordinance which regulates access to public streets.

Jefferson County does not have an access control ordinance, but has a set of regulations governing driveways on county trunk highways.

Fort Atkinson does not have an access ordinance.

Multimodal Accommodations

Multimodal facilities within the US 12 corridor include bicycle routes, off-street trails, and sidewalks. No transit routes are located within the study corridor. In the winter months, snowmobile trails are also present. Multimodal accommodations within the study area are illustrated in exhibit 6.

Pedestrian Facilities

Pedestrian facilities in the corridor are limited to sidewalks within Cambridge and the multi-use trails in Cam-Rock Park. Sidewalks are located along both side of US 12 within Cambridge from about 200 feet south of US 18 to Pine Crest Drive, and along only the south/west side of US 12 from Pine Crest Drive to Pleasant Street. From Pleasant Street to Simonsen Street sidewalks are located on both sides of US 12, and from Simonsen Street to 2nd Street on only the south side. Several crosswalks across US 12 are located within Cambridge at Pine Crest Drive, Madison Street, Pleasant Street, Water Street, Spring Street, Lawn Street, High Street, and Simonsen Street.

Bicycle Facilities

Bicycle facilities within the US 12 corridor are very limited. The multi-use trails within Cam-Rock Park are the only officially-designated off-road bicycle facilities located within the study area. The Dane County Map for Bicyclists identifies County BN, County W, County PQ, County B, and WIS 134 as suitable for use by bicyclists. The Jefferson County Bike Map identifies Oakland Road, County J, and County C/Hoard Road as bike routes.

Recreational Trails

The Glacial Drumlin State Trail is a 52-mile east–west recreational trail stretching from Cottage Grove to Waukesha. It runs roughly parallel to—but does not enter—the western half of the study area and passes through Deerfield and London about two miles north of US 12.

The Glacial River Trail in Jefferson County is located east of the study area, within Fort Atkinson and the town of Koshkonong. It is a recreational trail that begins at WIS 89/Main Street in Fort Atkinson and extends southwest to the Rock County line. This trail is proposed for extension north to Watertown and south to Milton and Janesville.

Cam-Rock County Park located along Dane County B south of Cambridge is home to multi-use trails, suitable for cross-country skiing and hiking. The park is also home to several single track mountain bike trails.

Snowmobile Trails

There are extensive snowmobile trail networks in both Dane and Jefferson counties within the US 12 corridor study area consisting of numbered corridor and club trails. Official county snowmobile maps can be found in Appendix G. There are four mapped snowmobile trail crossings of US 12 in the Dane County portion of the corridor and two mapped crossings in the Jefferson County portion:

- Corridor 15/38, just east of County BN/Nora Road
- Corridor 15, just east of County W/Oak Park Road
- Corridor 15, at WIS 73 (north leg)
- Club 23, about 4,000 feet east of State Farm Road
- Corridor 15, just west of Airport Road
- Corridor 15, just west of County C/Hoard Road

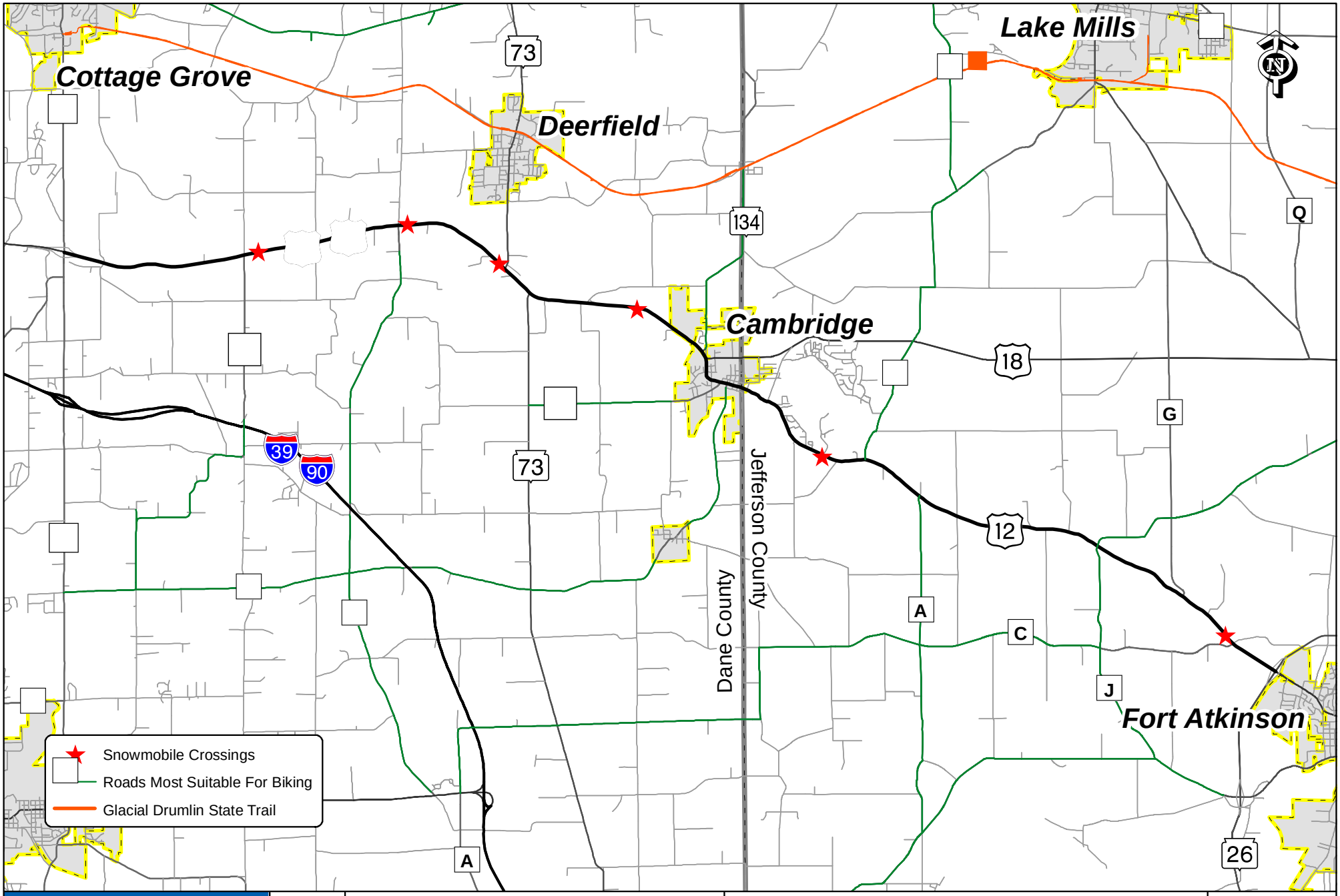

TranSmart	Not to Scale	US 12 Corridor Study	Multimodal Accommodations	Exhibit 6

Encroachments

Existing right of way data, aerial photography, and a field review were used to determine possible encroachment locations. Twenty-six locations, listed in table 25, were found to have encroachments into the state-owned right of way consisting of signs, awnings, stone landmarks, landscaping, and other miscellaneous items. Photographs of these encroachments can be seen in the URS report *Existing Conditions Evaluation* found in digital Appendix K.

Table 25 Encroachments into the US 12 right of way

Location	Description
662 US 12/18, Town of Christiana	Stone decorative gateways
300 US 12/18, Town of Christiana	Parked cars in salvage yard
412 W Main St, Cambridge	Commercial sign, ground mounted: "Subway, etc"
279 W Main St, Cambridge	Commercial sign, ground mounted: "BP"
102 N Pleasant St, Cambridge	Stone landscaping retaining wall
219 W Main St, Cambridge	Sign mounted on commercial building
214 W Main St, Cambridge	Awning & sign mounted on commercial building: "Rowe Pottery", "The Grind"
206 W Main St, Cambridge	Awning mounted on commercial building: "Keystone Grill"
152 W Main St, Cambridge	Sign mounted on commercial building: "Rumpf Law Offices"
149 W Main St, Cambridge	Awning & sign mounted on commercial building "Koshkonong Galleries"
148 W Main St, Cambridge	Awning mounted on commercial building: "Rover Makeovers"
146 W Main St, Cambridge	Wood steps attached to commercial building
136 W Main St, Cambridge	Awning mounted on commercial building
130 W Main St, Cambridge	Awning mounted on commercial building: "Katy's Corner"
128 W Main St, Cambridge	Awning & sign mounted on commercial building: "Cambridge Jewelry"
109 W Main St, Cambridge	Awning mounted on commercial building
102 W Main St, Cambridge	Commercial sign, ground mounted: "Badger Bank"
101 W Main St, Cambridge	Awning mounted on commercial building: "The Wood Shed"
110 E Main St, Cambridge	Signs mounted on commercial building: "Kurt's Place"
W9652 US 12, Town of Oakland	Timbered retaining wall
W9644 US 12, Town of Oakland	Portable variable message sign: "Lake Ripley Family Restaurant"
W9460 US 12, Town of Oakland	Message sign, ground mounted: "Faith Evangelical Lutheran Church"
W9368 US 12, Town of Oakland	Landscaping stones and wooden fence
W8546 US 12, Town of Oakland	Portable variable message sign: "Kranky's Pub & Grill"
N3525 US 12, Town of Oakland	Stone decorative gateways at Oestreich Lane housing park
W7545 US 12, Town of Oakland	Sign and stone planter: "Awesome Acres"

Structures and Culverts Inventory

Bridges, culverts and retaining walls were identified in the US 12 corridor by examining WisDOT as-built plans and verified by a field survey. Four bridges and 65 culverts were identified within the study corridor. Table 26 below lists the bridges in the corridor. An inventory map and table linked to corresponding plan sheets of all structures and culverts can be found in digital Appendix K.

Table 26 Structures

ID	Location	Description
B-13-456	County N	Two-span/54-inch pre-stressed concrete girders
B-13-358	Mud Creek	Reinforced concrete slabs
B-13-449	Koshkonong Creek	Deck-girder
B-28-24	WIS 26	Two-span/45-inch pre-stressed concrete girders

3.0 Comprehensive Plan Review and Analysis

Community comprehensive and special district plans were reviewed to gain knowledge of local intentions concerning future land use, development, and resource management within the US 12 study corridor. Table 27 below lists all of the plans that were consulted for this review. Table 28, found at the end of this section, summarizes the potential effects that expected future land use changes could have on US 12. Wisconsin's Smart Growth law requires that county and most local governments prepare comprehensive plans for their communities. Furthermore, plans exist for many state- and locally-managed recreational areas and resource districts; Lake Ripley and the Glacial Heritage Area are two entities for which plans have been created. In the review, special attention was paid to discern the potential effects of future local actions on US 12. Please refer to digital Appendix K to view the land use maps for each of the communities reviewed in the passages that follow. Comprehensive plans can be viewed in digital Appendix K.

Table 27 Local plans

Plan Name	Year Adopted
Dane County Comprehensive Plan 2007	2007
Town of Cottage Grove Smart Growth Comprehensive Plan – 2020	2002
Town of Deerfield Comprehensive Plan	2007
Village of Deerfield Comprehensive Plan	2007
Town of Christiana Comprehensive Plan 2009	2010
Jefferson County Comprehensive Plan Update	2010
Jefferson County Agricultural Preservation and Land Use Plan (draft #3)	In progress
Town of Oakland Comprehensive Plan 2008 – 2030	2008
Town of Jefferson Comprehensive Land Use Plan 2010 – 2030	2010
Town of Koshkonong Comprehensive Land Use Plan 2010 – 2035	2010
City of Fort Atkinson Comprehensive Plan Draft July 2008	In progress
Lake Ripley Improvement Plan	2009
Feasibility Study and Master Plan and Environmental Impact Statement for the Proposed Glacial Heritage Area (draft)	In progress

Dane County

The populations of rural towns and villages in eastern Dane County are growing at rates consistent with the county as a whole. The county's population was 488,073 in 2010, which was 33 percent greater than it was in 1990. The growth in the rural towns is accompanied by large-lot rural residential development on existing roads and in rural subdivisions.

All towns in Dane County follow the county's zoning ordinance. The county's exclusive agricultural zoning regulation and transfer of development rights program is currently guiding rural residential development pressure and steers it to already urbanized areas of the county.

The county has an access control/driveway ordinance which is intended to regulate access to most county trunk highways in unincorporated areas and some in incorporated areas. Within the study area, the ordinance applies to County N but does not apply to county highways MN, BN, W, or PQ.

No planned county road projects are expected to directly affect US 12 in the study area.

Town of Cottage Grove

According to the 2010 Census, the town's population was 3,875, which was 9.9 percent higher than in 1990. Town growth might have been greater but for annexations by the village of Cottage Grove. This population growth, which is spurred by proximity to employment centers in the Madison area, has occurred concurrently with the development of new single-family rural houses, typically on large lots, alone or in rural subdivisions. The town is still predominantly rural and agricultural; agricultural land makes up about 78 percent and woodlots about 15 percent of all land uses in the town. Residential uses make up 2.3 percent of all land uses, commercial uses make up 0.2 percent, and industrial uses 1.1 percent. Except for the interchange with County N, where the land use is designated for limited commercial and industrial uses, the land uses along the corridor are agricultural and low-density residential.

The town does not have a boundary agreement with the City of Madison. The town land use plan map indicates that the eastern boundary of the city's extraterritorial jurisdiction is North Star Road, which is a half-mile east of County N.

No planned town road projects are expected to directly affect US 12 in the study area.

Town of Deerfield

The population of the town of Deerfield, which was 1,585 in 2010, has grown by 34.2 percent since 1990. This growth trend is expected to continue into the foreseeable future due to job growth in the Madison metropolitan region.

As of 2003, agriculture and other open space uses (such as woodlands, open water, and recreation) comprised about 91 percent of all land uses in the town. Among other uses, residential uses comprised about five percent, while commercial and industrial uses comprised each made up less than one percent.

The town's land use plan encourages the preservation of agricultural and open space uses, while encouraging growth only in existing development clusters such as the urban service area in the village of Deerfield. Most of the US 12 corridor within the town is located within the town's agricultural preservation district, limiting residential development to one house per 35 acres. Rural development districts have been designated along Oak Park Road.

The US 12/WIS 73 intersection has been designated as a Controlled Community Entryway by the town; commercial and industrial development in this district should meet special intensive site plan and design standards. Additional commercial and residential growth is expected along the WIS 73 corridor between US 12 and the village of Deerfield.

The town plan identifies the US 12/18 and WIS 73 intersection as needing improvement and supports appropriate improvements thereto. The plan also recommends that the shoulders of WIS 73 be widened to four feet to accommodate bicycle traffic.

The town has a driveway and access permit ordinance.

No future town road projects in the plan are expected to directly affect US 12 in the study area.

Village of Deerfield

Although US 12 does not pass through the village of Deerfield, the village future land use plan indicates that growth emanating from the village could have a direct impact on US 12 operations in the coming years. In 2010, the village had 2,319 residents and has grown 43.4 percent since 1990; this growth trend is expected to continue owing to the village's proximity to Madison.

The future land use plan lays out an aggressive template for future growth in areas more than a half-mile from current village boundaries. Residential and commercial development growth is to be accommodated in most areas surrounding the existing village limits, particularly to the west and south and along US 12 and WIS 73. Commercial land use growth is expected to be most intense along both US 12 and WIS 73.

WIS 73 serves as the village Main Street and primary north–south arterial road. While US 12 does not pass through the village, it effectively serves as the village's primary east–west arterial less than one mile south of the village line. Oak Park Road passes north–south to the west of the village and serves a large volume of Deerfield-based traffic destined to US 12. The Glacial Drumlin State Trail follows an old Chicago and Northwestern railroad bed and passes east–west through the village downtown.

No major programmed village road projects are expected to directly affect US 12. However, the transportation element of the plan encourages the following:

- Guiding traffic off local roads (Liberty Street and Oak Park Road) and onto US 12 and WIS 73.
- Development of a new road accessing Oak Park Road.
- Development of a new arterial that accesses US 12 from the village.

The village has a driveway ordinance. The village has an official map ordinance, but has yet to create and adopt an official map.

Town of Christiana

US 12 passes through the northeast corner of the town of Christiana before entering the village of Cambridge. In 2010 the town's population was 1,235, which was 4.5 percent higher than in 1990.

Agriculture and other open space uses (such as woodlands, open water, and recreation) comprise the vast majority of all land uses in the town. In the US 12 study corridor, residential development is clustered near the US 12/Clear View Road and US 12/State Farm Road intersections. Isolated commercial uses are located near Cambridge at the intersection with Rodney Road.

The future land use plan encourages development away from productive agricultural uses and in the urban service areas. All of the town's territory that is located within the US 12 study corridor falls within the extra-territorial jurisdictions of the village of Deerfield and the village of Cambridge.

No planned town road projects are expected to have direct effects on US 12 in the study area.

Village of Cambridge

US 12 passes through the core of the village, and the highway serves as Main Street in the historic central business district (CBD). In 2010 Cambridge had 1,457 residents, which represents 51.3 percent growth since 1990, the highest growth rate of any community in the US 12 study corridor.

Cambridge has a wide mix of land uses within the study corridor. Agriculture, woodlands, and other vacant or open space uses comprise 43 percent of all land uses in the village, followed by residential uses at about 26 percent, industrial at 5.6 percent, commercial and institutional each at 4 percent, and transportation and recreation totaling about 17 percent.

The CBD and adjacent neighborhoods are characterized by the more intensely developed small pedestrian-oriented lots typical of Wisconsin towns developed in the mid-to-late 19th Century. Further away from the CBD, development is characterized by larger auto-oriented commercial and residential lots.

West of WIS 134, Cambridge's future land use plan indicates zones for low-density residential development and mixed commercial uses directly adjacent to US 12. New residential and industrial land uses are planned for the WIS 134 corridor. East of the CBD, some new residential development is planned along the US 12 corridor in areas not reserved for park and open space.

Cambridge has a master plan for downtown development and treatments for US 12/Main Street.

No programmed village road projects are expected to have direct effects on US 12 in the study area. The village plan indicates a proposed north–south street connection between US 12/18 and County PQ west of the village limits.

In 2007, the village undertook an evaluation of potential bicycle and pedestrian network improvements to connect with regional trails. At-grade and below grade crossings of US 12 between Pleasant Street and Mill Street in the village were evaluated in the "Pedestrian and Trail Crossing Report." No route recommendations were made in the report.

The village has a driveway ordinance.

Jefferson County

Since 1990, Jefferson County's population has grown by 23.5 percent, which is faster than the state as a whole; this growth trend is expected to continue. The *Jefferson County Agricultural & Land Use Plan* (1999) and *Comprehensive Plan Update* (2010) encourage development in the county's existing urban service areas and discourage it in designated agricultural zones. A large majority of the US 12 study corridor in Jefferson County is located in agricultural preservation areas, as designated by the *Jefferson County Agricultural & Land Use Plan*. Most transportation effects on US 12 are expected to result from development activities that occur in existing urban service areas that are described in the sections for each community. The *Jefferson County Agricultural Preservation and Land Use Plan*, currently being drafted, would further restrict development in agricultural districts and direct residential, commercial, and industrial growth to existing and planned urban and limited service areas.

The county is in the process of updating the 1996 *Jefferson County Bikeway and Pedestrianway Plan*. The county also has official bicycle and snowmobile trail maps. Four bicycle routes cross, or are collocated with, US 12 at the following locations within the study area: in Cambridge to Cedar Road, Oakland Road, County J and County C.

According to the *Comprehensive Plan Update,* no county road projects are expected to have direct effects on US 12 in the study area. However, the county plans to resurface County C in 2013 and reconstruct County J in the 2014–16 timeframe.

The county has a set of regulations governing driveways on county trunk highways.

Town of Oakland

US 12 passes northwest–southeast through the central part of the town. In 2010, the town's population was 3,100, which was 22.7 percent larger than in 1990.

Although single-family non-farm rural residences are spread throughout the town, the vast majority of town residential land use lies in the area bounded by US 12, US 18, and County A, which are the approximate boundaries of the town's urban service area. As of 2009, agriculture and farmsteads comprised about 60 percent of all land uses in the town, while woodlands, wetlands, open water and other open space uses made up about 31 percent. Residential uses made up five percent of land uses and commercial and industrial totaled less than one percent.

The future land use plan designates most undeveloped land in the town as Rural Agriculture. Future development is strongly encouraged to be placed within or adjacent to the urban service area, to include nonresidential uses along US 12. The town follows Dane County zoning and most of the town is zoned for exclusive agriculture. Apart from the urban service area, a residential cluster exists at Oakland Center, a small residential district located in the vicinity of US 12 and Oakland Road. The Oakland Center area has been designated a non-growth area; rezoning and subdivision of parcels is not to be permitted. Commercial use may be permitted on existing parcels there, however.

Major roads in the town include US 18, County A, County G, and Oakland Road. No planned town road projects are expected to have direct effects on US 12 in the study area.

Town of Jefferson

A one-mile segment of US 12 crosses through the southwest corner of the town of Jefferson. A majority of the US 12 corridor in the town passes through agricultural lands while some residential development abuts the highway. Planned future land use for the corridor is predominantly reserved for agricultural preservation while freezing in place the extent of residential development that exists in the agricultural zones. However, the portions of US 12 closest to the city of Fort Atkinson are located within the city's future urban service area.

Major roads in the town near US 12 include County C, Hoard Road, and WIS 26. No planned town road projects are expected to have direct effects on US 12 in the study area.

Town of Koshkonong

Less than one mile of the US 12 study corridor falls within the town of Koshkonong, in its northwest corner. The town's population was 3,692 in 2010, 23.7 percent higher than in 1990; this growth rate is faster than the state as a whole in the same time period (16.3 percent). According to the Town of Koshkonong Land Use Plan 2010 – 2030 Map, US 12 passes exclusively within a county-designated agricultural preservation zone. Future development is directed to the Fort Atkinson urban service area or other designated areas such as the Lake Koshkonong growth area and potential business clusters. Subdivisions are regulated by the town and county subdivision ordinances.

The *Town of Koshkonong Comprehensive Outdoor Recreation and Open Space Plan 2005 – 2010* identifies park and trail plans. The plan does not identify any facilities in the US 12 study corridor.

Major roads in the town near US 12 include WIS 26, WIS 89, WIS 106, County C, and Hoard Road. No planned town road projects are expected to have direct effects on US 12 in the study area. The town does not have a driveway ordinance.

City of Fort Atkinson

Fort Atkinson is the most populous community within the US 12 study corridor with 12,368 residents in 2010, which is 20.9 percent more residents than the city had in 1990. According to the *City of Fort Atkinson Comprehensive Plan* draft of July 2008, the city has planned for aggressive growth through annexation of adjacent lands. Within the US 12 corridor, the city plans to expand its urban service area and annex lands along the US 12 corridor in the towns of Koshkonong and Jefferson. These areas, currently located in agricultural preservation zones, have been designated for future commercial and residential uses. Future local roads are also proposed for this part of the US 12 corridor.

WisDOT had been studying US 12 bypass alternatives for the Fort Atkinson area through a Draft Environmental Impact Statement process. This process was halted by WisDOT in 2012. In its comprehensive plan, the City of Fort Atkinson expressed its support for alternative 7a, which follows a southern route around the city.

Major roads in the city located near US 12 include WIS 26, WIS 89, WIS 106, and Banker Road. The city has an official map.

Lake Ripley Management District

The Lake Ripley Management District was created to address several problems that have come to negatively affect the conditions and human enjoyment of Lake Ripley. Among these problems is stormwater runoff, which carries nutrients and other pollutants into the lake.

The *Lake Ripley Improvement Plan* was created to help address these problems and focus local and county efforts on comprehensive watershed management, including improving the effectiveness of stormwater management practices and land use regulation.

The plan does not mention US 12 explicitly, but it recommends policies and actions that could affect highway reconstruction options, highway stormwater management, land use regulation and local road networks in the US 12 corridor, and measures such as intersection lighting.

Glacial Heritage Area (WDNR)

The proposed Glacial Heritage Area, as described in the draft *Feasibility Study and Master Plan and Environmental Impact Statement for the Proposed Glacial Heritage Area*, would be a network of parks, preserves, natural areas, and conservation lands connected to each other and nearby communities by trails. The Glacial Drumlin State Trail and Glacial River Trail form the primary axes of the area and would be supplemented by trails proposed by this plan. This plan has yet to be finalized and does not indicate an implementation timeline.

Three proposed trails cross, and/or are collocated with, US 12 within the study corridor between Cambridge and Fort Atkinson, and connect the following areas: Hope Lake Park, Cam-Rock Park, Red Cedar Lake, Dorothy Carnes Park, Oakland Highlands Park, and the Lower Bark River.

Summary of Potential Transportation Effects

Potential effects to US 12 have been summarized in table 28 below.

Table 28 Summary of potential transportation effects

Community	Major Roads	Potential Transportation Effects
Town of Cottage Grove	County N, County BN	• Commercial growth could add traffic to the County N interchange.
Town of Deerfield	Oak Park Road, WIS 73	• Growth along US 12, WIS 73 and Oak Park Road could add traffic to US 12 and US 12 intersections.
Village of Deerfield	WIS 73	• Planned development zones south of village could add traffic to WIS 73 and US 12. • New access to US 12 desired.
Town of Christiana	Clear View Road, County PQ	• Growth along Clear View and State Farm roads could add traffic to intersections and US 12.
Village of Cambridge	US 18, WIS 134, County PQ, County B	• Planned development zones could add more traffic to intersections and US 12. • Proposed north–south connector. • Downtown master plan elements could affect US 12 operation.
Town of Oakland	US 18, County A, County G, County J, Oakland Road	• Growth designated in urban service area around Lake Ripley could increase traffic at Park Road and County A intersections. • Rezoning of Oakland Center parcels could increase traffic and conflicts.
Town of Jefferson	WIS 26, County C, Hoard Road	• Outward growth of Fort Atkinson's urban service area could add traffic to US 12.
Town of Koshkonong	WIS 26, County C, Hoard Road	• Outward growth of Fort Atkinson's urban service area could add traffic to US 12. • The Lake Koshkonong growth area could add commuter traffic to WIS 26 and US 12.
City of Fort Atkinson	WIS 26, WIS 89, WIS 106, Banker Road	• Planned growth areas along US 12 could add traffic and operational challenges.

4.0 Traffic Operations Analysis

Current and forecasted traffic conditions along the US 12 study corridor have been measured and analyzed. In section 4.1, the existing and forecasted traffic volumes on five segments and at intersections are described. Section 4.2 presents the results of level of service (LOS) analysis of traffic within the five segments and at several intersections. Section 4.3 provides a signal risk assessment, describing existing conditions and recommending potential improvements. Section 4.4 describes safety conditions on the corridor, presenting crash data for the five segments and highlighted intersections. Section 4.5 shows the results of travel time studies undertaken on the corridor. Section 4.6 summarizes findings of truck movements through Cambridge. Finally, section 4.7 provides an analysis of deer crashes on the corridor and potential mitigation measures.

4.1 Existing and Future Traffic Volumes

Historic and Existing Traffic Volumes

Mainline Traffic

Historic traffic volumes between 1999 and 2009 from WisDOT's Metamanager database were reviewed for select locations along US 12 within the study area. As part of this study, traffic counts were conducted in 2011 at select locations along US 12 to determine current average daily traffic (ADT), peak traffic hours and volumes, and vehicle types and shares.

For the purposes of analysis, the corridor was divided into five segments: four rural segments and one urban segment that includes Cambridge. Segmentation has been determined by WisDOT Metamanager roadway classifications and the needs of traffic operations analysis (as determined by traffic volumes and speed zones within the corridor). The segments are described as follows:

- Rural 7.0-mile segment between County N and WIS 73 (south leg)
- Rural 2.7-mile segment between WIS 73 (south leg) and US 18/Jefferson Street
- Urban 1.2-mile segment between US 18/Jefferson Street and Park Road
- Rural 5.3-mile segment between Park Road and County J
- Rural 3.1-mile segment between County J and WIS 26

Table 29 below shows the distribution of historic and current traffic volumes on the US 12 corridor segments.

Table 29 Historic and current traffic volumes (AADT) on US 12 segments

Segment	2000	2003	2006	2009	2011
County N to WIS 73 (south)	8,300[1]	10,500	10,600	-	11,500[2]
WIS 73 (south) to US 18	8,300[1]	8,900	9,500	9,400	11,400
US 18 to Park Road	8,600[1]	8,900	8,700	10,000	9,100[2]
Park Road to County J	6,800	-	6,300	7,700	9,700
County J to WIS 26	8,700	-	7,400	8,600	9,600

[1]1999 counts; [2]2010 counts

Intersection Traffic

Morning and evening peak-hour turn counts were conducted for 16 intersections along the US 12 corridor between April and June 2011. Table 30 below shows the number of vehicles counted by turn movement for each intersection approach leg. Exhibit 7 on the following pages shows AM and PM peak hour turning movement locations and counts along the corridor. The resulting data was used as the basis for LOS analysis and WisDOT forecasts, and can be used to confirm problem intersections along US 12. Detailed count reports including forecast information for each intersection in the table below are included in the digital Appendix K, *Compiled Data*.

Table 30 2011 peak-hour intersection turning movement counts

	Eastbound US 12			Westbound US 12			Northbound			Southbound		
AM volumes **PM volumes**	**Left**	**Thru**	**Right**	**Left**	**Thru**	**Right**	**Left**	**Thru**	**Right**	**Left**	**Thru**	**Right**
County N EB ramps	*60* **132**	*0* **2**	*52* **82**	*-* **-**	*-* **-**	*-* **-**	*-* **-**	*214* **175**	*17* **48**	*24* **38**	*167* **155**	*-* **-**
County N WB ramps	*-* **-**	*-* **-**	*-* **-**	*42* **29**	*0* **1**	*30* **24**	*83* **45**	*183* **281**	*-* **-**	*-* **-**	*142* **166**	*199* **80**
County BN/Nora Rd	*1* **21**	*289* **1068**	*8* **17**	*3* **5**	*873* **373**	*1* **8**	*10* **5**	*3* **8**	*9* **6**	*1* **1**	*9* **5**	*24* **5**
County W/Oak Park Rd	*45* **121**	*308* **721**	*1* **15**	*12* **14**	*976* **320**	*30* **12**	*13* **0**	*18* **10**	*8* **5**	*18* **19**	*8* **20**	*162* **48**
WIS 73 (north)	*54* **127**	*266* **708**	*-* **-**	*-* **-**	*678* **296**	*118* **89**	*-* **-**	*-* **-**	*-* **-**	*97* **157**	*-* **-**	*162* **59**
WIS 73 (south)	*-* **-**	*282* **668**	*51* **115**	*16* **23**	*646* **367**	*-* **-**	*93* **48**	*-* **-**	*12* **22**	*-* **-**	*-* **-**	*-* **-**
WIS 134	*3* **5**	*235* **807**	*-* **-**	*-* **-**	*682* **383**	*21* **44**	*-* **-**	*-* **-**	*-* **-**	*40* **60**	*-* **-**	*6* **6**
US 18	*118* **351**	*198* **435**	*-* **-**	*-* **-**	*470* **267**	*37* **56**	*-* **-**	*-* **-**	*-* **-**	*41* **46**	*-* **-**	*187* **47**
County PQ/Water St	*-* **-**	*234* **540**	*7* **13**	*24* **26**	*405* **333**	*-* **-**	*9* **23**	*-* **-**	*30* **42**	*-* **-**	*-* **-**	*-* **-**
County B/Spring St	*6* **17**	*242* **492**	*33* **50**	*34* **22**	*385* **324**	*11* **6**	*25* **30**	*1* **1**	*35* **27**	*-* **-**	*-* **-**	*-* **-**
Simonsen St	*74* **51**	*256* **556**	*-* **-**	*-* **-**	*405* **362**	*10* **12**	*-* **-**	*-* **-**	*-* **-**	*4* **12**	*-* **-**	*70* **33**
County J	*3* **7**	*201* **373**	*1* **5**	*0* **0**	*250* **305**	*0* **2**	*7* **1**	*3* **4**	*2* **2**	*1* **4**	*2* **9**	*6* **8**
County G	*0* **8**	*230* **441**	*-* **-**	*-* **-**	*217* **292**	*18* **60**	*-* **-**	*-* **-**	*-* **-**	*48* **40**	*-* **-**	*1* **4**
County C/Hoard Rd	*5* **2**	*349* **340**	*2* **1**	*40* **68**	*349* **342**	*3* **7**	*1* **3**	*9* **4**	*66* **43**	*1* **4**	*2* **7**	*4* **4**
WIS 26 SB ramps	*-* **-**	*363* **400**	*64* **25**	*46* **68**	*339* **440**	*-* **-**	*-* **-**	*-* **-**	*-* **-**	*24* **53**	*2* **2**	*4* **16**
WIS 26 NB ramps	*11* **14**	*366* **441**	*-* **-**	*-* **-**	*301* **450**	*54* **84**	*68* **40**	*0* **0**	*86* **60**	*-* **-**	*-* **-**	*-* **-**

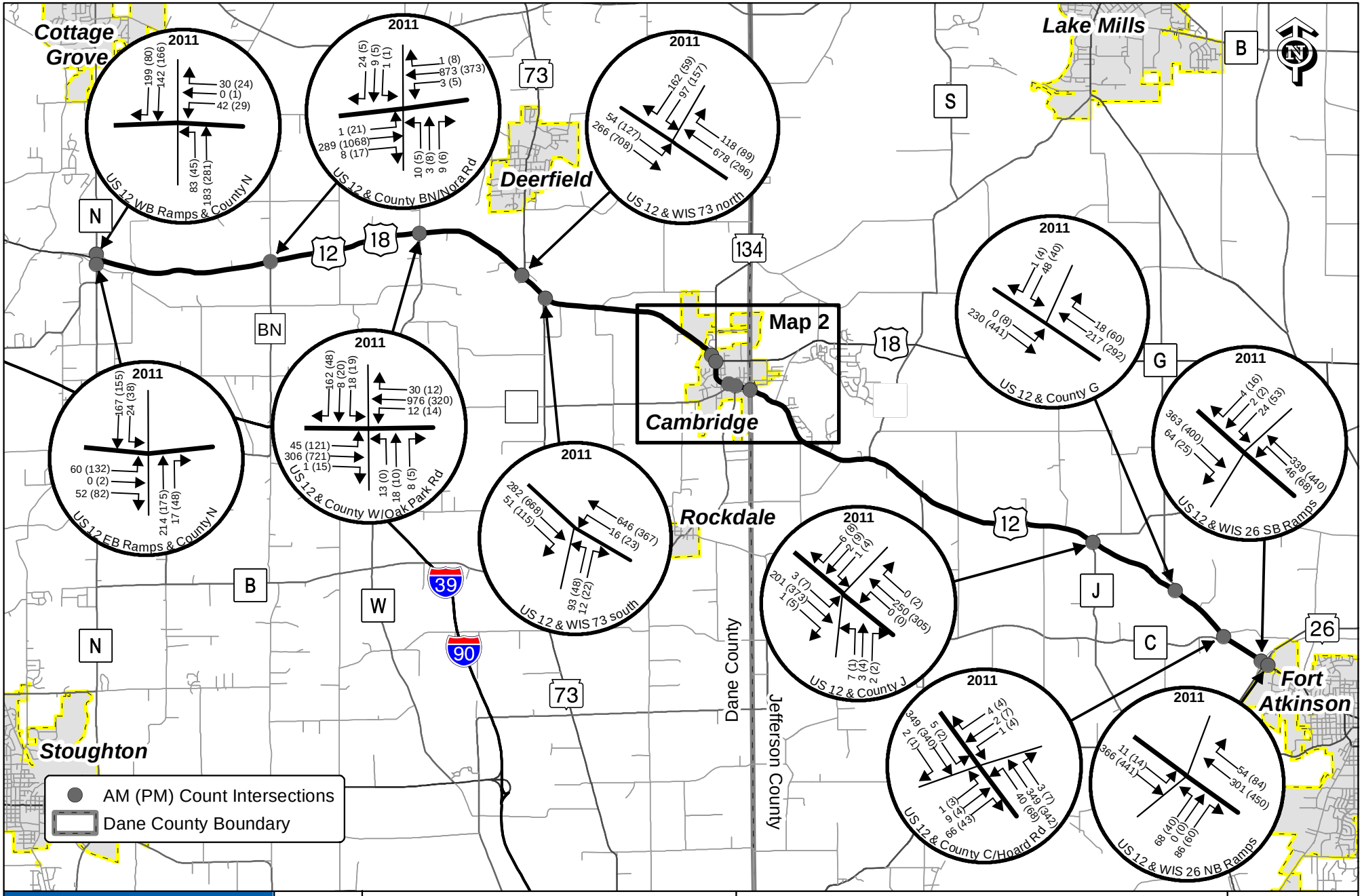

TranSmart	Not To Scale	US 12 Corridor Study	Turning Movement Count Data and Locations	Exhibit 7 Map 1

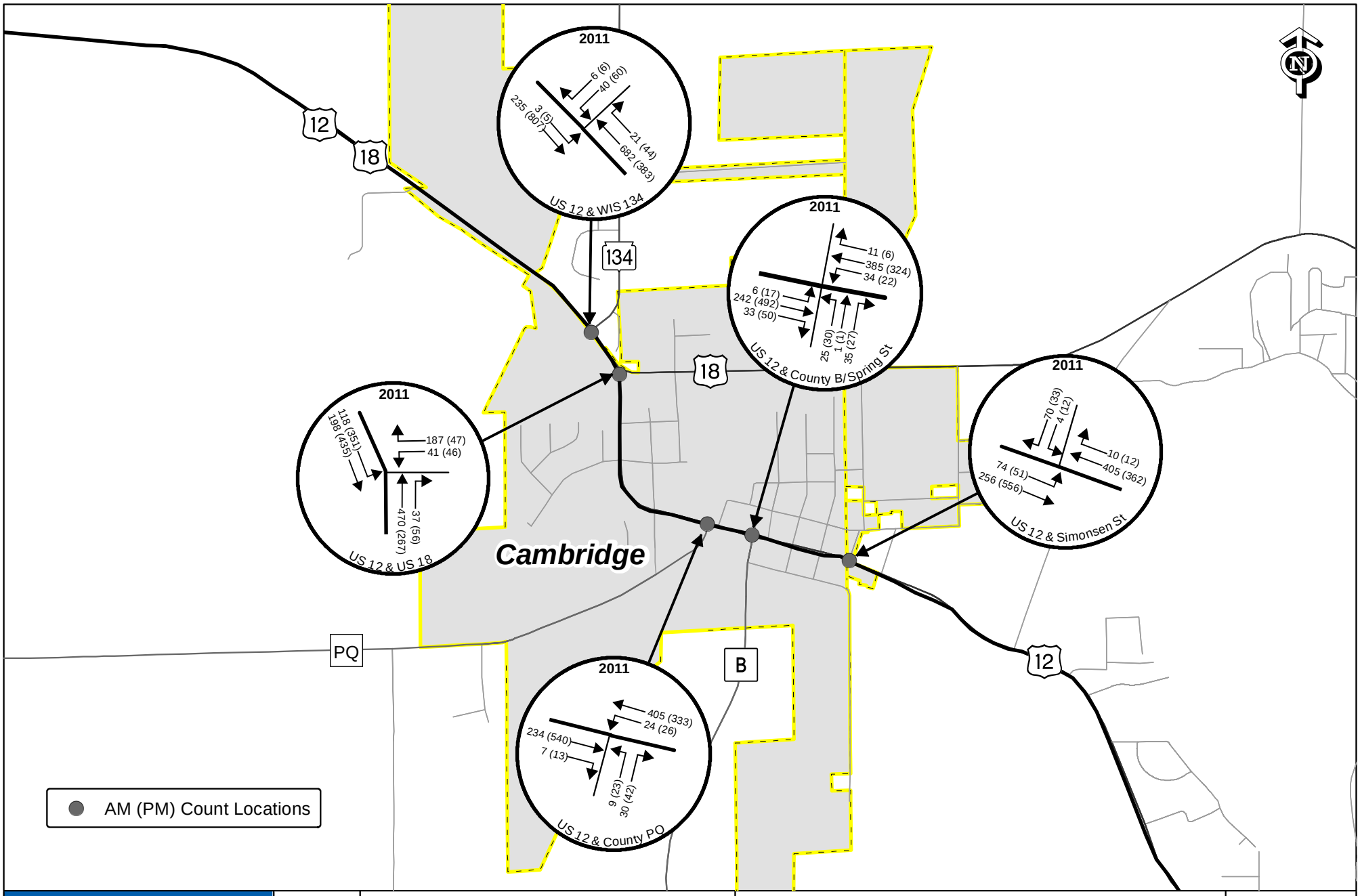

TranSmart	Not To Scale	US 12 Corridor Study	Turning Movement Count Data and Locations	Exhibit 7 Map 2

WisDOT Forecast

WisDOT has forecasted AADT traffic volumes for US 12 through 2040 based on counts conducted in 2010 and 2011. Forecast AADT volumes by segment can be seen in table 31 below. The forecast assumes that no major new traffic generators will be developed in the US 12 study corridor through 2040. WisDOT forecast sheets can be found in Appendix H, Traffic Operations Data.

Table 31 Current and forecast WisDOT traffic volumes (AADT) on US 12 segments

Segment	2011	2020	2030	2040
County N to WIS 73 (south)	11,500[1]	12,900	14,400	15,800
WIS 73 (south) to US 18	11,400	12,500	13,700	14,900
US 18 to Park Road	9,100[1]	9,900	10,700	11,500
Park Road to County J	9,700	10,300	11,100	11,800
County J to WIS 26	9,600	10,700	11,900	13,000

[1]2010 counts

Future intersection volumes within the corridor were estimated based on the WisDOT forecast for 2040. These volumes can be seen in table 32 or exhibit 8 on the following pages.

Table 32 2040 peak-hour WisDOT forecasts

	Eastbound US 12			Westbound US 12			Northbound			Southbound		
AM volumes **PM volumes**	**Left**	**Thru**	**Right**	**Left**	**Thru**	**Right**	**Left**	**Thru**	**Right**	**Left**	**Thru**	**Right**
County N EB ramps	*74* **162**	*0* **0**	*64* **113**	*-* **-**	*-* **-**	*-* **-**	*-* **-**	*262* **178**	*23* **46**	*32* **54**	*204* **184**	*-* **-**
County N WB ramps	*-* **-**	*-* **-**	*-* **-**	*50* **34**	*0* **2**	*34* **35**	*100* **33**	*226* **323**	*-* **-**	*-* **-**	*177* **198**	*237* **107**
County BN/Nora Rd	*4* **24**	*383* **1298**	*9* **20**	*4* **7**	*1029* **470**	*1* **11**	*12* **5**	*5* **5**	*13* **8**	*0* **1**	*13* **9**	*17* **7**
County W/Oak Park Rd	*55* **117**	*379* **854**	*1* **20**	*15* **12**	*1201* **416**	*37* **19**	*16* **5**	*22* **14**	*10* **2**	*22* **17**	*10* **15**	*199* **55**
WIS 73 (north)	*65* **156**	*327* **872**	*-* **-**	*-* **-**	*836* **364**	*149* **113**	*-* **-**	*-* **-**	*-* **-**	*123* **197**	*-* **-**	*199* **72**
WIS 73 (south)	*-* **-**	*347* **823**	*64* **144**	*20* **29**	*795* **451**	*-* **-**	*116* **60**	*-* **-**	*15* **28**	*-* **-**	*-* **-**	*-* **-**
WIS 134	*6* **7**	*315* **1042**	*-* **-**	*-* **-**	*844* **494**	*33* **57**	*-* **-**	*-* **-**	*-* **-**	*59* **77**	*-* **-**	*9* **9**
US 18	*146* **437**	*258* **533**	*-* **-**	*-* **-**	*587* **328**	*57* **71**	*-* **-**	*-* **-**	*-* **-**	*57* **58**	*-* **-**	*193* **58**
County PQ/Water St	*-* **-**	*286* **614**	*8* **15**	*31* **41**	*497* **405**	*-* **-**	*11* **28**	*-* **-**	*40* **59**	*-* **-**	*-* **-**	*-* **-**
County B/Spring St	*7* **26**	*300* **572**	*39* **61**	*41* **28**	*476* **395**	*14* **10**	*29* **34**	*1* **6**	*43* **34**	*-* **-**	*-* **-**	*-* **-**
Simonsen St	*92* **58**	*313* **667**	*-* **-**	*-* **-**	*497* **409**	*13* **20**	*-* **-**	*-* **-**	*-* **-**	*5* **20**	*-* **-**	*88* **55**
County J	*4* **9**	*257* **462**	*2* **8**	*0* **0**	*282* **367**	*0* **2**	*7* **2**	*3* **5**	*1* **2**	*1* **6**	*4* **10**	*6* **12**
County G	*0* **6**	*262* **471**	*-* **-**	*-* **-**	*293* **349**	*26* **77**	*-* **-**	*-* **-**	*-* **-**	*45* **42**	*-* **-**	*1* **4**
County C/Hoard Rd	*6* **3**	*428* **419**	*4* **2**	*49* **86**	*429* **420**	*3* **8**	*2* **5**	*12* **6**	*83* **54**	*1* **4**	*3* **9**	*5* **5**
WIS 26 SB ramps	*-* **-**	*443* **495**	*85* **41**	*58* **81**	*416* **501**	*-* **-**	*-* **-**	*-* **-**	*-* **-**	*33* **78**	*3* **3**	*6* **26**
WIS 26 NB ramps	*16* **20**	*449* **569**	*-* **-**	*-* **-**	*372* **512**	*68* **84**	*89* **50**	*0* **0**	*110* **94**	*-* **-**	*-* **-**	*-* **-**

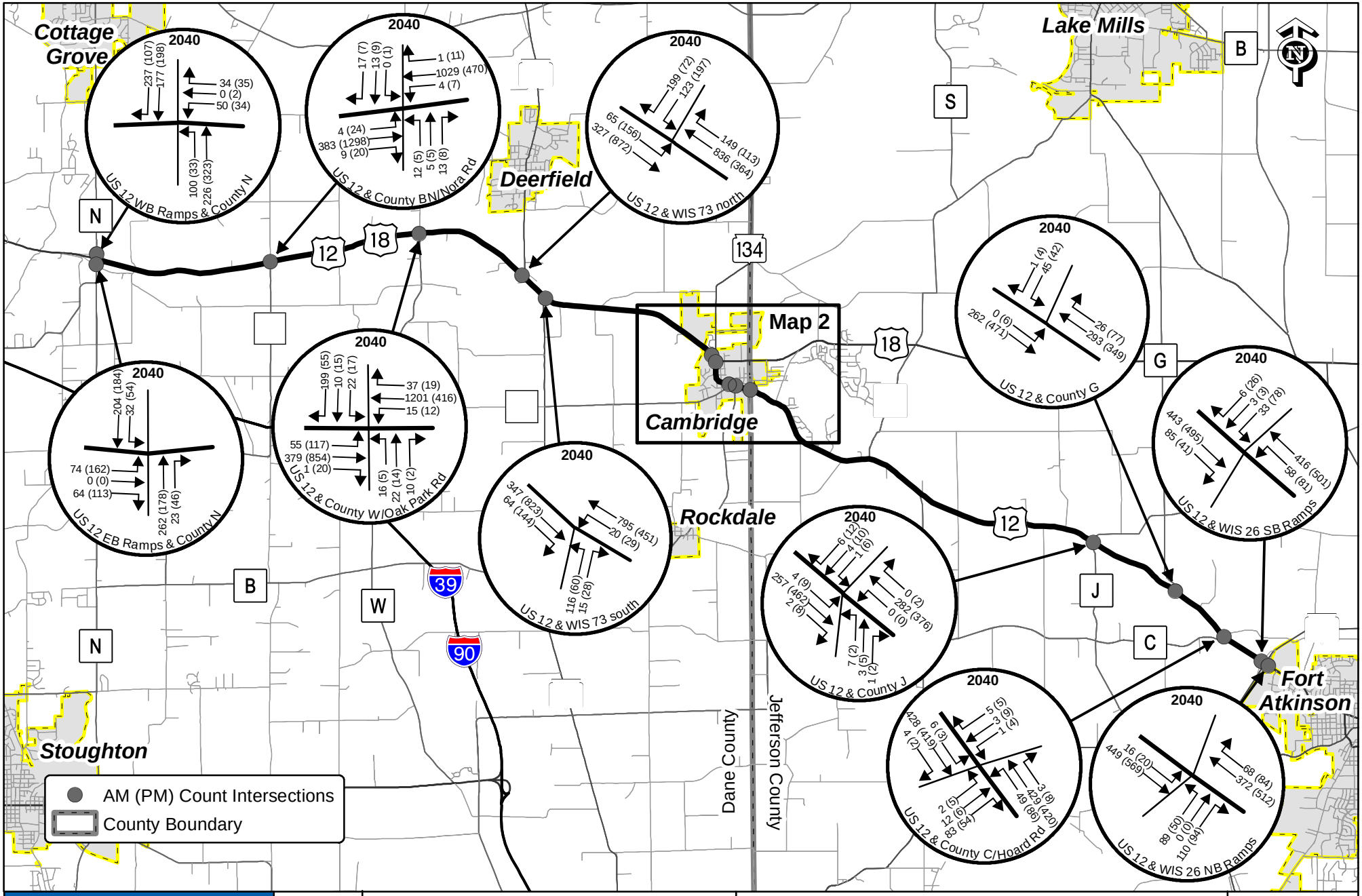

TranSmart	Not To Scale	US 12 Corridor Study	2040 Forecast Peak-Hour Intersection Volumes	Exhibit 8 Map 1

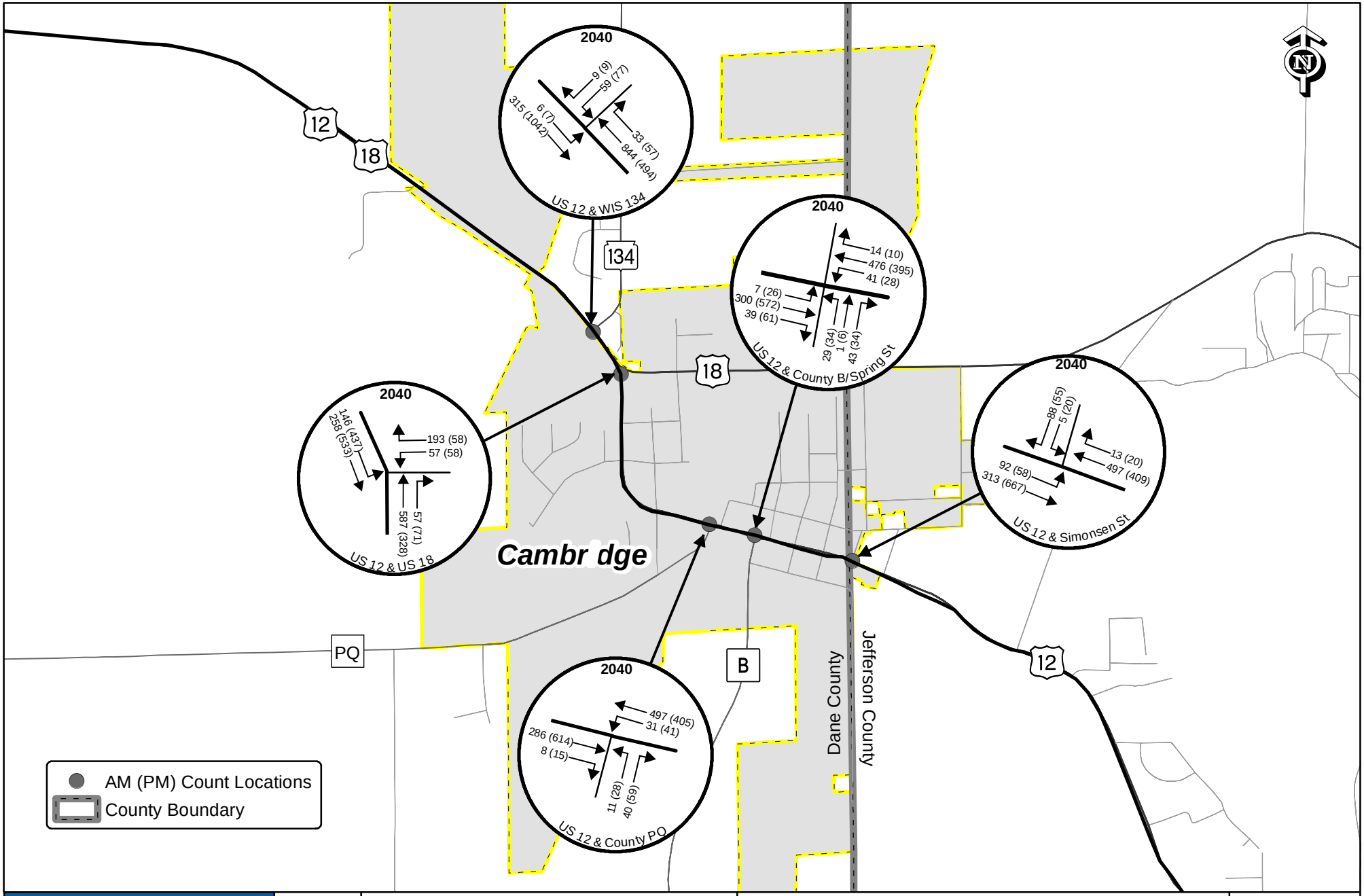

TranSmart	Not To Scale	US 12 Corridor Study	2040 Forecast Peak-Hour Intersection Volumes	Exhibit 8 Map 2

4.2 Level of Service Analysis

Analyses were performed to determine the long-term function of US 12 in its existing configuration. *All traffic capacity and operational analyses were performed using HCS Plus software and the 2010 Highway Capacity Manual (HCM) methodology in accordance with the WisDOT Facilities Development Manual (FDM Procedure 11-5-3).* Each of the four rural segments, intersections, and interchange ramps on the US 12 study corridor was evaluated by determining a level of service (LOS) from the analysis. LOS is a letter grade assigned to a transportation facility to designate the quality of operations or extent of delay. The grades range from A (best) to F (worst):

- LOS A — primarily free-flow operations at average travel speeds; unimpeded maneuvering; delay at intersections is minimal
- LOS B — reasonably unimpeded operations; average travel speeds; maneuvering is only slightly restricted; unsubstantial delay at intersections
- LOS C — stable operations; maneuvering and lane-changing is more restricted than at LOS B; lower travel speeds but good throughput
- LOS D — typical operations goal; generally stable operations; small increases in flow can cause larger increases in delay and decreases in speed
- LOS E — congestion; unstable operations; significant delays; low travel speeds; commonly occurs when a facility is near capacity
- LOS F — extremely low speeds; significant congestion; extensive queuing; usually indicates an over-capacity condition

WisDOT has established level of service goals for the acceptable functioning of highway facilities in urban and rural areas. For a Corridors 2030 Connector Route like US 12, the operational goal in rural areas is LOS C or better, and mid-D in urban areas (middle D refers to the value of 4.5 on a numeric scale of LOS D, 4.01 to 5.0). When the level of service on a facility is lower than normally acceptable standards, WisDOT may consider improving it through incremental improvements or capacity expansion. Implementing large-scale improvement and capacity expansion projects depends on priorities set by the state legislature.

Mainline Segment Level of Service Analysis

A level of service analysis was conducted based on existing and projected traffic volumes for the US 12 study corridor. Table 33 on the following page details the peak-hour levels of service and percent time spent following (PTSF) for the four rural segments of US 12 analyzed through 2040, using WisDOT standards to determine LOS values for those segments. PTSF is a primary determinant of LOS values for a corridor such as US 12, where traffic usually travels at speeds at or above the posted speed limit but platooning often frustrates drivers. Figure 17 on the following page illustrates the LOS of each segment and key intersections of the US 12 corridor for 2011 and 2040.

Table 33 US 12 segment levels of service and percent time spent following for the design hour (peak flow direction/non-peak direction)

	2011		2020		2030		2040	
Segment	**LOS**	**PTSF**	**LOS**	**PTSF**	**LOS**	**PTSF**	**LOS**	**PTSF**
AB: County N to WIS 73 (south)	E/C	81/63	E/D	84/69	E/D	87/71	E/D	89/74
C: WIS 73 (south) to US 18	E/C	83/64	E/D	84/66	E/D	86/69	E/D	88/72
E: Park Road to County J	D/C	80/60	E/C	82/63	E/C	83/64	E/D	84/66
FG: County J to WIS 26	D/C	79/60	E/C	81/63	E/D	84/66	E/D	86/68

Figure 17 Segment and intersection levels of service

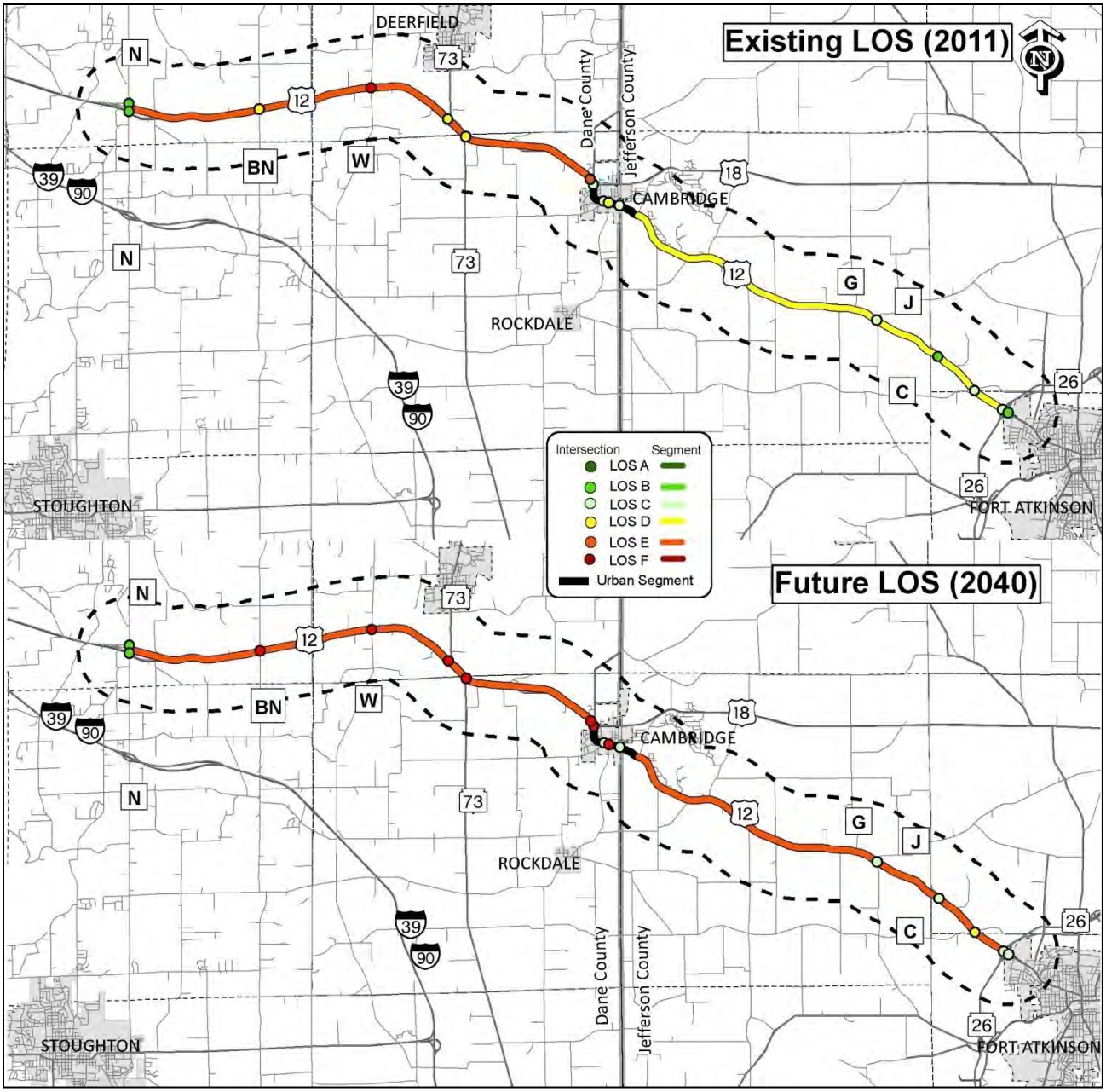

*This graphic illustrates worst case LOS for Intersections.

Figure 18 below shows level of service for ranges of percent time spent following (PTSF) for a Class I highway such as US 12, as provided in *Highway Capacity Manual 2010*. Vertical solid and dashed lines on the bars represent PTSF values (as listed in table 33) for the base and forecast years.

Figure 18 US 12 level of service as a function of percent time spent following

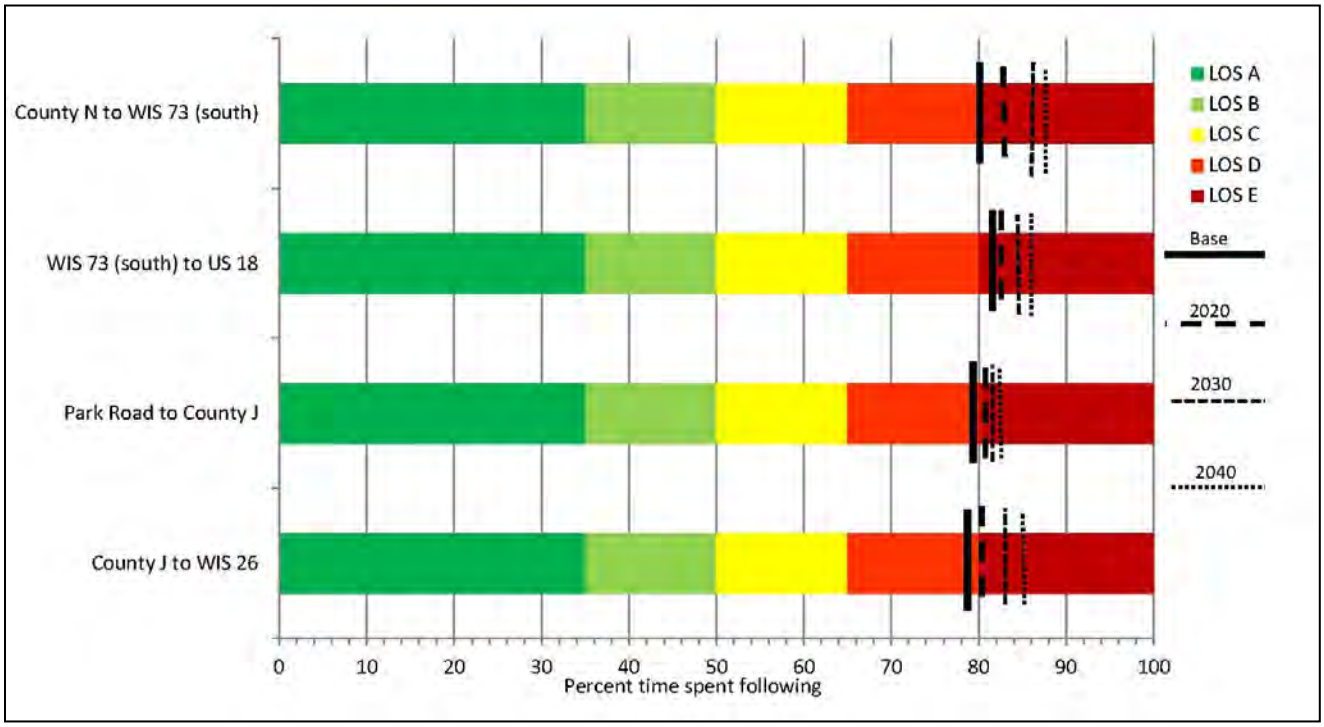

As indicated by the bar graphs in figure 18, PTSF values above 80 are associated with LOS E for all rural US 12 corridor segments. Levels of service for the Base year (2011) design hour are LOS D for segments east of Cambridge and LOS E west of Cambridge. PTSF values and levels of service would progressively worsen if future traffic volumes meet or exceed WisDOT forecasts (see table 31 for forecast traffic volumes).

Intersection Level of Service Analysis

All of the intersections and interchange ramps on the US 12 study corridor are unsignalized and were analyzed using HCS software. 2011 turn counts and WisDOT forecasts through 2040 were analyzed using HCS software to estimate levels of service and delay. Table 34 shows performance indicators for four interchange ramps and 12 select intersections along the corridor during AM and PM peak hours. Although most intersections along the US 12 corridor currently function at acceptable levels of service, four currently operate at LOS F in the PM peak hour, and the function of seven intersections in or west of Cambridge are projected to worsen to LOS E or F by 2030. Intersection level of service along the corridor is illustrated in figure 17.

Table 34 Peak-hour LOS ratings for worst approach, with delay times, at corridor intersections (AM/PM)

	2011		2020		2030		2040	
Intersections (AM/PM)	LOS	Delay (sec)	LOS	Delay (sec)	LOS	Delay (sec)	LOS	Delay (sec)
County N EB off-ramp	B/B	11/11	B/B	11/12	B/B	11/13	B/B	12/13
County N WB off-ramp	B/B	12/11	B/B	12/12	B/B	13/12	B/B	14/12
County BN/Nora Rd	D/F	31/51	E/F	40/75	F/F	54/114	F/F	73/178
County W/Oak Park Rd	F/F	187/70	F/F	378/106	F/F	647/190	F/F	1327/1598
WIS 73 (north)	C/F	24/287	E/F	44/431	F/F	66/653	F/F	108/944
WIS 73 (south)	D/C	31/23	E/D	39/27	F/D	56/33	F/E	80/39
WIS 134	C/E	25/40	D/F	29/56	E/F	37/90	E/F	49/166
US 18	C/F	20/62	C/F	23/105	D/F	27/168	D/F	34/283
County PQ/Water St	B/C	12/17	B/C	12/18	B/C	13/20	B/C	13/23
County B/Spring St	C/D	16/26	C/D	18/32	C/E	20/40	C/F	22/52
Simonsen St	B/B	14/15	B/C	15/17	C/C	16/19	C/C	17/20
County J	B/C	15/15	C/C	15/16	C/C	17/18	C/C	18/20
County G	B/B	12/13	B/B	13/14	B/B	14/15	B/C	14/15
County C/Hoard Rd	C/C	18/19	C/C	19/20	C/C	20/23	C/D	23/26
WIS 26 SB off-ramp	B/C	15/17	C/C	15/18	C/C	16/19	C/C	17/22
WIS 26 NB off-ramp	B/B	13/12	B/B	14/12	B/B	14/13	C/B	15/14

Note: LOS is for worst approach for intersection displayed. US 12 thru and right movements are free-flow.

Analysis of existing traffic indicates that four intersections within and west of Cambridge are currently operating at LOS E or F during the PM peak hour: County BN/Nora Road, County W/Oak Park Road, WIS 73 (north), and US 18. County W/Oak Park Road is operating at LOS F in the AM peak hour, the worst performing intersection during the AM peak hour; the worst approach experiences 187 seconds of delay at this time. WIS 73 (north) experiences the most delay during the PM peak hour with 287 seconds of delay.

Levels of service are expected to worsen through 2040 at all corridor intersections. By 2040, seven intersections are forecast to experience LOS F at some time of the day.

As traffic volumes increase along US 12, it is anticipated that some intersections will need to be improved to accommodate additional capacity needs. In addition, other intersections may experience issues related to gaps on US 12. As traffic increases, the number and size of gaps on US 12 will likely decrease resulting in greater difficulty entering the highway from side roads. This would result in longer wait times that could increase the likelihood of high-risk driver behavior and potentially more crashes.

There are numerous intersections along the rural US 12 segments that were not included in the traffic counts conducted in 2011. Their two-way average daily volumes (ADTs) are estimated to be well below 400, and in most cases well under 100. At these volumes, side roads along US 12 are anticipated to experience LOS D or better from 2011 through 2040 for the rural segments studied.

4.3 Preliminary Signal Risk Assessment

Intersections within the US 12 study corridor were evaluated at a preliminary level to identify those that could be candidates for a future traffic signal. The evaluation was completed by comparing major road and side road current and future ADTs to minimum threshold volumes in table 35 since all intersections evaluated were within areas having a population of less than 10,000. Minimum threshold volumes are identified in FDM 11-50-50. *The conclusions from this study are not determining factors for the installation of a new traffic signal. More in depth analyses that evaluate the Federal Highway Administration's (FHWA) eight traffic signal warrants would be required to reach a final conclusion.*

Table 35 Minimum threshold traffic volumes (rural)

Lanes per approach		Case 1		Case 2	
Major Street	Minor Street	Major Street (2-way ADT)	Minor Street (2-way ADT)	Major Street (2-way ADT)	Minor Street (2-way ADT)
1	1	5,600	3,400	8,400	1,700
2	1	6,700	3,400	10,100	1,700

Sources: WisDOT FDM Procedure 11-50-50*;* and Institute of Traffic Engineers*, Manual of Traffic Signal Design.*

Based on the thresholds in table 35 above, five unsignalized intersections were evaluated against the minimum threshold volumes for traffic signals. These intersections are shown in table 36 below, along with the year the thresholds were met for Case 1 and Case 2 and the ADT values during that year. The intersections at WIS 73 (north) and US 18 met the criteria for Case 1 in 2011, while County W/Oak Park Road, WIS 73 (north), and WIS 73 (south) met Case 2 criteria in 2011. With additional data collection as well as a formal intersection control evaluation (ICE), these intersections could be evaluated to determine if traffic signals are warranted.

Table 36 US 12 intersections that exceed minimum threshold traffic volumes

		Case 1		Case 2	
Intersections	Urban/ Rural	Year reached	ADT (US 12/minor)	Year reached	ADT (US 12/minor)
County W/Oak Park Rd	Rural	–	–	2011	12,508/2,201
WIS 73 (north)	Rural	2011	12,624/4,517	2011	12,624/4,517
WIS 73 (south)	Rural	–	–	2011	12,025/1,997
US 18	Urban	2011	10,764/4,848	2040	12,300/8,000

4.4 Safety Analysis

Crash Analysis

This section summarizes the findings of the *Safety Analysis Report*, which can be found in its entirety in Appendix A. Crash data for the corridor for the five-year period from 2005 through 2009 was provided by WisDOT. For the purposes of analysis, the corridor was divided into five segments (see figure 19): four rural segments and one urban segment that includes Cambridge. Segmentation has been determined by WisDOT Meta-manager roadway classifications and the needs of traffic operations analysis (as determined by traffic volumes and speed zones within the corridor). The segments are described as follows:

- Segment AB—Located between County N and the intersection with WIS 73 (south leg). This is a 7.0-mile long rural segment with a posted speed limit of 55 mph and no signalized intersections. It includes the operational areas of both WIS 73 intersections. About ¾-mile of US 12 east of County N is four-lane divided highway (sub segment A), while the remainder of Segment AB is two-lane (sub segment B).
- Segment C—Located between WIS 73 (south leg) and the intersection with US 18/Jefferson Street in Cambridge, this 2.7-mile rural segment includes several driveways. The posted speed limit is 55 mph for the majority of this segment.
- Segment D—Located between US 18/Jefferson Street and Park Road, this 1.2-mile urban segment includes the village of Cambridge and part of the unincorporated urban service area adjacent to Lake Ripley. It has no signalized intersections and 25 and 35 mph posted speed zones.
- Segment E—Located between Park Road and County J, this 5.3-mile rural segment transitions from semi-urbanized to agricultural zones. The posted speed limit is 45 mph and 55 mph within this segment.
- Segment FG—Located between County J and WIS 26 at the city of Fort Atkinson, this is a 3.1-mile rural segment with a posted speed limit of 55 mph. There are no signalized intersections on this segment. About ½-mile of US 12 near WIS 26 is four-lane divided highway (sub segment G); the remainder of Segment FG is two-lane (sub segment F).

Figure 19 US 12 segments for crash analysis

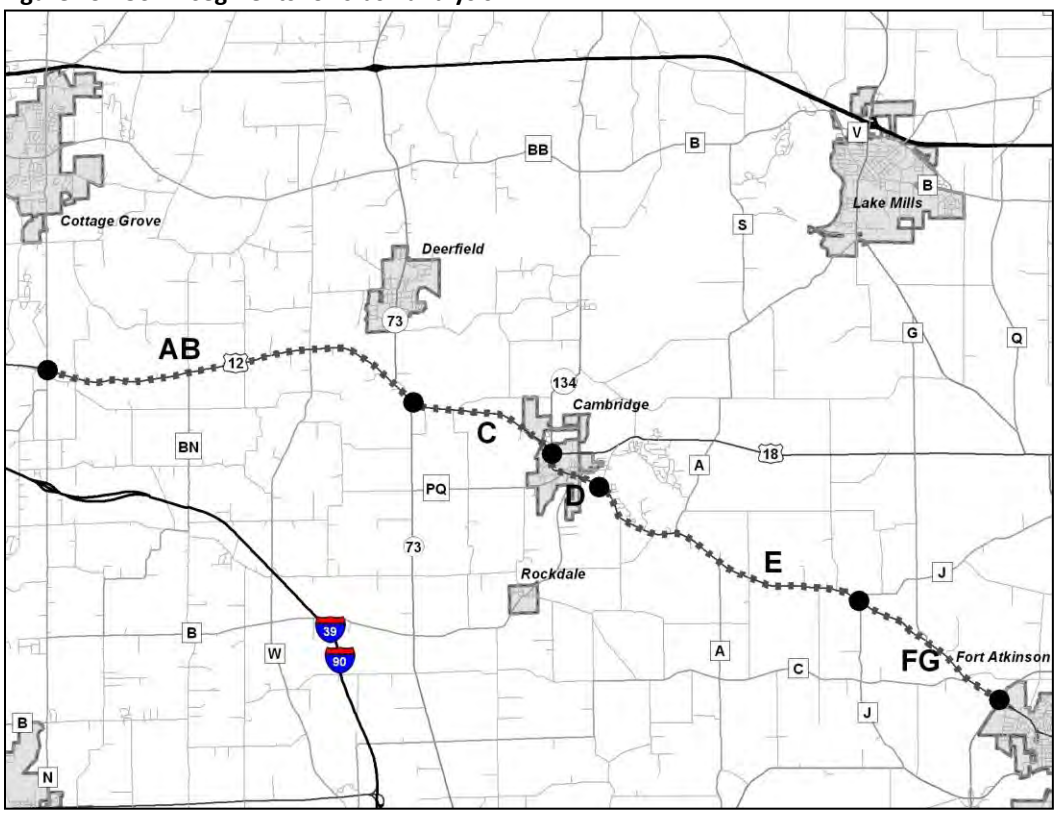

Crash rates were calculated for each of the segments and for all of the intersections within the corridor. A five-year crash analysis was performed for crashes occurring between 2005 and 2009. The crash rates generated from the analysis were compared to statewide averages for similar highway segments (among the 12 Meta-manager functional state trunk highway groups) over the same period of time.

While the majority of the study corridor is classified as rural state highway, the traffic conditions for Segment D within and near Cambridge more closely resemble those of an urban state highway. Within this segment, the posted speed limit is 25 or 35 mph and there is cross traffic from numerous local road and private driveway intersections. These conditions result in differences in both the number and types of crashes. For this reason, it is not possible to compare the crash rate for the entire highway corridor to a single statewide rate. Instead, Segment D is compared to the statewide rates for functional group 12 roadway (state highways in communities of fewer than 5,000 people), which includes urban state highways, and the rural segments are compared with the rates for rural state highways.

In addition to crash rates, the types and severity of crashes and the factors that contributed to crashes were analyzed to determine if there were patterns that indicated possible safety issues as a result of the existing geometry of the highway or intersections.

Corridor Crash Rates

A total of 241 non-deer crashes occurred within the study area in the five-year period between 2005 and 2009. Intersection-related crashes accounted for 90 (37 percent) of the total non-deer crashes as shown in table 37 below.

Table 37 US 12 segment and intersection crash totals

	Total Crashes		Non-Intersection Crashes			
Segment	With Deer	w/out Deer	With Deer	w/out Deer	Intersection Crashes	Deer Crashes
AB—County N to WIS 73	155	106	118	70	35	48
C—WIS 73 to US 18/Jefferson St	112	28	108	24	4	84
D—US 18 to Park Rd	47	47	21	21	25	0
E—Park Rd to County J	70	29	61	20	13	41
FG—County J to WIS 26	56	30	43	17	13	26
Entire Corridor	440	241	350	151	90	199

Of the total crashes, 283 (64.3%) were single vehicle non-collision type crashes including 199 (45.2%) crashes that involved collisions with deer. Corridor deer crashes are examined in further detail in section G, Deer Crashes and Mitigation.

Table 38 below shows US 12 segment crash data and rates (per 100 million vehicle miles). Segment AB experienced four fatal crashes and Segment C experienced one fatal crash; both segments had fatal crash rates above the state rate for their functional peer group (rural state highway with ADT greater than 8,700), while only Segment D had a crash rate and injury crash rate above the statewide average for its functional peer group (state highway in communities of fewer than 5,000 people). Segment rates above statewide rates are noted with bold type.

Table 38 US 12 segment crash data (excluding deer crashes) and rates (per 100 million vehicle miles)

Segment	Crashes	Crash Rate	State Crash Rate*	Fatal Crashes	Fatal Crash Rate	State Fatal Crash Rate*	Injury Crashes	Injury Crash Rate	State Injury Crash Rate*
AB—County N to WIS 73	107	73	87	4	**2.7**	1.1	40	27	32
C—WIS 73 to US 18/Jefferson St	28	60	87	1	**2.2**	1.1	10	22	32
D—US 18 to Park Rd	47	**215**	195	0	0.0	0.9	16	**73**	58
E—Park Rd to County J	29	48	76	0	0.0	1.3	15	25	33
FG—County J to WIS 26	30	65	76	0	0.0	1.3	5	11	33

*For the segment functional peer group, as determined by Meta-manager.

Intersection Crashes

There are 52 public road intersections within the corridor, 28 of which experienced crashes during the years studied. Crash rates for each of the intersections, as shown in table 39, are well below a crash rate of 1.5 per million entering vehicles, a threshold that is generally considered to indicate a potential safety issue that may require further evaluation. However, additional criteria such as how the crash rates of individual intersections within a corridor compare against each other and crash

severity are also considered when evaluating intersection safety. Intersections with higher crash rates compared to others in a corridor and those with severity rates above 30 percent may also be candidates for further study.

Intersections at the County N interchange, County W/Oak Park Road, WIS 73 (north leg), WIS 73 South Leg and US 18/Jefferson Street were identified as having potential safety issues based on an initial analysis of the crash records. County W/Oak Park Road and US 18/Jefferson Street each experienced more than five crashes during the study period and had significant crash severity rates (50 and 43 percent, respectively), defined as more than thirty percent of the crashes at the intersection resulting in injury. Furthermore, comparing intersection crash rates can illuminate possible safety issues. County N, WIS 73 (north leg), US 18/Jefferson Street, and WIS 26 had the highest crash rates in the corridor.

Table 39 Intersection crash data

Intersection	Total Crashes	Estimated Entering Volume	Intersection Crash Rate[1]	Severity (percent)
County N (@ EB ramps)	7	7,400	0.52	29
North Star Road	2	10,400	0.11	0
County BN/Nora Road	7	12,700	0.30	29
Deerfield Road	0	10,600	0.00	0
Thorstad Lane	1	10,600	0.05	0
John Deere Lane	1	10,600	0.05	0
County W/Oak Park Road	8	12,175	0.36	50
Sunny Lane	1	11,500	0.05	0
Nuland Road	1	11,500	0.05	0
Mikkelson Farm Road	0	13,500	0.00	0
WIS 73 (north leg)	18	15,400	0.64	33
WIS 73 (south leg)	4	12,950	0.17	50
Fadness Road	1	9,400	0.06	0
Clear View Road	0	9,400	0.00	0
State Farm Road	3	9,400	0.17	33
Rodney Road	2	9,400	0.12	50
Kenseth Way	0	9,400	0.00	0
WIS 134	0	9,900	0.00	0
US 18/Jefferson Street	14	12,700	0.60	43
Pinecrest Drive	0	10,000	0.00	0
Madison Street	6	10,000	0.33	0
Pleasant Street	1	10,000	0.05	100
Water Street/County PQ	6	9,100	0.36	17
Mill Street	0	8,100	0.00	0
Spring Street/County B	5	9,400	0.29	0
Park Street	0	8,600	0.00	0
Lawn Street	2	8,600	0.13	0
High Street	1	8,600	0.06	100
Simonson Street	0	9,000	0.00	0
2nd Street	0	8,600	0.00	0
Park Road	1	9,800	0.06	0
Alpine Village Lane	3	6,200	0.27	33
Golf Side Lane	0	6,200	0.00	0
Sleepy Hollow Road	0	6,200	0.00	0
Porter Drive	0	6,200	0.00	0
Cedar Road	0	6,200	0.00	0
Marina Lane	0	6,200	0.00	0
Island Lane	1	6,200	0.09	100
Airport Road	0	6,200	0.00	0
Meadow Drive	0	6,200	0.00	0
County A (North)	0	6,600	0.00	0
Brosig Lane	0	6,200	0.00	0
County A (South)	0	6,370	0.00	0
Oakland Road	2	6,700	0.16	0
Oestreich Lane	2	6,200	0.18	50
Trieloff Road	2	6,200	0.18	100
Ehrke Lane	0	6,200	0.00	0
County J	0	6,630	0.00	0
County G	0	10,000	0.00	0
Radloff Lane	0	8,600	0.00	0
County C/Hoard Road	6	9,100	0.36	17
WIS 26[2]	11	9,750	0.62	9

[1]Per million entering vehicles. [2]Crashes not precisely located at specific interchange intersections or freeway ramps.

IHSDM Analysis

The Federal Highway Administration's Interactive Highway Safety Design Model (IHSDM) was used to evaluate the rural two-lane roadway segments of US 12. Detailed results of this evaluation can be found in the report *Existing Conditions Evaluations*, located in Appendix K. The IHSDM was used to predict crash rates, evaluate design and design consistency, and analyze traffic. Table 40 below identifies US 12 corridor intersections that are expected to experience at least one crash per year, based on the IHSDM.

Table 40 IHSDM expected intersection crash rates

Intersection	Expected crashes per year
County W/Oak Park Road	4.85
WIS 73 (north)	8.05
WIS 73 (south)	4.07
WIS 134	3.10
County A (north)	1.41
County A/Langhoff Lane	1.40
County J	1.63
County C/Hoard Road	4.61

The design consistency evaluation found Condition 1 for the corridor as a whole, meaning that posted speeds did not present problems for drivers along a majority of the corridor. However, Condition 2 was determined just west of Cambridge where the speed limit changes suddenly from 45 mph to 25 mph. The change in posted speed at this location may need to be evaluated further due to this classification.

4.5 Travel Time Study

A travel time study of the US 12 corridor between County N and WIS 26 was conducted in March 2011 (see Appendix H for the full findings of the study). Travel times along the corridor in each direction were very consistent, averaging 21 minutes 36 seconds, whether traveling eastbound or westbound. Travel times for the entire corridor differed slightly only by time of day. For eastbound travel of the corridor, afternoon peak-hour travel times averaged 32 seconds faster than morning travel times. For westbound travel, the reverse was true: morning peak-hour travel times averaged 19 seconds faster than afternoon travel times. During morning westbound and afternoon eastbound travel runs, shorter travel times were due to slightly higher travel speeds.

4.6 Truck Origins and Movements through Cambridge

The *US 12 Corridor Truck Origin Study* (which can be found in its entirety in Appendix H) was undertaken to estimate the distribution of truck origins on the corridor. Trucks make up a large portion of all traffic in the US 12 study corridor, and thus their presence has ramifications for highway safety and function, in addition to the economic vitality of US 12 corridor communities. Based on tube count data collected in summer 2011, trucks were estimated to make up nine percent of all vehicles on the study corridor west of WIS 73, ten percent between WIS 73 and the US 18 intersection (in Cambridge), eleven percent between US 18 and County J, and twelve percent east of County J.

At the time of the study, trucks based in the Madison-Fort Atkinson region made up about half (50.6 percent) of all trucks traveling on US 12. It also found that about half (49.4 percent) of all trucks are based beyond the region, in other parts of Wisconsin and other states in the Midwest, such as Illinois, Iowa, Minnesota and Michigan. About 20 percent of all trucks were based outside of Wisconsin.

The amount of semi-truck traffic on Main Street in Cambridge is a concern of local residents. In the morning peak period (6 to 9 a.m.), 177 total trucks were counted traveling on US 12/Main Street into or out of Cambridge. Of these, 71 (40.1%) were semi-trucks, with 40 traveling eastbound and 31 traveling westbound. In the afternoon (3 to 6 p.m.), 147 trucks were counted. Of these, 44 (29.9%) were semi-trucks, with 21 headed eastbound and 23 traveling westbound.

4.7 Deer Crashes and Mitigation

Deer crashes comprise a very prominent share of all crashes on the US 12 study corridor. There were 199 deer crashes on the corridor from 2005 to 2009, comprising about 45 percent of all crashes during this time period. Deer crash data for each of the five segments of US 12 under study can be seen in table 41 below. The segment of US 12 located between WIS 73 and US 18 had an extremely high deer crash rate that was more than twice the rate of any other segment on the corridor. This segment experienced 84 deer crashes, or 75 percent of all crashes that occurred in the five-year study period. The segment's length of 2.7 miles and traffic volume of 9,500 AADT (annual average daily traffic) translates to a deer crash rate of 179 per 100 million vehicle miles.

Table 41 Deer crashes and crash rates on US 12 segments, 2005 to 2009

Segment	Segment length (miles)	Total crashes	Deer crashes	Deer crash share of total (%)	Deer crash rate*
County N to WIS 73	7.0	155	48	31	34
WIS 73 to US 18	2.7	112	84	75	179
US 18 to Park Road	1.2	51	0	0	0
Park Road to County J	5.3	66	41	62	67
County J to WIS 26	3.1	56	26	46	51

*Per 100 million vehicle miles

The high deer crash rate for this segment suggests that mitigation measures could be explored to attempt to reduce deer crashes. A preliminary examination of US 12 corridor crash data indicates that the months of April, November, December and January experienced the highest incidence of deer crashes during the year.

Numerous deer crash mitigation measures have been studied in Wisconsin and other states in recent years; however, very few have proven to be effective. Four mitigation measures might prove to be useful at select locations in Wisconsin: limited corridor fencing, grade-separated wildlife crossings, deicing salt alternatives, and nonstandard and temporary seasonal driver warning devices.

Limited corridor fencing has been used in other parts of the United States, particularly western states. Fencing is used to guide wildlife away from highway corridors, or to channel animals to cross highways via grade-separated crossings. Studies indicate that fences must be at least eight feet tall to be effective at reducing whitetail deer crashes.

Grade-separated crossings have been successfully used in western states, particularly Colorado, Montana, Arizona and Utah, to guide wildlife safely across highways. Fencing is often used in conjunction with grade-separated crossings to properly guide animals toward the intended crossings. Studies suggest that deer prefer to use wide vegetation-covered overpasses or large open underpasses. Successful overpasses are generally at least 100 feet wide. Minimum design criteria for underpass openings are 7 to 8 feet in height and 20 to 25 feet wide, although larger openings are recommended for greater effectiveness.

Substituting an **alternative deicing substance** for standard road salt could be effective at reducing the presence of deer in the corridor during snowy months. Certain wildlife species (such as deer and

moose) are attracted to salt due to mineral deficiencies in their diets, which could be attracting deer to the roadway during winter.

Animal detection systems have been found to be effective in specific circumstances, but are still considered to be experimental. Such systems use sensors to detect movement near the roadway, then alert drivers with flashing lights or other warning devices. Some studies indicate that large reductions in animal-vehicle collisions are possible in controlled circumstances. However, false alerts are not uncommon. Reviews of this mitigation measure indicate that deployment sites must be suitable to match system capabilities, a period of calibration is required, and ongoing maintenance needs are not trivial.

Nonstandard and temporary seasonal warning devices have been found to be moderately effective at reducing the incidence of deer crashes in short lengths of highway corridor. It has been shown that warning devices, if they are temporary and highly visible to drivers (to include the use of flashing lights, variable message signs, and deer carcasses), can effectively encourage drivers to reduce vehicle speeds, which then allows them additional time to react to wildlife on the road.

Sources: "Deer-Vehicle Crash Countermeasure Toolbox: A Decision and Choice Resource," Midwest Regional University Transportation Center, Deer-Vehicle Crash Information Clearinghouse, University of Wisconsin-Madison, 2004 (http://www.deercrash.com).

For additional resources and ideas, see also the Wildlife and Roads website at http://www.wildlifeandroads.org/.

Part III Strategies and Recommendations & Access Management Plan

Part III of the study report provides short and long-term strategies and recommendations for the US 12 corridor within the study area. Discussion is organized into the following sections:

1. Mainline and intersection improvement strategies
2. Long-term access management
3. Other strategies

Part III identifies strategies and recommendations that, if implemented, would extend the useful life of the existing facility for as long as possible. In addition, the strategies are complementary: implementation of one does not preclude the implementation of the others, they can be implemented incrementally as warranted, and once ultimately completed, US 12 would function as an integrated system.

The focus of this portion of the report is on corridor preservation. The traffic analysis and forecasts reveal that portions of the corridor currently, or are anticipated to, experience poor operational performance (LOS D or worse) between now and 2040. The strategies and recommendations were conceived with the assumption that capacity expansion or bypass options would not be implemented prior to 2040 due to competition with higher priority projects or funding limitations.

Bypass corridors and capacity expansion are outside the scope of this study. At the time this study was initiated, WisDOT was not granted authority by the Wisconsin state legislature to study these types of improvements. Regardless of any possible enabling legislation, it is anticipated that even if WisDOT was tasked to consider a bypass or capacity expansion project for US 12, the effort would take several years to study, follow the necessary NEPA requirements, coordinate with other agencies, conduct preliminary and final design, acquire real estate, mitigate effects, and construct. It is likely corridor operational performance would reach problematic levels before such an undertaking could be completed, validating the need for this study and its strategies for preserving the long-term function of the existing corridor.

1.0 Improvement Strategies

1.1 Mainline Strategies

The US 12 corridor is recommended to be maintained as a two-lane facility. Improvements are recommended where the function and safety of the roadway are anticipated to decline in the future.

New Parallel Alignment

Mainline improvements are recommended at only one location within the study area, just east of Cambridge within Jefferson County, from west of Park Road to just east of Airport Road. The mainline recommendation can be seen on exhibit 9 on the next page. The recommendation consists of relocating portions of US 12 onto a new parallel alignment and using the existing highway as a service road to provide property and public road access. US 12 through this area currently has eleven public access locations and sixteen private access locations. The new alternative straightens three curves on US 12 as the corridor departs Cambridge (traveling east), and reduces direct access to US 12 between Park Road and Airport Road to five local road access locations and two private access locations. The alternative also includes installation of right-turn lanes and tee intersection bypass lanes at Park Road, Sleepy Hollow Road, Cedar Road, Majestic Circle, and Airport Road.

TranSmart	Not to Scale	US 12 Corridor Study	Mainline Improvement Strategy	Exhibit 9

Passing Lanes

Passing lanes are a useful design measure in particular circumstances on two-lane rural highways. Passing lanes can be used to improve a highway's level of service by reducing vehicle percent time spent following (PTSF) and improve travel time in locations wherever slow-moving vehicles are common. FDM procedure 11-15-10, Passing Lanes and Climbing Lanes, provides criteria to determine the circumstances where the addition of passing lanes to a rural state highway could be appropriate. FDM 11-15-10 identifies the following general guidelines for locating passing lane segments:

1. Passing lanes should be constructed in segments of highway that have a minimal number of entrances, and preferably no side roads. Commercial driveways could be particularly problematic. Avoid segments having side roads with traffic volume at or above 500 ADT.
2. Driveways and field entrances should be avoided in the merge taper area on either side of the highway. No driveways or intersections should be located closer than 500 feet from the end of the downstream taper. Passing lane approach and merge taper lengths should be 700 feet.
3. Avoid passing lanes on horizontal curves greater than three degrees, if possible.
4. Minimize the occurrence of 4-lane segments of undivided highways (overlapping passing lane areas).
5. A widened segment of roadway, with protected left-turn lanes, may be constructed in a passing lane section when left-turn volumes are significant.
6. If the comparative cost for construction of passing lanes in rolling and level terrain is nearly the same, it may be desirable to construct them in the rolling terrain at locations where passing sight distance is unavailable.

The optimal length of a passing lane is a function of a highway's design hour volume (DHV). Optimal passing lane lengths are shown in table 42 below.

Table 42 Optimal passing lane length

Two-way total DHV	Length of passing lane (miles)
Less than 600	½ – 1
600 – 1,000	¾ – 1½
1,000 – 1,400	1 – 2

Source: FDM 11-15-10 Passing Lanes and Climbing Lanes

WisDOT's Connections 2030 plan identifies the US 12 study corridor west of Cambridge as a candidate for capacity expansion, which could include passing lanes. An initial evaluation of the corridor using HCM 2000 methodology determined that the addition of passing lanes on US 12 would reduce vehicle platooning and therefore improve corridor operations. However, vehicle speed and location of access along the corridor must be considered when studying the application of passing lanes.

The US 12 corridor currently does not experience significant variations from the free-flow travel speed. Travel time studies have found that vehicles more often than not exceed the posted speed limit on the corridor. Typically, passing lanes are placed in locations where vehicles increase their

speed to pass slower moving vehicles. When considering that crash severity increases as vehicle speeds increase, the addition of passing lanes and the potential for increased vehicle speeds should therefore be a consideration in implementing passing lanes at any specific location.

Access, terrain, and location in relation to urbanized areas are important factors to consider when siting passing lanes in order to maximize safety and optimize the effectiveness of the passing lanes. Passing lanes should be situated in strategic locations to maximize their benefit, such as on the departure side of urbanized areas near speed limit transition areas. However, there are numerous public and private accesses along US 12 within the study area, a factor which leaves few locations where a passing lane treatment could safely be sited.

When considering geometric constraints (access, terrain, and geographic location), there is only one location on US 12 west of Cambridge where an adequate length of passing lane (minimum of one mile) could be provided. The most suitable location for passing lanes is between State Farm Road and Kenseth Way, a 1.5-mile stretch of US 12 where a passing lane could be configured. In this segment, the 2030 and 2040 DHVs are 1,400 and 1,520, respectively. According to FDM 11-15 Attachment 10.2, Warrant for Considering Passing Lanes, passing lanes are suitable for this segment based on traffic volumes and truck percentage.

The segment of US 12 between State Farm Road and Kenseth Way is proposed for a westbound passing lane. This is the most suitable location for a passing lane because motorists will have an opportunity to pass traffic platoons that might be created as they leave Cambridge. Relocating State Farm Road to the west would provide additional road length for a passing lane here. Although the Rodney Lane intersection and several driveways are within this segment, traffic volumes on these intersecting driveways and side roads are relatively low and they are located well away from the merge taper. An eastbound passing lane is not recommended for inclusion with a westbound passing lane on this segment due to the resulting creation of an undivided four-lane roadway and the presence of driveways and a side road near the east end of the segment where the merge taper would be placed.

Traffic operations analysis was conducted using HCS software. HCS analysis showed that neither the overall level of service nor the percent time spent following (PTSF) changed with the added westbound passing lane. Although the quantitative LOS as measured by PTSF and average travel speed did not change, a passing lane could improve safety by providing drivers an opportunity to pass using a designated lane instead of driving on the opposing lane.

There is no location west of Cambridge where an eastbound passing lane is recommended. Four eastbound passing lane locations were considered, but were deemed not suitable due to geometric and/or access safety concerns:

1) County BN to Deerfield Road—This segment is only one-mile long and too short for a sufficient passing lane and merge tapers.
2) Deerfield Road to County W/Oak Park Road—This segment is 1.2 miles long. The presence of Schuster's Playtime Farm poses a seasonal safety issue on this segment.

3) County W/Oak Park Road to WIS 73—This segment is 1.7 miles long. The presence of a horizontal curve greater than 3 degrees just east of Sunny Lane poses a safety concern.
4) State Farm Road and Kenseth Way—This segment is 1.5 miles long. An eastbound lane is not recommended here if a westbound passing lane is constructed on this segment; the collocation of two passing lanes would create a four-lane undivided high-speed roadway. Also, there are several driveways and a side road located near the east end of the segment where the merge taper would be located. The speed limit reduction at Kenseth Way approaching Cambridge would reduce the benefit of the passing lane and could also create an unsafe sudden speed transition for eastbound vehicles.

Rumble Strips

WisDOT could evaluate the US 12 corridor for rumble strip installation to improve safety conditions. Rumble strips are designed to alert drivers when vehicles deviate from the travel lane onto the shoulder or the centerline. For undivided rural highways, rumble strips could alert drivers before they run off the roadway or pass over the centerline into oncoming traffic. WisDOT's policy concerning rumble strips is located in FDM procedure 11-15-1.5. WisDOT has a systemic approach to including rumble strips to reduce crashes and increase safety on divided and undivided state highways in improvement projects and retrofit projects. WisDOT also specifies guidelines for installing rumble strips on concrete and asphaltic roadway surfaces to ensure long roadway life.

1.2 Intersections

The US 12 study corridor contains 38 rural intersections, eleven urban intersections, and two interchanges. Existing and future safety and operations conditions vary at all the intersections throughout the corridor (see traffic and operations section). Conceptual-level improvement strategies were developed for many of the 38 rural intersections along the corridor to address existing deficiencies and potential operations related issues. The intersections of US 12 with US 18 and WIS 134 within Cambridge are the only urban intersections that were analyzed. If an intersection is not listed in the following sections and is not within the Cambridge, it currently operates adequately and is anticipated to operate adequately through 2040 based on anticipated future traffic.

Through field review and further analysis of geometric conditions, it has been determined safety and operations of the corridor would improve with the addition of left-turn lanes and tee intersection bypass lanes. Each of the 38 rural intersections were analyzed for left-turn lane warrants in accordance with FDM Chapter 11-25-5 and tee intersection bypass lanes in accordance with FDM Chapter 11-25-1. Intersections that meet left-turn lane warrants and would benefit from a tee intersection bypass lane are identified in table 43 on the next page. The table also identifies intersections that do not necessarily meet left-turn lane warrants or requirements for a tee intersection bypass lane in accordance with the FDM, but may still be candidates based on geometric and/or driver expectation factors.

The Highway Safety Manual (HSM) identifies human information processing limitations as a cause of crashes along highway corridors. The HSM also identifies driver expectation as a mitigation measure for human information processing limitations. Driver expectation assumes consistent roadway design; the driver makes assumptions concerning the design of approaching roadway, intersections or interchanges based on previous experience along the highway.

Table 43 Intersection design and left-turn lane warrants

Intersection	2010 AADT	2040 AADT	Recommended Intersection Type[1]	Left-turn lane general warrant	Left-turn lane specific warrant	Left-turn lane based on geometrics
North Star Road	200		B1			
County BN/Nora Road	500/400	600/500	B1	no/no	no/yes	yes
Deerfield Road	500		B1	yes	no/no	no
Thorstad Lane	<50		B1*	no	no	no
John Deere Lane	<50		B1*	no	no	no
County W/Oak Park Road	550/2200	680/2700	B1	yes/yes	yes/yes	no
Sunny Lane	<50		B1*	no	no	no
Nuland Road	<50		B1*	no	no	no
WIS 73 (north leg)	4500	5600	A2*	yes	yes	no
Mikkelson Farm Road	<50		B1*	no	no	no
WIS 73 (south leg)	2000	2500	A2*	yes	yes	no
Fadness Road	100		B1*	no	no	no
Clear View Road	200		B1	no	no	no
State Farm Road	400		B1*	yes	no	no
Rodney Lane	<50		B1*	no	no	no
Kenseth Way	100		B1*	no	no	no
Park Road	100		A2	no	no	yes
Sleepy Hollow Road	100		B1*	no	no	no
Porter Drive	100		B1*	no	no	no
Cedar Road	200		B1*	no	no	no
Marina Lane	100		B1*	no	no	no
Majestic Circle	<50		B1*	no	no	no
Island Lane	200		B1*	no	no	no
Airport Road	200		B1*	no	no	no
Meadow Drive	<50		B1*	no	no	no
County A (North)	800		B1*	yes	yes	yes
Brosig Lane	<20		B1*	no	no	no
County A (South)	400		B1	yes	no	no
Oakland Road	500		B1	yes	no	no
Oestreich Lane	300		B1	no	no	no
Trieloff Road	200		B1*	no	no	no
Ehrke Lane	200		B1*	no	no	no
County J	270/191	347/247	B1	no	no/no	yes
County G	930	1150	A2	yes	yes	yes
Radloff Lane	100		B1*	no	no	no
County C/Hoard Road	1140/265	1450/340	A2	yes/no	yes/no	no

Highlights indicate areas with speed limit below 55 mph

[1] Indicates intersection type based on FDM section 11-25 and geometric analysis

*Indicates addition of a tee intersection bypass lane should be considered based on 60 mph design speed

County N/US 12 Off-ramps

Both off-ramp intersections at County N operate at acceptable levels of service (LOS B); signal risk assessments indicate that traffic thresholds for warrant analysis are not met for either intersection. Of the two intersections, the County N intersection with the US 12 eastbound off-ramp could have greater safety issues due to a higher crash rate (0.52 per million entering vehicles). Out of the seven crashes occurring at the intersection during the study period, five involved vehicles turning left from the ramp colliding with northbound or southbound vehicles on County N; one crash resulted in a Type A injury (defined as injuries requiring transport to a hospital). One crash at the westbound off-ramp resulted from a left-turning vehicle. Based on information in the crash reports, it is possible that drivers emerging from the off-ramps are having difficulty seeing approaching vehicles on County N, possibly due to hills on County N.

Improvements to intersection geometry could increase the sight distance for drivers on the off-ramps while warning signs on County N and the ramps could alert drivers. However, squaring the intersections could make turns more difficult for trucks. Signalization could offer the best option to improve safety at both intersections.

The US 12/County N interchange is the eastern termini in a study examining the potential conversion of US 12 to freeway standards between the I-39 and County N interchanges. The study was initiated in early summer 2012 and may include additional recommendations for the interchange. This interchange is also included as part of a project along I-39 due to its proximity to the I-39/US 12 interchange. Proposed improvements to that interchange could influence future decisions related to US 12/County N.

County BN/Nora Road

The intersection of US 12 at County BN/Nora Road currently operates at LOS F during the PM peak hour and has a crash history that could reflect both driver error and design deficiencies. A signal risk assessment indicated that warrants would likely not be met for adding signals to the intersection.

No crashes occurred during the study period involving vehicles turning from County BN/Nora Road onto US 12. The majority of crashes do not appear to be intersection-related, but involve vehicles on US 12 crossing the centerline or overtaking vehicles on the right. In 2011, a fatal crash occurred near this intersection involving an eastbound vehicle crossing the centerline and striking a westbound vehicle; this crash occurred during the day when conditions were clear and dry.

The intersection has two inadequate vision triangles; in the southwest and northeast corners, residential houses are located within the vision triangles. Recommendations to improve safety and function at the County BN/Nora Road intersection include a shift of the existing intersection approximately thirty feet north, which would require acquiring the residence in the northeast corner of the intersection. In addition, right and left-turn lanes should be added to improve safety, vision triangles, and conform to the design features of the corridor as a whole. By shifting the intersection to the north, the vision corner in the southwest corner is moved away from the house. A benefit-cost analysis should be carried out to determine the best alternative — shifting the alignment or acquiring both homes. Additional lower-cost safety improvements at the intersection could include

lighting the intersection, improving pavement markings, and adding advance signage to warn approaching vehicles of the intersection. Figure 20 below shows a concept of what the intersection could look like with the above described improvements.

Figure 20 Proposed intersection improvements at County BN/Nora Road

County W/Oak Park Road

The US 12 intersection at County W/Oak Park Road experiences safety and operational issues. The intersection's worst approach currently operates at LOS F in the AM and PM peak periods. A signal risk assessment indicated that traffic volume thresholds are currently met for Case 2 (See Section 4.3). Although the intersection's crash rate during the study period was not high (0.36 per million entering vehicles), a large share of all crashes involved two eastbound vehicles (five of eight crashes), which likely involved eastbound vehicles waiting to turn left onto Oak Park Road.

The addition of turn lanes at this intersection could reduce crash incidence and improve operations. Constructing eastbound and westbound channelized left-turn lanes could reduce rear-end crashes on US 12. Figure 21 illustrates the intersection with channelized left-turn lanes.

Installing traffic signals should be investigated for this intersection. However, improvements to the WIS 73 intersections to the east may reduce some of the volume at this intersection or create additional gaps, making signals unnecessary.

Figure 21 Proposed improvements at County W/Oak Park Road

WIS 73 North and South

Improvements to the US 12/WIS 73 intersections are part of the I-39/90 Expansion Project and have been omitted from review in this study report. The WIS 73/US 12/18 Intersection Reconstruction Project (EA) is currently underway analyzing alternatives for improvements to both US 12/WIS 73 intersections. At the time this study document was prepared, a preferred alternative had been approved that would grade-separate the two highways as illustrated in figure 22 below. US 12 will pass over WIS 73 via a new embankment and structure, while WIS 73 will pass beneath US 12 on a new unified alignment. WIS 73 traffic headed east or westbound on US 12 will access US 12 via new eastbound and westbound jug-handle intersections. All other existing accesses to US 12 (public and private) in the vicinity of WIS 73 would be moved to WIS 73.

Figure 22 Preferred alternative for the US 12/WIS 73 intersection

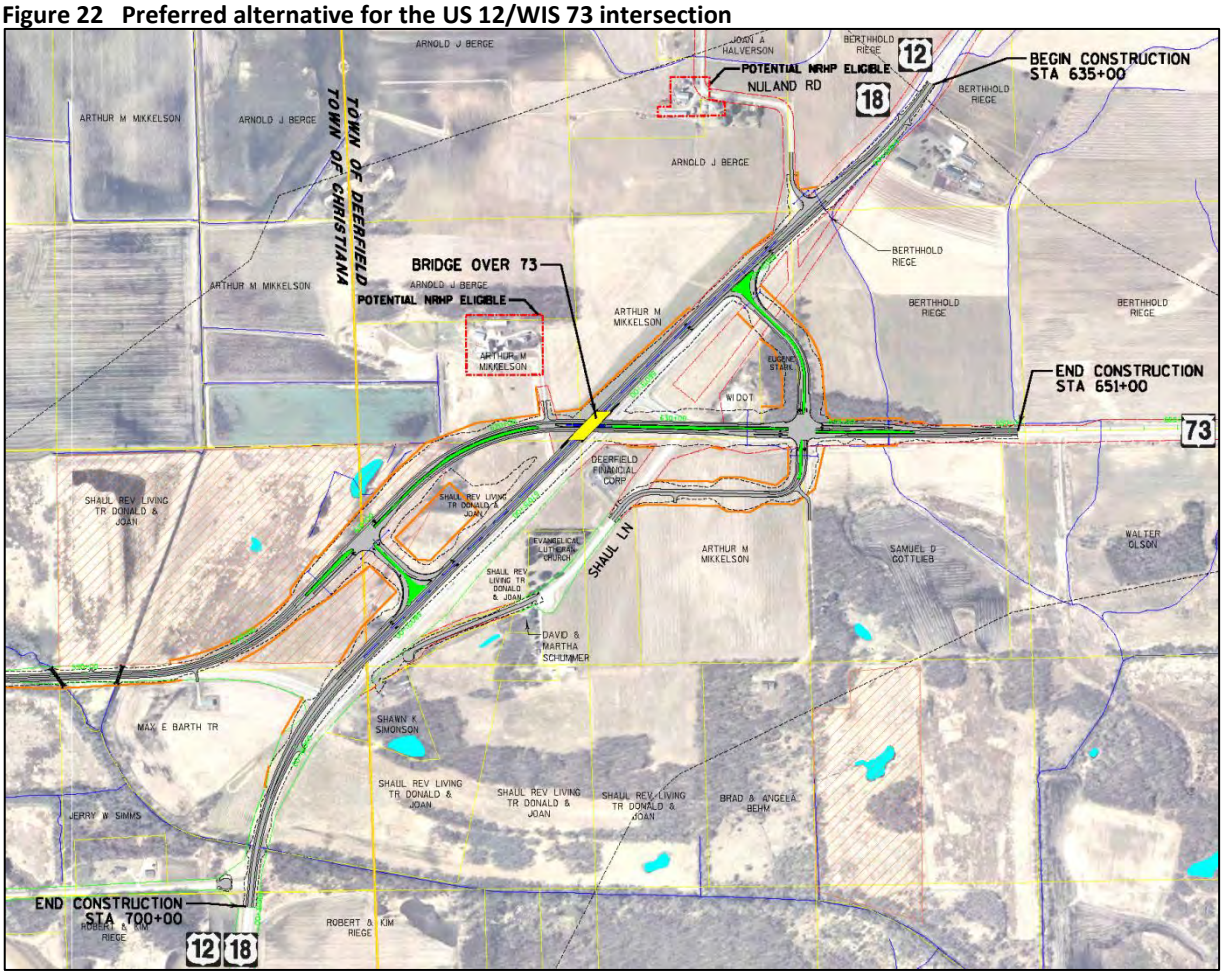

Clearview Road and State Farm Road Intersections

Through local knowledge and public involvement, the intersection of State Farm Road has been identified as a heavily traveled route for those who commute to Madison or Deerfield and live in the hamlet of London. However, the Clearview Road intersection is located less than the 2,000 foot recommended spacing distance to State Farm Road as identified in FDM Chapter 11-5 Attachment 5.1. In addition, State Farm Road has an intersection angle that is undesirable (approximately 65

degrees) according to FDM Chapter 11-25. A desirable intersection angle is defined as between 70 and 110 degrees with the ideal intersection angle being 90 degrees. State Farm Road also has an embankment that obstructs the vision triangle in the northwest corner of the US 12 intersection, impeding driver views to the west. Long-term recommendations for the intersections of Clearview Road and State Farm Road would combine the two intersections into one, thus correcting undesirable intersection angle and insufficient intersection spacing. Figure 23 below shows a concept of how this could be implemented. In the example, State Farm Road would be converted to a cul-de-sac maintaining access to the existing manufactured housing community. Clearview Road would then be extended from its present location north, then curve to the east to connect to the existing State Farm Road at the bus yard and juvenile detention facility. The newly proposed intersection would be constructed with both designated right and left-turn lanes.

Figure 23 Proposed improvements at Clearview and State Farm roads

WIS 134

The US 12/WIS 134 intersection currently operates at LOS E in the PM peak hour due to difficulties that drivers of southbound vehicles have turning left onto eastbound US 12. The PM peak-hour level of service falls to LOS F by 2020.

There are no apparent safety issues at this intersection other than a vision triangle obstruction in the northwest corner, where an embankment obstructs the view of US 12 traffic from WIS 134. Traffic volumes are currently not high enough to warrant signalization of the intersection. Because of its proximity to the US 12/18 intersection, improvement strategies for the US 12/WIS 134 intersection are dependent upon recommendations for the US 12/18 intersection located approximately 0.10-mile east. Signalization of the US 12/18 intersection could improve operations at WIS 134 by providing gaps in US 12 traffic. Exhibit 10 on page 111 contains three different geometric recommendations for the US 12 intersections with both WIS 134 and US 18.

US 18

The US 12/18 intersection is operating at low levels of service and has some safety issues. The intersection currently operates at LOS F during the PM peak hour and LOS C in the AM peak hour. Morning peak-hour operations fall to LOS D by 2030 and LOS F by 2040. The signal assessment indicated that thresholds are currently met for both Case 1 and 2 (See Section 4.3).

The intersection did not experience a high crash rate during the study period (0.60 per million entering vehicles). Five of fourteen crashes at the intersection during the study period were rear ends that involved US 18 westbound vehicles turning right onto US 12; a sixth crash involved a westbound vehicle on US 18 striking a westbound vehicle on US 12 as it was merging.

Signalization of the US 12/18 intersection could be investigated further. Signals, if warranted, could improve intersection operations, possibly reduce right-turn crashes, and improve comfort and safety for pedestrians crossing US 18. Signals could also reduce vehicle speeds as they enter Cambridge from the west.

Exhibit 10 on page 113 contains three different improvement recommendations for the WIS 134 and US 18 intersections. The two intersections are within approximately 800 feet of each other; therefore, a geometric change at either intersection could affect the other. The three alternatives discussed are conceptual, but they do consider historical oversize/overweight (OSOW) vehicle information.

Alternative A, which can be seen in exhibit 10, is similar to the existing conditions in the US 12/18 intersection area. This alternative would add a traffic signal to the intersection. The US 18 intersection area would be modified to incorporate an eastbound channelized left-turn lane and two eastbound through lanes. A designated right-turn lane and a single through lane would be added to the westbound direction. Westbound US 18 would be modified to include a left-turn lane and a designated right-turn lane which would then transition into a merge/auxiliary lane along US 12. The merge/auxiliary lane continues through to the WIS 134 intersection where it functions as a right-turn lane. In the WIS 134 intersection area, a channelized left-turn lane would be added to

eastbound US 12. US 12 would begin to taper into two eastbound through lanes approximately 200 feet west of WIS 134. Pedestrian accommodations would also be improved at the US 12/18 intersection.

Alternative B, which can be seen on exhibit 10, proposes a three-leg roundabout at the US 12/18 intersection. This concept would re-align US 12 from approximately 800 feet east of WIS 134 through the US 18 intersection. The corridor mainline would be shifted north, which would allow adequate space for the roundabout at US 18. The WIS 134 intersection would be reconstructed with designated right and left-turn lanes along with a tee intersection bypass lane in the eastbound direction. The roundabout would allow for improved function of the WIS 134 intersection during both the AM and PM peak hour. Traffic traveling westbound in the PM peak would slowly accelerate while exiting roundabout, while during the PM peak traffic would be slowing as they approach the roundabout. Pedestrian accommodations would be added to the US 12/18 intersection area with sidewalks on all sides of the roundabout. Complementing the sidewalks would be two crosswalks, one crossing US 18 and the other crossing US 12 on the side closest to Cambridge.

Alternative C is a second roundabout alternative. This alternative consists of creating a four-leg roundabout in the current US 12/18 intersection location. As can be seen in exhibit 10, US 12 would be relocated to a new alignment, across from the existing US 18 intersection. A portion of WIS 134 would be closed and relocated to an old alignment, which currently ends in a cul-de-sac at US 12. Pedestrian accommodations would be installed on all four legs.

Alternative A

Alternative B

Alternative C

Exhibit 10

US 12/18 Intersection Alternatives

US 12 Corridor Study

1 In = 300 Ft

TranSmart

County A

The US 12/County A intersection is located just east of Cambridge. Currently the intersection is not experiencing operations or safety-related issues. As traffic volumes increase, the addition of an eastbound left-turn lane or tee intersection bypass lane and a westbound right-turn lane may be desirable. These additions would improve traffic flow, improve safety and complement the continuity of the corridor. An intersection concept can be found in figure 24 below.

Figure 24 Proposed improvements at County A

County J

The US 12/County J intersection currently operates at LOS C. The intersection level of service is not expected to change in the next 30 years. Therefore, intersection recommendations are focused on improving safety and providing continuity along the US 12 mainline. During the five-year study period no crashes were reported in the County J intersection area. The US 12/County J intersection is less than a 90 degree angle. However the angle is within the 70 to 110 degree range which is acceptable according to WisDOT FDM 11-25. Because of this, designated right and left-turn lanes on US 12 could be considered, as shown in figure 25.

Figure 25 Proposed improvements at County J

County G

The US 12/County G three-leg intersection currently operates at LOS B, and over the thirty year forecast period intersection LOS is anticipated to decline to LOS C. Traffic volumes are projected to increase on County G to 1,150 AADT by 2040, thus meeting warrants for a designated left-turn lane. A designated right-turn lane on westbound US 12 at County G could be considered as well. Figure 26 illustrates an intersection concept.

Figure 26 Proposed improvements at County G

County C/Hoard Road

The US 12/County C/Hoard Road intersection currently experiences LOS C and the worst level of service forecast for 2040 is LOS D in the PM peak hour. This level of service analysis is based on existing conditions and does not take into account possible future development. The land use for properties between County C/Hoard Road and WIS 26 is designated in the *City of Fort Atkinson Comprehensive Plan* as Planned Mixed Use development. In addition, there are two vision triangle obstructions within the intersection area. In the northwest corner an embankment is within the vision triangle, while in the southwest corner a building is in the vision triangle. WisDOT FDM Chapter 11-5 identifies desired access spacing from an interchange ramp as 1,320 feet. If this area develops as planned, a service road system would be desirable connecting County C/Hoard Road to the new development. Without a service road system, new development and associated vehicles would rely solely on direct access to US 12, competing with the regional function of the corridor. As can be seen on figure 27 below, recommendations for this intersection consist of the addition of designated right and left-turn lanes in each direction.

Figure 27 Proposed improvements at County C/Hoard Road

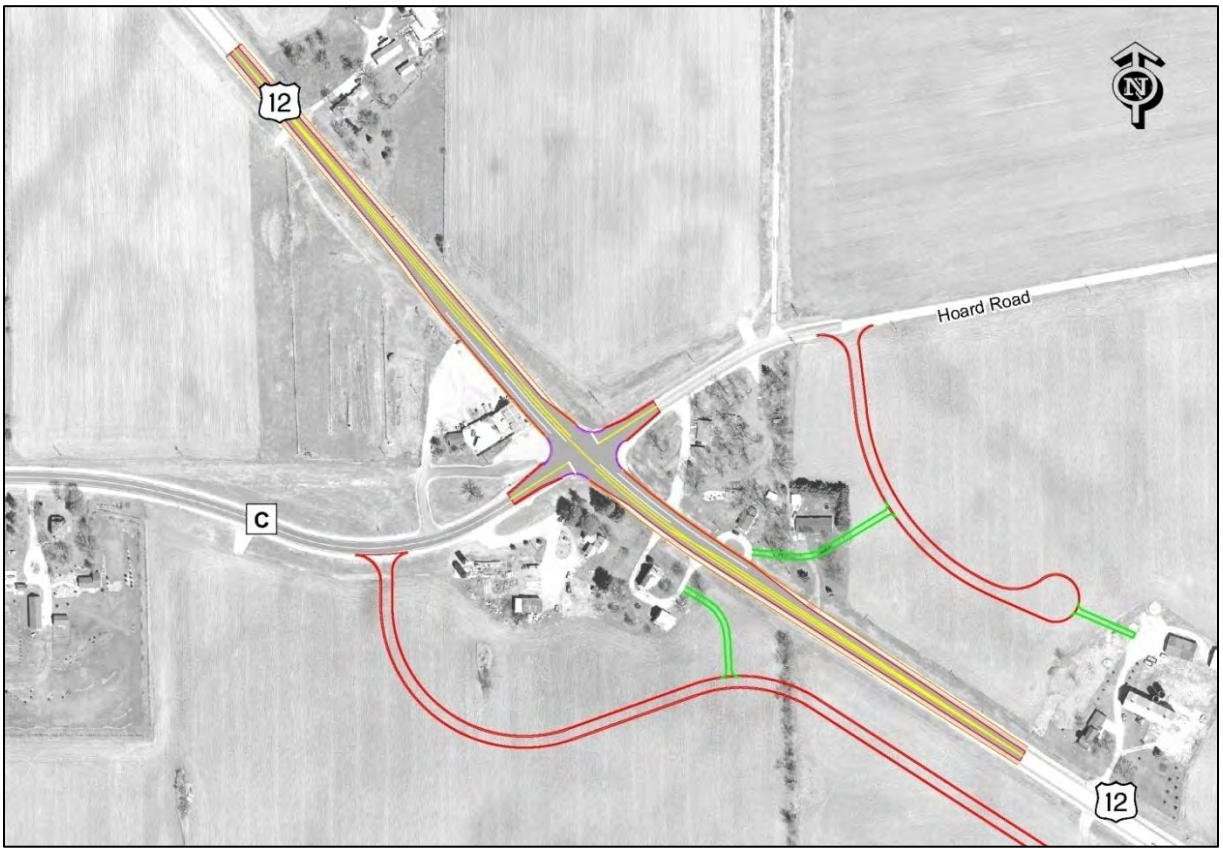

2.0 Access Management Inventory and Plan

Access Management Background

WisDOT defines access management as "the process of planning and maintaining the appropriate access spacing, access-point design, and the total number of access points to a highway system". WisDOT's and other agencies' experiences across the country have demonstrated that the benefits of access management are substantial and cost effective in the majority of situations. WisDOT's access management goals include:

- Protecting the public investment in highway facilities
- Protecting the function of state highways
- Preserving safety
- Preserving capacity and efficiency
- Promoting orderly development of adjacent properties
- Minimizing long-term adverse impacts of future improvements
- Minimizing maintenance costs
- Delaying or eliminating the need to expand or relocate a facility
- Permitting the expansion of two-lane facilities to four-lane facilities on existing locations, eliminating the need to completely relocate the facility (this study does not include capacity expansion initiatives)

In order to achieve its goals, WisDOT recognizes a balance must be sought between the interests of highway users and property owners, public investments in highway improvement and maintenance, and desirable land development. This balance requires that access reasonably and suitably accommodates landowners' use of their property. Because of this, the intent of access management is not to limit, restrict, or otherwise reduce access below a point that is necessary and adaptable to serve the needs of landowners.

WisDOT employs a number of tools across the state to manage access on state highways. These tools include:

- Statutory control of highway access (Wis. Stat. 84.25)
- Purchase of access rights (Wis. Stat. 84.09)
- Driveway permitting (Wis. Stat. 86.073)
- Access covenants
- Land use/access management plans
- Traffic impact analysis (TIA)
- Joint access easement agreements
- Official mapping and freeway or expressway designation (Wis. Stat. 84.295 and local statutes)
- Early review of local rezoning and/or site plan development
- Input into local zoning ordinances and land use plans that affect state highways
- Subdivision plat review (§ Chapter 236)
- Access spacing and design guidelines
- Interchange and frontage road spacing and design guidelines

Some of these tools are already in place on portions of US 12 within the study area. Previous sections of this report have focused on the effects of local comprehensive plans and coordination activities with federal, state, and local jurisdictions with a stake in US 12. In addition, an Access Control Map (previously discussed) is currently in place for portions of the corridor. The map documents existing access and follows the requirements found under Wisconsin state statute § 84.25. Access on portions of the western half of the project corridor, between County N and WIS 134, have been purchased by WisDOT under state statute § 84.09. US 12 access between Park Road in Cambridge and approximately 1,500 feet east of WIS 26 is mapped and controlled under Wisconsin state statute § 84.25.

The focus of this section of the report is the development of an Access Management Plan for the US 12 corridor. Access management plans have been increasingly used across Wisconsin by state and local governments in order to create a long-term vision that preserves the safe and efficient operations of the highway system. The relationship between local land use decisions and the use and efficiency of transportation systems is widely recognized. Land use is changing to higher intensity uses in many places along the US 12 corridor at the same time that corridor traffic is growing. Higher intensity uses combined with greater traffic volumes generally leads to increased congestion, reduced highway function, and higher crash rates. It is important to note that Jefferson County is actively managing growth through planning and exclusive agriculture zoning.

The goal of an access management plan is to develop long-term strategies that, when implemented, function well together as a system and delay the need for costly capacity expansion projects. An access management plan is a proactive tool to address anticipated safety, operational, and congestion issues that are expected to arise as traffic volumes grow and land uses intensify.

An access management plan can be undertaken by WisDOT as a singular or cooperative effort, and is most successful when local units of government support the plan through resolution. This study has included extensive public and agency involvement, but does not require support via resolution. This plan is intended to be useful in land use and access decisions that fall under the jurisdiction of local units of government, as well as meet WisDOT's regional mobility goals for US 12.

In addition to existing and future land use considerations, the access management plan encourages relocation of as much direct access as possible to well-spaced public road connections. This is achieved through identifying opportunities to:

- Consolidate private driveways in order to reduce the number of access points
- Relocate private driveways to local road connections, where possible
- Develop a plan for well-spaced public road connections, where possible
- Provide local road connectivity to separate traffic having local and regional destinations

It is important to note that an access management plan represents a long-term vision that is often tied to land development or parcel consolidation. Many of the concepts identified in the plan would not be implemented without property owner consent (unless safety warrants action) or until such time as land use changes to a more intense use. For instance, residential and field driveways in general do not influence highway function to a degree that a commercial driveway generating

several trips a day would. Residential and field entrances would be the lowest priority for consolidation or relocation unless WisDOT comes to an agreement with property owners.

The plan was also developed using WisDOT recommended guidelines for access spacing along a state highway. WisDOT FDM Procedure 11-5-5, Access Control, establishes spacing and design guidelines for intersecting highway and local road access points including private driveway connections. Table 44 indicates the minimum recommended spacing between access points along arterials, as found in FDM Procedure 11-5-5, Attachment 5.1.

Because US 12 is a principal arterial, WisDOT recommends generous spacing between access points in order to preserve its function as an important regional highway. US 12 has average daily traffic (ADT) well above 5,000 vehicles, therefore minor arterials intersecting it should be spaced at least two miles apart, while major collectors should be one mile apart, minor collectors and local roads 2,000 feet, and private roads and driveways separated by 1,000 feet.

Table 44 WisDOT access spacing guidelines for a principal arterial

Intersecting roadway		Spacing between roadways
Type	**Design year ADT**	
Minor arterial	**>5,000**	2 miles
	3,000 – 5,000	1 mile
	<3,000	1 mile
Major collector		1 mile
Minor collector		2,000 feet
Local		2,000 feet
Private	**>100**	1,000 feet
	<100	1,000 feet

Reducing the number of direct access points on a roadway allows more efficient use and promotes greater intersection separation. Operational problems caused by numerous private driveways and intersections can often be resolved using two techniques: relocating private driveways to local streets and promoting shared driveways/cross-access among properties along the highway. Driveways could be relocated and/or promoted in future developments for placement on local roads. Figure 28 on the next page indicates WisDOT access spacing guidelines for rural or urban crossroads near expressway or freeway ramps (from FDM 11-5-5, Attachment 5.2).

Figure 28 WisDOT access control guidelines for expressways and freeways

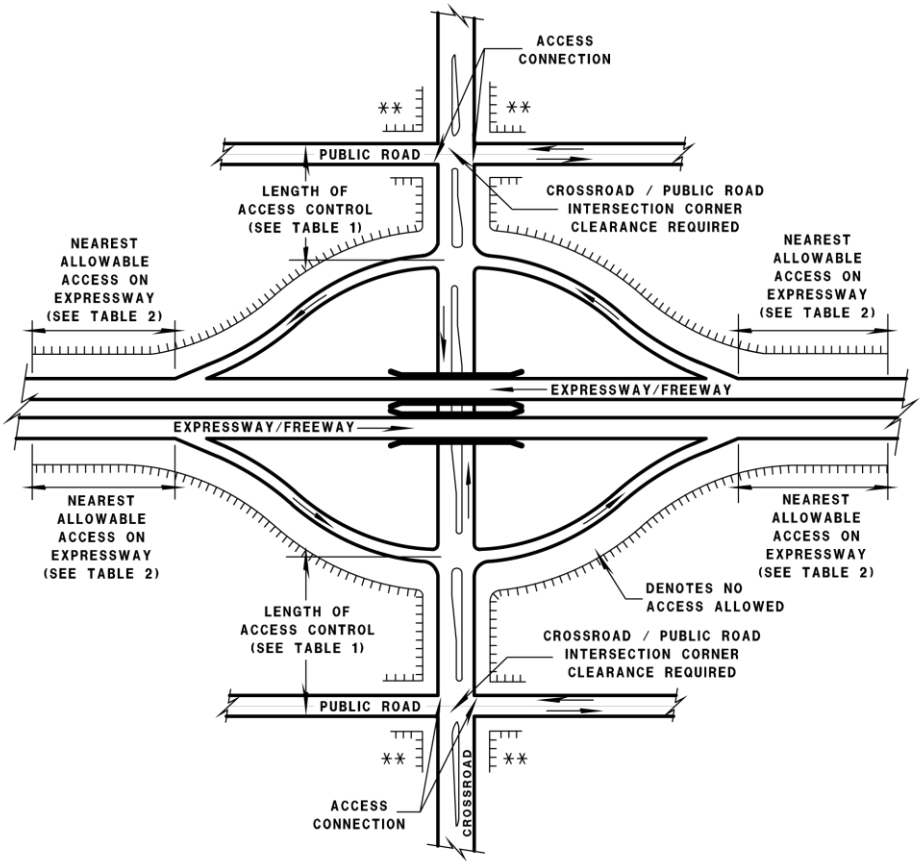

TABLE 1 - Distance of Access Control on Crossroad

Area Type	Desirable	*Minimum
Rural or Urban	1,320 ft	1,000 ft

TABLE 2 - Distance of Access Control on Expressways

Area Type	Median opening at at-grade intersection	Desirable	*Minimum
Rural or Urban	**None** (intersection is right-in and/or right-out)	2,640 ft	1,500 ft
	Full or restricted (allows left-in, and/or left-out, and/or thru movements	2,640 ft	2,640 ft

* An approved traffic impact analysis is required to justify a less than desirable distance of access control. See text.

**Access control here is based on the functional area of the intersection. See

2.1 Access Inventory and Analysis

All public roadways and private access points were inventoried as the initial step in creating an access management plan for the US 12 corridor. Table 46 on page 124 provides a compilation of data for all access points along the corridor; a more detailed inventory is included in the report, "US 12 Rural Intersection and Private Access Spacing," which can be found in Appendix F.

Distances between intersecting roadways on the US 12 corridor were measured in order to detect spacing deficiencies. The distances between roadway intersections on US 12 in rural areas were then evaluated by WisDOT guidelines per FDM 11-5-5 Attachment 5.1 (detailed in table 44) according to their functional classes: arterials, connectors, and local roads.

Two highways were determined to have spacing that falls below WisDOT recommendations: WIS 73 and CTH C/Hoard Road. Both legs of WIS 73 are designated as minor arterials; the north leg traffic volume is above 5,000 AADT while the south leg's volume is below 5,000 AADT. The recommended spacing between them is one mile; however, the actual spacing is approximately 2,500 feet. County C/Hoard Road is designated as a major collector. It is located about 3,400 feet from the WIS 26 ramps, which is less than the recommended spacing of one mile.

Local road spacing along US 12 was also analyzed. Twenty-six public roads intersect US 12 between County N and WIS 26 in rural areas, while 24 streets and roads intersect US 12 in the Cambridge urbanized area. Recommended spacing between rural local roads on a principal arterial is 2,000 feet. Several local roads along US 12 in the rural areas do not meet WisDOT's recommended spacing of 2,000 feet; most of these roads have extremely low traffic volumes (less than 200 AADT). It should be noted that several of the intersecting roads with low traffic volumes access fewer than five private properties; some access only one property.

The US 12 corridor has 210 private access points. The access inventory provided in table 46 includes all private access points along the US 12 corridor and their spacing from public roads. Exhibit 11 provides a graphical inventory of all existing access locations on the corridor; access locations identified on the map sheets do not necessarily portray permitted driveway uses. Access numbering included in table 46 corresponds to access numbering in exhibit 11. The spacing distance from each private access to the nearest public road to the east and west was measured and evaluated against the driveway spacing guideline of 1,000 feet. Per FDM 11-5-5 Attachment 5.1 (see table 44), minimum recommended spacing between private roads and other roads is 1,000 feet. Very few of the corridor's access points meet WisDOT's spacing standards. Of greatest concern is the clustering of private access points together or near public road intersections in locations where vehicle speeds on US 12 are higher (55 mph posted speed limit) and/or visibility is poor. Examples include driveways near the US 12 intersections with Oakland Road and County C/Hoard Road.

Table 46 on page 124 provides an inventory of all public and private access points on the US 12 study corridor, spacing distance to the nearest public roads, and WisDOT minimum spacing standards for public road intersections and private access points. These standards concern spacing between public road intersections by classification (FDM 11-5-5 Attachment 5.1, Access Spacing Guidelines), between private driveways and public roads (FDM 11-25-1.2.2, Corner Clearance, and

FDM 11-10-5 Figure 1, Sight Distance Criteria), and between private driveways (FDM 11-5-5 Attachment 5.1, Access Spacing Guidelines). Table 45 summarizes spacing standards for private driveways on principal arterials in urban and rural areas. Spacing distances for each access have been analyzed against WisDOT standards, and recommendations are provided for access points that do not meet standards. Existing state statutory and purchased access controls have been taken into account. As a general recommendation, accesses on the rural portions of the US 12 corridor should be evaluated for removal or relocation to public roads if current land use changes.

The WisDOT §84.25 access map for the portion of the study area where §84.25 access controls are currently in place was reviewed by WisDOT staff. A total of six driveway locations were determined to not be permitted under the §84.25 access map; these locations are identified in table 46, access inventory and recommendations.

Table 45 Spacing standards for private driveways from public road intersections for principal arterial undivided state highways

	Design speed	Stopping sight distance	Minimum	Desirable
Urban			Greater of Stopping Sight Distance or functional length of intersection.	
	30	200		
	35	250		
	40	305		
	45	360		
Rural			1,000 feet	Greater of 1,000 feet, Stopping Sight Distance, or functional length of intersection.
	50	425		
	55	495		
	60	570		

Sources: Facility Development Manual (FDM) 11-5-5 Attachment 5.1, Access Spacing Guidelines; FDM 11-25-1.2.2, Corner Clearance; and FDM 11-10-5 Attachment 5.1, Sight Distance Values.

It should be noted that WisDOT does not have standards for spacing between public road intersections in urban areas. Although some sources have suggested a minimum spacing distance of 500 feet in urban areas, this figure is merely a suggestion that is not based on peer-reviewed safety studies. Stopping Sight Distance criteria (FDM 11-10-5, Attachment 5.1, Sight Distance Values) indicates that vehicles traveling 30 mph need 200 feet to stop safely, while the minimum distance to prevent collision due to right-turn conflict overlap at 30 mph is 100 feet (see Transportation Research Board Circular 456, "Driveway and Street Intersection Spacing," March 1996). To minimize collisions in urban areas between state highway mainline through traffic and left-turning vehicles emerging from driveways and public cross streets, WisDOT and local communities should use the stopping sight distances listed in table 45 as a guideline.

Table 46 Access inventory and recommendations

ID**	Access point	Side of US 12	Access type	Spacing to nearest public road to west (feet)	Spacing to nearest public road to east (feet)	Minimum spacing to nearest public road (feet)	Meets spacing standards to nearest public road	*Meets driveway spacing standard	Notes	Recommendation
PR1	County N	Both	Interchange	-	1,680	1 mile	Yes	-	Minor arterial	None
PR2	North Star Road	South	Full movement	1,680	10,510	2,000	No	-	Local road; less than 2000'	None
1	Private drive	North	Residential	1,290	9,210	1,000	Yes	Yes		Consolidate if use change
2	Field entrance	South	Agricultural	1,730	8,760	1,000	Yes	No		None
3	Private drive	North	Industrial	1,750	8,740	1,000	Yes	No		None
4	Private drive	North	Residential	2,610	7,900	1,000	Yes	No		Relocate if use changes
5	Private drive	North	Residential	3,850	6,680	1,000	Yes	No	Driveway spacing	Relocate if use changes
6	Private drive	South	Residential	4,180	6,320	1,000	Yes	No	Driveway spacing	Relocate if use changes
7	Private drive	North	Residential	4,530	5,980	1,000	Yes	No	Driveway spacing	Relocate if use changes
8	Private drive	South	Residential	5,400	5,110	1,000	Yes	No	Driveway spacing	Relocate if use changes
9	Private drive	North	Residential	5,550	4,970	1,000	Yes	No	Driveway spacing	Relocate if use changes
10	Private drive	North	Residential	6,010	4,510	1,000	Yes	No	Driveway spacing	Relocate if use changes
11	Field entrance	South	Agricultural	7,290	3,220	1,000	Yes	No	Driveway spacing	Relocate if use changes
12	Field entrance	North	Agricultural	7,500	3,000	1,000	Yes	No	Driveway spacing	None
13	Field entrance	South	Agricultural	7,500	3,000	1,000	Yes	No	Driveway spacing	None
14	Field entrance	North	Agricultural	8,010	2,520	1,000	Yes	No	Driveway spacing	Consider removal if feasible
15	Private drive	South	Residential	8,010	2,500	1,000	Yes	No	Driveway spacing	None
16	Private drive	North	Residential	8,910	1,600	1,000	Yes	No	Driveway spacing	None
17	Field entrance	North	Agricultural	9,530	1,000	1,000	Yes	No	Driveway spacing	Consider removal if feasible
18	Private drive	South	Residential	9,440	1,070	1,000	Yes	No	Driveway spacing	Consolidate accesses
19	Field entrance	South	Agricultural	9,530	970	1,000	No	No	Driveway spacing	Consolidate accesses
20	Private drive	North	Residential	9,950	570	1,000	No	No	Spacing to County BN/Nora	If use changes move to Nora Rd
PR3	County BN/Nora Rd	Both	Full movement	10,510	5,350	2,000	Yes	-	Local road	None
21	Private drive	South	Residential	620	4,730	1,000	No	No	Spacing to County BN/Nora	If use changes move to BN
22	Field entrance	North	Agricultural	810	4,500	1,000	No	No	Driveway spacing	None
23	Field entrance	South	Agricultural	840	4,500	1,000	No	No	Driveway spacing	None
24	Private drive	North	Residential	1,840	3,480	1,000	Yes	No		None
25	Field entrance	South	Agricultural	1,860	3,480	1,000	Yes	No		None
26	Private drive	South	Institutional	2,800	2,530	1,000	Yes	No		None
27	Private drive	North	Residential	3,800	1,530	1,000	Yes	No	Driveway spacing	None
28	Field entrance	South	Agricultural	3,800	1,530	1,000	Yes	No	Driveway spacing	None
29	Private drive	North	Residential	4,230	1,100	1,000	Yes	No	Driveway spacing	Realign across from 30
30	Private drive	South	Residential	4,300	1,030	1,000	Yes	No	Driveway spacing	Realign across from 29
PR4	Deerfield Road	Both	Full movement	5,350	2,570	2,000	Yes	-	Local road	None
31	Private drive	North	Residential	700	1,850	1,000	No	No		None

ID**	Access point	Side of US 12	Access type	Spacing to nearest public road to west (feet)	Spacing to nearest public road to east (feet)	Minimum spacing to nearest public road (feet))	Meets spacing standards to nearest public road	*Meets driveway spacing standard	Notes	Recommendation
32	Field entrance	South	Agricultural	690	1,850	1,000	No	No		None
33	Field entrance	North	Agricultural	1,260	1,310	1,000	Yes	No		Remove if feasible
34	Private drive	South	Commercial	1,260	1,310	1,000	Yes	No		None
PR5	Thorstad Lane	North	Full movement	2,570	1,840	2,000	No	-	Local road	None
PR6	John Deere Lane	South	Full movement	1,840	1,790	2,000	No	-	Local road	None
35	Private drive	North	Agricultural	260	1,500	1,000	Yes	Yes	Relocated 2013	None
PR7	County W/Oak Park Rd	Both	Full movement	1,790	2,140	1 mile	Yes	-	Major collector	None
36	Field entrance	North	Agricultural	2,110	20	1,000	No	No	Driveway spacing	None
PR8	Sunny Lane	South	Full movement	2,140	5,360	2,000	Yes	-	Local road	None
37	Private drive	North	Residential	170	5,170	1,000	No	No	Driveway spacing	Consider joint w/36 or 38
38	Private drive	North	Residential	375	4,970	1,000	No	No	Driveway spacing	Consider joint w/37
39	Private drive	South	Residential	380	4,950	1,000	No	No	Driveway spacing	None
40	Private drive	North	Residential	1,150	4,200	1,000	Yes	No	Driveway spacing	None
41	Field entrance	South	Agricultural	1,480	3,850	1,000	Yes	No	Driveway spacing	Consider realign from 40
42	Private drive	North	Residential	2,690	2,650	1,000	Yes	Yes		None
43	Field entrance	South	Agricultural	2,690	2,650	1,000	Yes	Yes		None
44	Private drive	North	Residential	4,540	790	1,000	No	No	Spacing to Nuland	Part of I-39/90 N/S Project
45	Field entrance	South	Agricultural	4,560	770	1,000	No	No	Spacing to Nuland	Part of I-39/90 N/S Project
PR9	Nuland Road	South	Full movement	5,360	1,390	2,000	No	-	Local road	Part of I-39/90 N/S Project
PR10	WIS 73 North	North	Full movement	1,390	580	2 miles	No	-	Minor arterial	Part of I-39/90 N/S Project
PR11	Mikkelson Road	South	Full movement	580	1,870	2,000	No	-	Local road	Part of I-39/90 N/S Project
46	Private drive	North	Residential	1,670	200	1,000	No	No		Part of I-39/90 N/S Project
PR12	WIS 73 South	South	Full movement	1,870	1,130	1 mile	No	-	Minor arterial	Part of I-39/90 N/S Project
47	Field entrance	North	Agricultural	290	820	1,000	No	No		Part of I-39/90 N/S Project
PR13	Fadness Road	South	Full movement	1,130	2,660	2,000	No	-	Local road	Part of I-39/90 N/S Project
48	Private drive	North	Residential	1,330	1,300	1,000	Yes	No	Driveway spacing	Consider joint w/50
49	Field entrance	South	Agricultural	1,330	1,300	1,000	Yes	No	Driveway spacing	None
50	Private drive	North	Residential	1,900	740	1,000	No	No	Spacing to Clearview Rd	Consider joint w/48
PR14	Clearview Road	South	Full movement	2,660	450	2,000	No	-	Local road	Cons. realign to State Farm
PR15	State Farm Road	North	Full movement	450	6,860	2,000	No	-	Local road	Cons. realign to Clearview
52	Field entrance	North	Agricultural	3,450	3,390	1,000	Yes	No	Driveway spacing	None
53	Field entrance	South	Agricultural	3,460	3,380	1,000	Yes	No	Driveway spacing	None
54	Private drive	North	Residential	4,410	2,420	1,000	Yes	No	Driveway spacing	Cons. realign w/55
55	Private drive	South	Residential	4,530	2,290	1,000	Yes	No	Driveway spacing	Cons. realign w/54
56	Private drive	North	Commercial	5,640	1,180	1,000	Yes	No	Driveway spacing	Consolidate

ID**	Access point	Side of US 12	Access type	Spacing to nearest public road to west (feet)	Spacing to nearest public road to east (feet)	Minimum spacing to nearest public road (feet)	Meets spacing standards to nearest public road	*Meets driveway spacing standard	Notes	Recommendation
57	Private drive	North	Commercial	6,050	780	1,000	No	No	Not on access control	Consolidate
PR16	Rodney Lane	South	Full movement	6,860	1,280	2,000	No	-	Local road	None
PR17	Kenseth Way	North	Full movement	1,280	1,300	2,000	No	-	Local road	None
PR18	WIS 134	North	Full movement	1,300	520	1 mile	No	-	Major collector	Evaluate w/US 18
60	Private drive	South	Commercial	290	130	1,000	No	No	Spacing to US 18	Consolidate
PR19	US 18	North	Full movement	520	530	-	-	-	Minor arterial	Evaluate w/WIS 134
61	Private drive	South	Commercial	50	435	200	No	-	Spacing to US 18	Consider consolidation
62	Private drive	South	Commercial	170	340	200	No	-	Spacing to US 18	Consider consolidation
63	Private drive	South	Commercial	250	260	200	Yes	-	Driveway spacing	Consider consolidation
64	Private drive	North	Commercial	300	200	200	Yes	-		Consider consolidation
65	Private drive	South	Residential	410	120	200	No	-	Driveway spacing	Consider consolidation
PR20	Pinecrest Drive	North	Full movement	530	390	-	-	-	Local road	None
PR21	Madison Street	Both	Full movement	390	740	-	-	-	Local road	None
66	Private drive	South	Commercial	30	670	200	No	-	Distance to Madison St	Consider cross access
67	Private drive	South	Commercial	200	490	200	Yes	-		Consider cross access
68	Private drive	South	Commercial	290	410	200	Yes	-	Cross access available	Consider cross access
69	Private drive	North	Residential	300	390	200	Yes	-	On curve	None
70	Fire station	South	Institutional	565	120	200	No	-	Driveway spacing	None
PR22	Pleasant Street	Both	Full movement	740	590	-	-	-	Local road	None
71	Private drive	North	Commercial	170	385	200	No	-	Driveway spacing	None
72	Private drive	South	Commercial	200	350	200	Yes	-		None
73	Private drive	South	Commercial	400	160	200	No	-	Driveway spacing	None
74	Private drive	North	Commercial	410	130	200	No	-	Driveway spacing	Remove access
75	Private drive	South	Commercial	490	85	200	No	-	Distance to County PQ	Remove access
PR23	County PQ/Water St	South	Full movement	590	100	-	-	-	Local road	None
PR24	Mill Street	North	Full movement	100	390	-	-	-	Local road	None
PR25	County B/Spring St	Both	Full movement	390	100	-	-	-	Major collector	None
PR26	Park Street	North	One-way	100	290	-	-	-	Local road	None
76	Private drive	South	Commercial	5	270	200	No	-	Driveway spacing	None
77	Private drive	South	Residential	80	195	200	No	-	Driveway spacing	None
78	Private drive	North	Residential	95	180	200	No	-	Driveway spacing	None
79	Private drive	North	Residential	180	90	200	No	-		None
PR27	Lawn Street	Both	Full movement	290	310	-	-	-	Local road	None
80	Private drive	South	Residential	200	70	200	No	-		None

ID**	Access point	Side of US 12	Access type	Spacing to nearest public road to west (feet)	Spacing to nearest public road to east (feet)	Minimum spacing to nearest public road (feet)	Meets spacing standards to nearest public road	*Meets driveway spacing standard	Notes	Recommendation
PR28	High Street	Both	Full movement	310	330	-	-	-	Local road	None
81	Private drive	South	Residential	85	230	200	No	-		None
82	Private drive	South	Residential	190	120	200	No	-		None
83	Private drive	South	Residential	220	100	200	No	-		None
84	Private drive	North	Residential	195	120	200	No	-		None
85	Private drive	North	Residential	250	60	200	No	-		None
PR29	Simonsen Street	North	Full movement	330	350	-	-	-	Local road	None
86	Church drive	South	Institutional	10	340	200	No	-	Church access	None
87	Private drive	South	Residential	40	300	200	No	-	Driveway spacing	None
88	Private drive	South	Residential	145	190	200	No	-		None
89	Private drive	North	Residential	205	120	200	No	-		None
89.1	Private drive	South	Residential	300	45	200	No	-	Shared access	None
PR30	2nd Street	North	Full movement	350	1,740	-	-	-	Local road	None
90	Private drive	South	Residential	100	1,610	305	No	-	Access at 89.1	Remove access
91	Private drive	North	Residential	210	1,500	305	No	-		Consol. w/92 if use changes
92	Private drive	North	Commercial	280	1,430	305	No	-	Lake Ripley Restaurant	Remove access
93	Private drive	North	Commercial	365	1,340	305	Yes	-	Lake Ripley Restaurant	None
94	Private drive	North	Commercial	450	1,250	305	Yes	-	Lake Ripley Restaurant	None
95	Private drive	North	Commercial	590	1,130	305	Yes	-	Driveway spacing	Consider joint access
96	Private drive	North	Commercial	670	1,050	305	Yes	-	Driveway spacing	Consider joint access
97	Private drive	South	Commercial	785	935	305	Yes	-		Consider removal
98	Private drive	North	Residential	870	850	305	Yes	-	Driveway spacing	Joint access
99	Private drive	North	Residential	910	810	305	Yes	-	Driveway spacing	Consider removal
100	Private drive	North	Residential	1,020	700	305	Yes	-		None
101	Private drive	South	Commercial	1,170	550	305	Yes	-		Consider realign
102	Private drive	North	Residential	1,245	475	305	Yes	-		Joint with 103
103	Private drive	North	Residential	1,305	415	305	Yes	-		Joint with 102
104	Private drive	South	Commercial	1,430	290	305	No	-		None
PR31	Park Road	North	Full movement	1,740	635	-	-	-	Local road	None
105	Private drive	North	Commercial	190	420	305	No	-	Driveway spacing	None
106	Private drive	South	Commercial	185	420	305	No	-	Two accesses	Consolidate
107	Private drive	South	Commercial	255	355	305	No	-	Two accesses	None
108	Private drive	South	Commercial	365	250	305	No	-		Not permitted
PR32	Alpine Village Lane	North	Full movement	635	280	-	-	-	Local road	None
PR33	Golf Side Lane	North	Full movement	280	550	-	-	-	Local road	None
109	Private drive	North	Residential	205	340	305	No	-		None

ID**	Access point	Side of US 12	Access type	Spacing to nearest public road to west (feet)	Spacing to nearest public road to east (feet)	Minimum spacing to nearest public road (feet)	Meets spacing standards to nearest public road	*Meets driveway spacing standard	Notes	Recommendation
110	Private drive	South	Residential	220	325	305	No	-	Driveway spacing	None
111	Private drive	South	Residential	480	60	305	No	-	Driveway spacing	None
PR34	Sleepy Hollow Road	North	Full movement	550	1,000	-/2,000	No	-	Local road	None
112	Church drive	North	Institutional	270	700	1,000	No	No	Access on Sleepy Hollow	Remove access
113	Private drive	North	Residential	860	125	1,000	No	No		None
114	Private drive	North	Residential	975	5	1,000	No	No	Spacing to Sleep Hollow	Remove access; relo to Porter
PR35	Porter Drive	North	Full movement	1,000	1,000	2,000	No	-	Local road	Evaluate for geometrics
115	Private drive	North	Residential	90	890	1,000	No	No		None
116	Field entrance	South	Agricultural	260	740	1,000	No	No	Driveway spacing	None
117	Private drive	North	Residential	400	600	1,000	No	No	Driveway spacing	None
PR36	W Cedar Road	South	Full movement	1,000	910	2,000	No	-	Local road	None
118	Private drive	North	Residential	390	500	1,000	No	No		None
119	Private drive	North	Residential	600	300	1,000	No	No		None
PR37	Marina Lane	North	Full movement	910	470	2,000	No	-	Local road	None
PR38	Majestic Circle	North	Full movement	470	860	2,000	No	-	Local road	Evaluate for closure
120	Private drive	South	Residential	150	690	1,000	No	No		None
PR39	Island Lane	North	Full movement	860	1,180	2,000	No	-	Local road	None
121	Private drive	North	Residential	1,130	60	1,000	No	No	Prop has three access points	Remove access
PR40	Airport Road	South	Full movement	1,180	1,450	2,000	No	-	Local road	None
122	Private drive	North	Residential	0	0	1,000	Yes	No	Opposite Airport Rd	None
123	Field entrance	North	Agricultural	510	940	1,000	No	No		Access at 122 if use changes
124	Private drive	South	Residential	640	780	1,000	No	No		None
125	Private drive	North	Residential	770	660	1,000	No	No		None
PR41	Meadow Drive	North	Full movement	1,450	620	2,000	No	-	Spacing to County A	None
126	Public drive	South	Institutional	50	540	1,000	No	No		None
PR42	County A north	North	Full movement	620	1,400	2,000	No	-	Local road	None
127	Field entrance	South	Agricultural	0	0	1,000	Yes	No	Opposite County A; unused	Convert to joint
128	Private drive	South	Residential	0	0	1,000	Yes	No	Opp. County A; on curve	Convert to joint
129	Private drive	South	Residential	460	930	1,000	No	No	On curve	None
130	Private drive	North	Residential	880	510	1,000	No	No		None
PR43	Brosig Lane	South	Full movement	1,400	3,450	2,000	No	-	Local road; on curve	None
131	Private drive	North	Residential	290	3,150	1,000	No	No		None
132	Private drive	South	Residential	780	2,640	1,000	No	No	On curve	None
133	Field entrance	South	Agricultural	1,020	2,420	1,000	Yes	No	On curve; unused	Remove access
134	Private drive	North	Residential	2,550	890	1,000	No	No		None
135	Field entrance	South	Agricultural	2,560	870	1,000	No	No		None

ID**	Access point	Side of US 12	Access type	Spacing to nearest public road to west (feet)	Spacing to nearest public road to east (feet)	Minimum spacing to nearest public road (feet)	Meets spacing standards to nearest public road	*Meets driveway spacing standard	Notes	Recommendation
PR44	County A south/Langhoff	Both	Full movement	3,450	3,120	2,000	Yes	-	Local road	None
136	Private drive	North	Residential	300	2,800	1,000	No	No	Close to County A/Langhoff	Remove if use changes
137	Field entrance	North	Agricultural	1,430	1,670	1,000	Yes	No		None
138	Private drive	South	Residential	1,690	1,410	1,000	Yes	No		None
139	Private drive	South	Residential	2,130	975	1,000	No	No		None
140	Private drive	North	Residential	2,220	880	1,000	No	No	Spacing to Oakland Rd	Consolidate access
141	Private drive	North	Commercial	2,320	785	1,000	No	No	Spacing to Oakland Rd	Consolidate access
142	Private drive	North	Commercial	2,400	710	1,000	No	No	Spacing to Oakland Rd	Consolidate access
143	Private drive	North	Commercial	2,560	540	1,000	No	No	Spacing to Oakland Rd	Consolidate access
144	Private drive	North	Commercial	2,750	360	1,000	No	No	Spacing to Oakland Rd	Consolidate access
145	Private drive	North	Residential	2,850	250	1,000	No	No	Spacing to Oakland Rd	Consolidate access
146	Private drive	North	Residential	2,910	200	1,000	No	No	Spacing to Oakland Rd	Consolidate access
PR45	Oakland Road	Both	Full movement	3,120	5,500	2,000	No	-	Local road	None
147	Field entrance	North	Agricultural	1,600	3,880	1,000	Yes	Yes		None
148	Private drive	South	Residential	1,610	3,880	1,000	Yes	Yes		None
149	Field entrance	South	Agricultural	2,825	2,650	1,000	Yes	No		None
150	Private drive	North	Residential	3,060	2,430	1,000	No	No		None
151	Field entrance	North	Agricultural	3,200	2,280	1,000	No	No		Remove access
152	Private drive	South	Residential	4,800	680	1,000	No	No		Consider joint access w/153
153	Private drive	South	Residential	4,930	540	1,000	No	No		Consider joint access w/152
PR46	Oestreich Lane	Both	Full movement	5,500	1,140	2,000	No	-	Local road	None
154	Private drive	North	Residential	1,070	60	1,000	No	No	Joint driveway; spacing	Consider joint with 155
PR47	Trieloff Road	South	Full movement	1,140	1,690	2,000	No	-	Local road	None
155	Private drive	North	Residential	30	1,650	1,000	No	No	Joint driveway; spacing	Consider joint with 154
156	Private drive	North	Residential	520	1,130	1,000	No	No	Joint driveway	None
157	Private drive	South	Residential	1,020	650	1,000	No	No		None
PR48	Ehrke Road	North	Full movement	1,690	2,370	2,000	No	-	Local road	None
158	Private drive	South	Residential	370	1,990	1,000	No	No	On curve	None
159	Field entrance	North	Agricultural	910	1,460	1,000	No	No	On curve	Not permitted
160	Private drive	South	Residential	1,445	920	1,000	No	No	On curve	None
161	Private drive	North	Residential	1,480	920	1,000	No	No	On curve	None
162	Field entrance	South	Agricultural	1,560	790	1,000	No	No	On curve	Remove access
163	Private drive	North	Residential	1,930	440	1,000	No	No	Spacing to County J	None
PR49	County J	Both	Full movement	2,370	7,420	2000	Yes	-	Minor collector	None
164	Private drive	South	Agriculture	580	>5,000	1,000	No	No	Spacing to County J	Relocate to County J
165	Private drive	South	Agricultural	1,670	>5,000	1,000	Yes	No	Busy Bees Farm	None

ID**	Access point	Side of US 12	Access type	Spacing to nearest public road to west (feet)	Spacing to nearest public road to east (feet)	Minimum spacing to nearest public road (feet)	Meets spacing standards to nearest public road	*Meets driveway spacing standard	Notes	Recommendation
166	Private drive	South	Residential	2,460	4,910	1,000	Yes	No	Driveway spacing	Consider Consolidating
167	Field entrance	North	Agricultural	2,540	4,820	1,000	Yes	No	Driveway spacing; permit	Not permitted
168	Field entrance	South	Agricultural	2,570	4,800	1,000	Yes	No	Driveway spacing	Consider Consolidating
169	Private drive	North	Residential	3,100	4,295	1,000	Yes	-	Driveway spacing	Consider Consolidating
169.1	Field entrance	South	Agricultural	3,165	4,235	1,000	Yes	No	Driveway spacing	Consider Consolidating
170	Private drive	North	Residential	3,220	4,180	1,000	Yes	No	Shared drive; u-drive 173	Consider Consolidating
171	Field entrance	South	Agricultural	3,275	4,130	1,000	Yes	No	Connected to 172	Consider Consolidating
172	Private drive	South	Residential	3,435	3,930	1,000	Yes	No	Connected to 171	Consider Consolidating
173	Private drive	North	Residential	3,545	3,810	1,000	Yes	No	Shared drive; u-drive 170	Consider Consolidating
174	Field entrance	South	Agricultural	4,180	3,195	1,000	Yes	No	On curve	None
175	Private drive	North	Residential	4,535	2,840	1,000	Yes	No	Curve; conn'd to 176, 177	Remove access
176	Private drive	North	Residential	4,605	2,770	1,000	Yes	No	Curve; conn'd to 175, 177	None
176.1	Field entrance	South	Agricultural	4,640	2,680	1,000	Yes	No	On curve; curb is present	Not permitted
177	Private drive	North	Commercial	4,890	2,470	1,000	Yes	No	Curve; conn'd to 175, 176	Permit is for ag use
178	Cemetery drive	North	Institutional	>5,000	1,280	1,000	Yes	No		None
179	Field entrance	North	Agricultural	>5,000	1,170	1,000	Yes	No	Access from County G	Remove access
180	Private drive	South	Residential	>5,000	650	1,000	No	No		Consider joint with 181
181	Field entrance	South	Agricultural	>5,000	490	1,000	No	No		Consider joint with 180
PR50	County G	North	Full movement	7,420	2,240	2,000	Yes	-	Local road	None
182	Field entrance	North	Agricultural	420	1,825	1,000	No	No	Access from County G	Relocate if safety warrants
183	Field entrance	North	Agricultural	1,090	1,100	1,000	Yes	No		None
184	Private drive	South	Residential	1,175	1,090	1,000	Yes	No		None
185	Private drive	North	Residential	1,250	1,030	1,000	Yes	No	Shared access with 185	Remove access
186	Private drive	North	Residential	1,380	890	1,000	No	No		None
187	Private drive	South	Residential	1,390	890	1,000	No	No	Other access at 184	Remove access
188	Utility & field entrance	South	Ag/Commercial	1,530	730	1,000	No	No	Access to cellphone tower	Consider consolidating
189	Field entrance	North	Agricultural	1,590	690	1,000	No	No		Not Permitted
190	Field entrance	South	Agricultural	2,080	150	1,000	No	No		Remove access
191	Field entrance	North	Agricultural	2,100	145	1,000	No	No	Access from Radloff Lane	Remove access
192	Private drive	South	Residential	0	0	1,000	No	No	Opposite Radloff Lane	None
PR51	Radloff Lane	North	Full movement	2,240	2,820	2,000	Yes	-	Local road	None
193	Private drive	South	Residential	680	2,095	1,000	No	No		None
194	Private drive	North	Residential	700	2,100	1,000	No	No		None
195	Field entrance	North	Agricultural	1,350	1,370	1,000	Yes	No		None
196	Private drive	North	Residential	1,870	930	1,000	No	No		None
197	Field entrance	South	Agricultural	1,850	910	1,000	No	No		None

ID**	Access point	Side of US 12	Access type	Spacing to nearest public road to west (feet)	Spacing to nearest public road to east (feet)	Minimum spacing to nearest public road (feet)	Meets spacing standards to nearest public road	*Meets driveway spacing standard	Notes	Recommendation
PR52	County C/Hoard Road	Both	Full movement	2,820	3,390	1 mile	No	-	Major collector	None
198	Private drive	North	Residential	170	3,165	1,000	No	No	Spacing to Hoard Rd	Remove access
199	Private drive	South	Residential	205	3,170	1,000	No	No	Spacing to County C	Remove access
200	Private drive	North	Residential	300	3,030	1,000	No	No	Spacing to Hoard Rd	Remove access
201	Private drive	South	Residential	305	3,070	1,000	No	No	Spacing to County C	Remove access
202	Private drive	North	Residential	330	3,005	1,000	No	No	Spacing to Hoard Rd	Not permitted
203	Private drive	North	Residential	550	2,800	1,000	No	No		Remove access
204	Private drive	North	Residential	1,280	2,060	1,000	Yes	No		Remove access
205	Field entrance	South	Agricultural	1,340	2,050	1,000	Yes	No		Remove access
206	Field entrance	South	Agricultural	2,120	1,250	1,000	Yes	No	Access available at 205	Remove access
207	Private drive	North	Residential	2,850	480	1,000	No	No	Spacing to freeway ramp	Remove access
208	Private drive	South	Residential	3,180	170	1,000	No	No	Spacing to freeway ramp	Remove access
PR53	WIS 26	Both	Interchange	3,390	-	2 miles	Yes	-	Principal arterial	None

**Table 45 located on page 123 provides urban and rural driveway spacing standards*

***The colors in the table above indicate speed limit changes throughout the corridor. Colors are defined below.*

55 MPH
45 MPH
35 MPH
25 MPH

2.2 Access Management Plan Recommendations

An access management plan has been created in accordance with WisDOT guidelines to assist WisDOT and local communities to develop a long-term vision for the US 12 corridor. The plan can act as a guide to local officials to determine the appropriate type, scale, and location of any future development along the corridor. The US 12 corridor has been analyzed for access deficiencies that could have a negative impact on the function of the highway; long-term recommendations have been created to eliminate or reduce these impacts. The recommendations are listed on the pages following exhibit 11. Recommendations that affect more than one access location are identified with a black oval around the access locations. Access recommendations in exhibit 11 are indicated by the symbols explained in the map legend. For example, a red X would indicate removing a driveway from US 12. Maps 9 and 10 show a shorter term recommendation for the area outlined in black dash. Map 11 within exhibit 11 shows an off-alignment alternative constructing a service road system. The long-term recommendation shown on Map 11 is the desirable alternative to mitigate the high number of existing access locations both public and private.

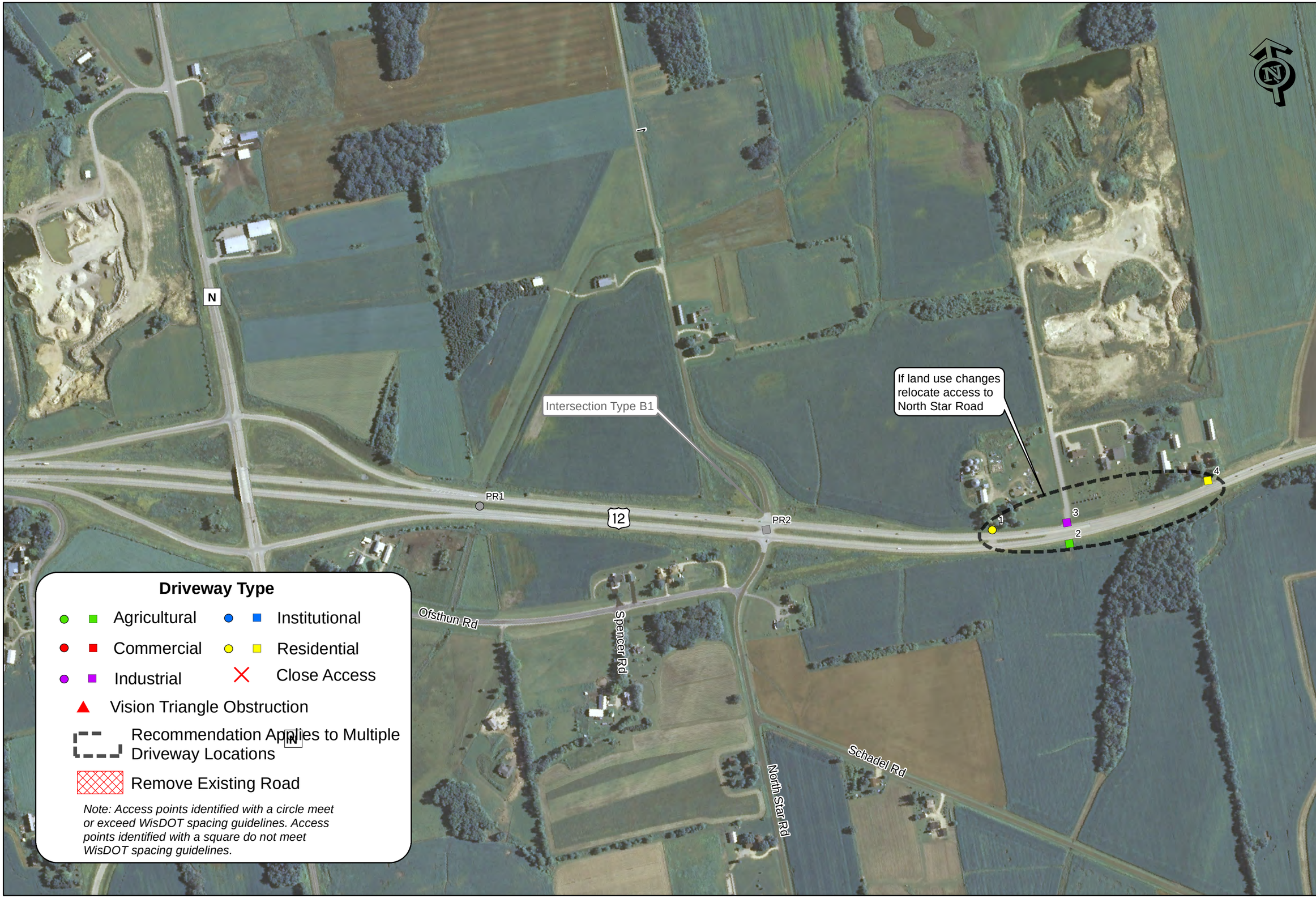

Map 1

Exhibit 11

Access Plan Maps

US 12 Corridor Study

1 In = 500 Ft

TranSmart

Map 2
Exhibit 11

Access Plan Maps

US 12 Corridor Study

1 In = 500 Ft

TranSmart

Map 3
Exhibit 11

Access Plan Maps

US 12 Corridor Study

1 In = 500 Ft

TranSmart

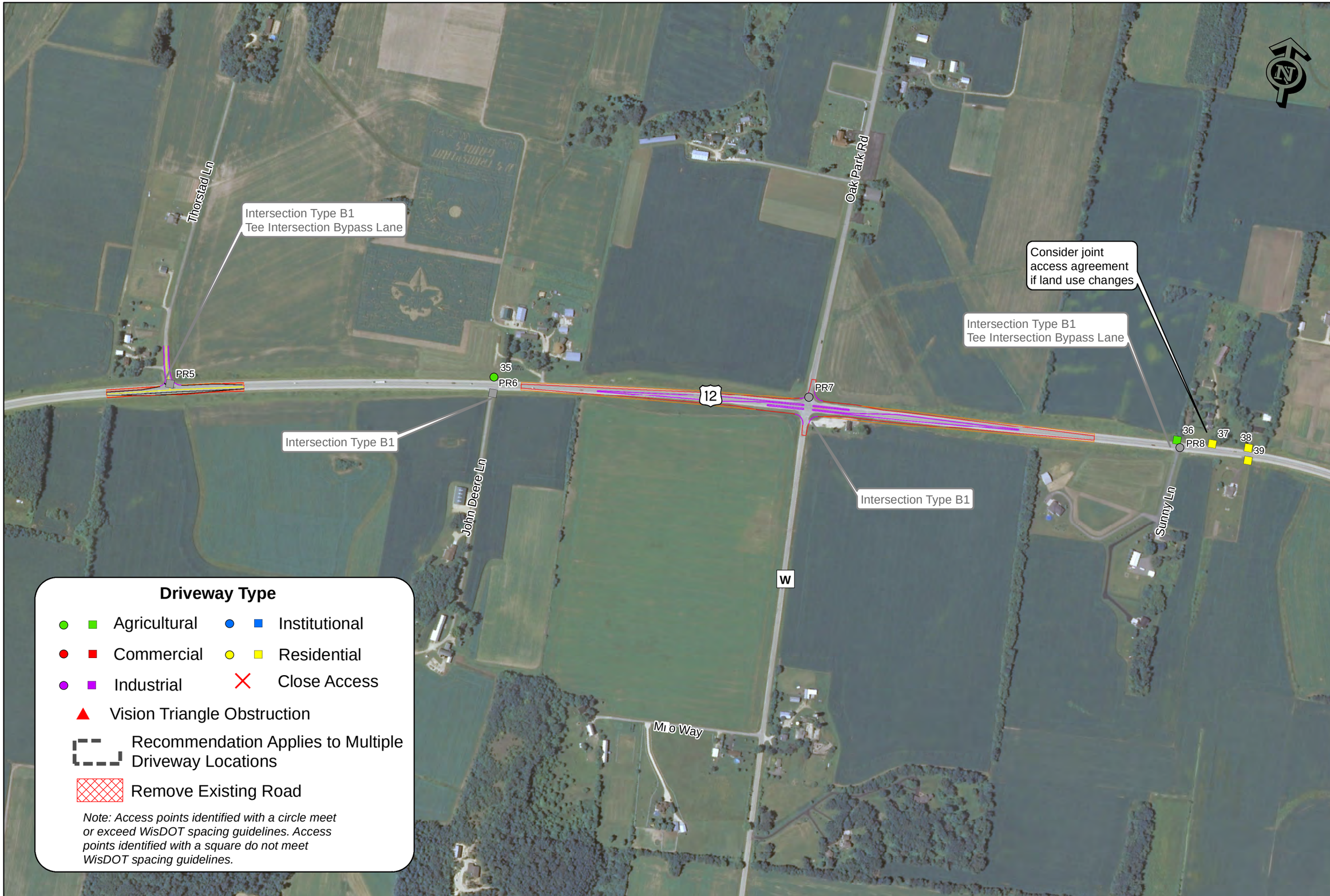

Map 4
Exhibit 11

Access Plan Maps

US 12 Corridor Study

1 In = 500 Ft

TranSmart

Map 5
Exhibit 11

Access Plan Maps

US 12 Corridor Study

1 In = 500 Ft

TranSmart

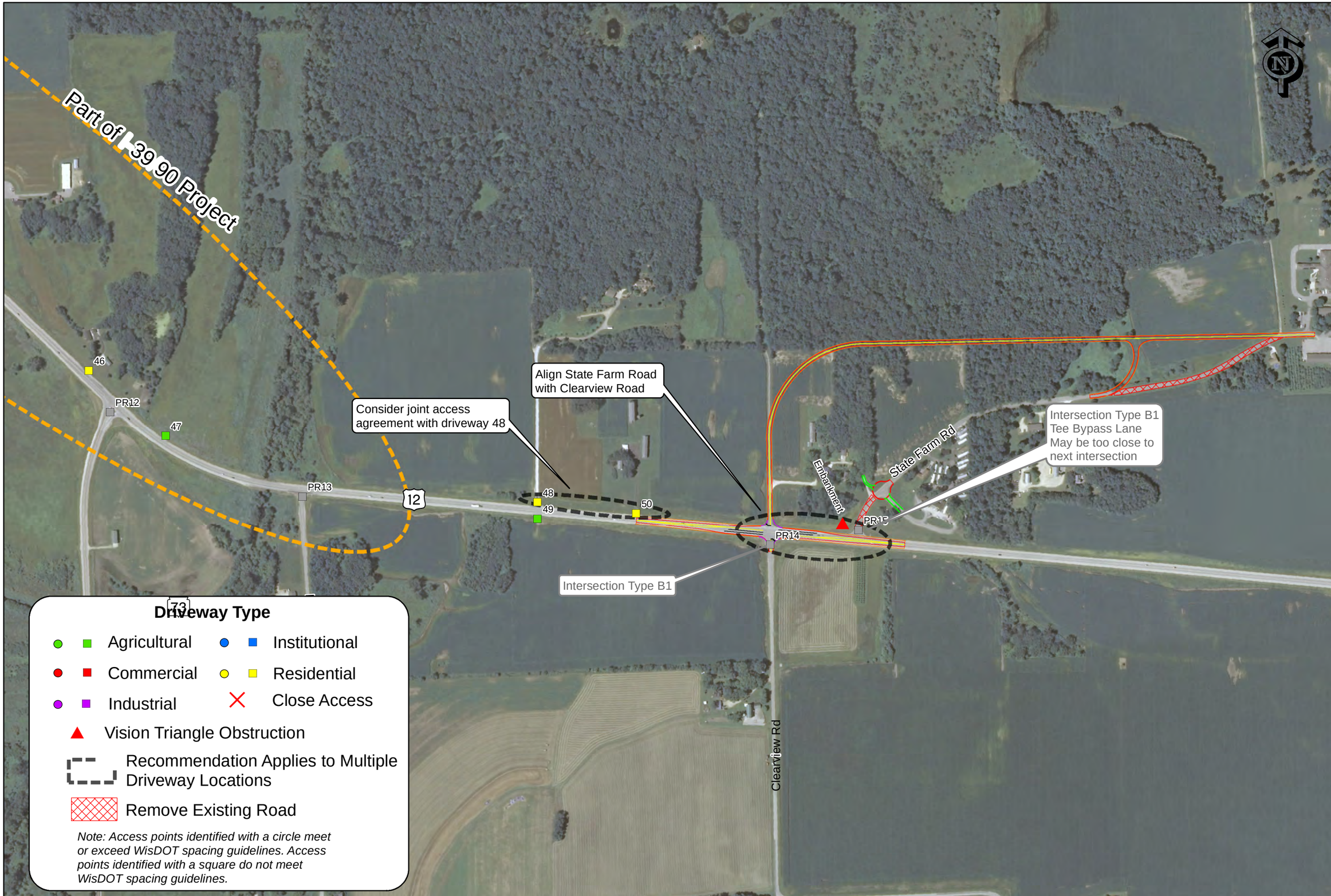

Map 6
Exhibit 11

Access Plan Maps

US 12 Corridor Study

1 In = 500 Ft

TranSmart

Map 7
Exhibit 11

Access Plan Maps

US 12 Corridor Study

1 In = 500 Ft

TranSmart

Map 8
Exhibit 11

Access Plan Maps

US 12 Corridor Study

1 In = 300 Ft

TranSmart

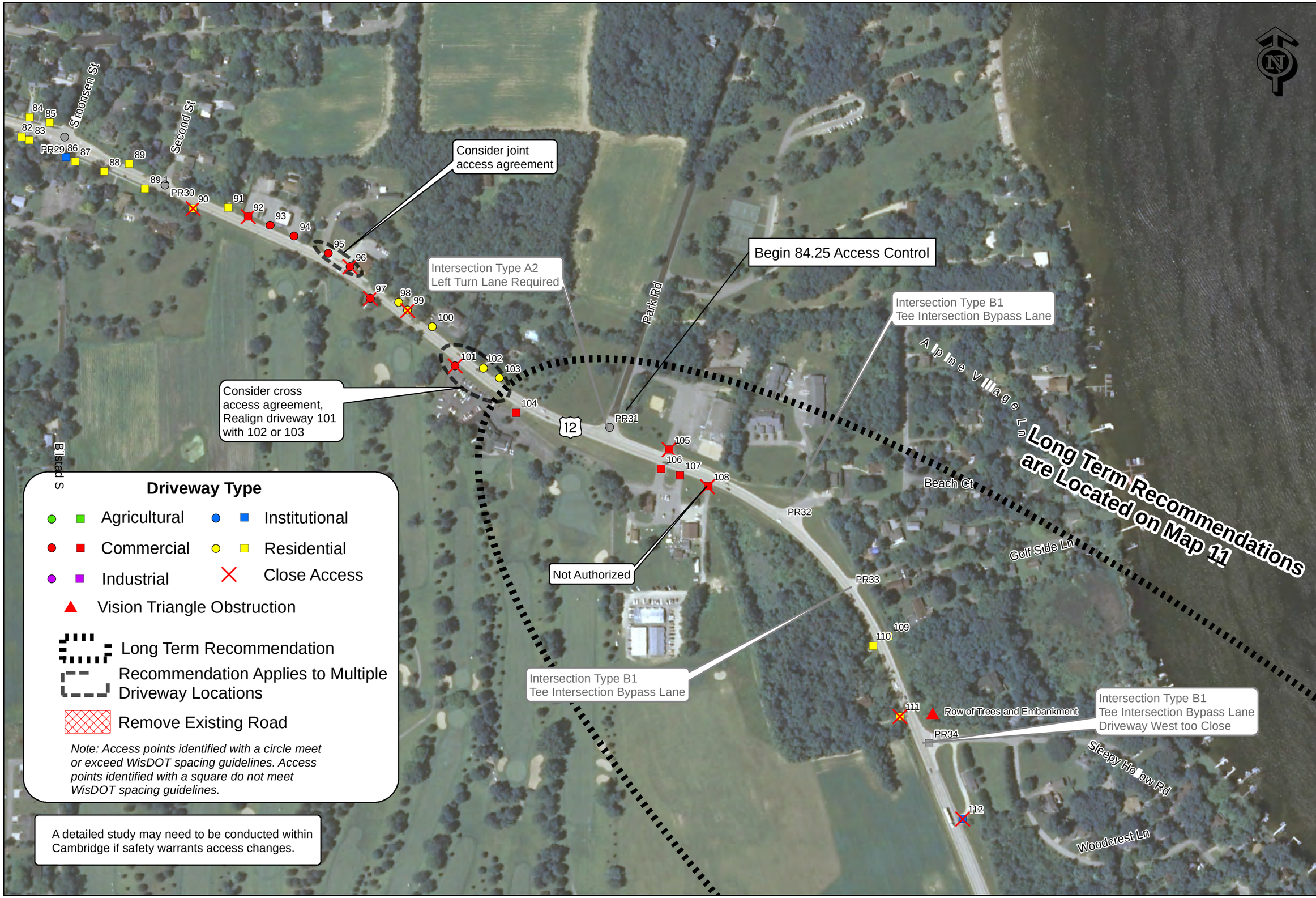

Map 9
Exhibit 11

Access Plan Maps

US 12 Corridor Study

1 In = 300 Ft

TranSmart

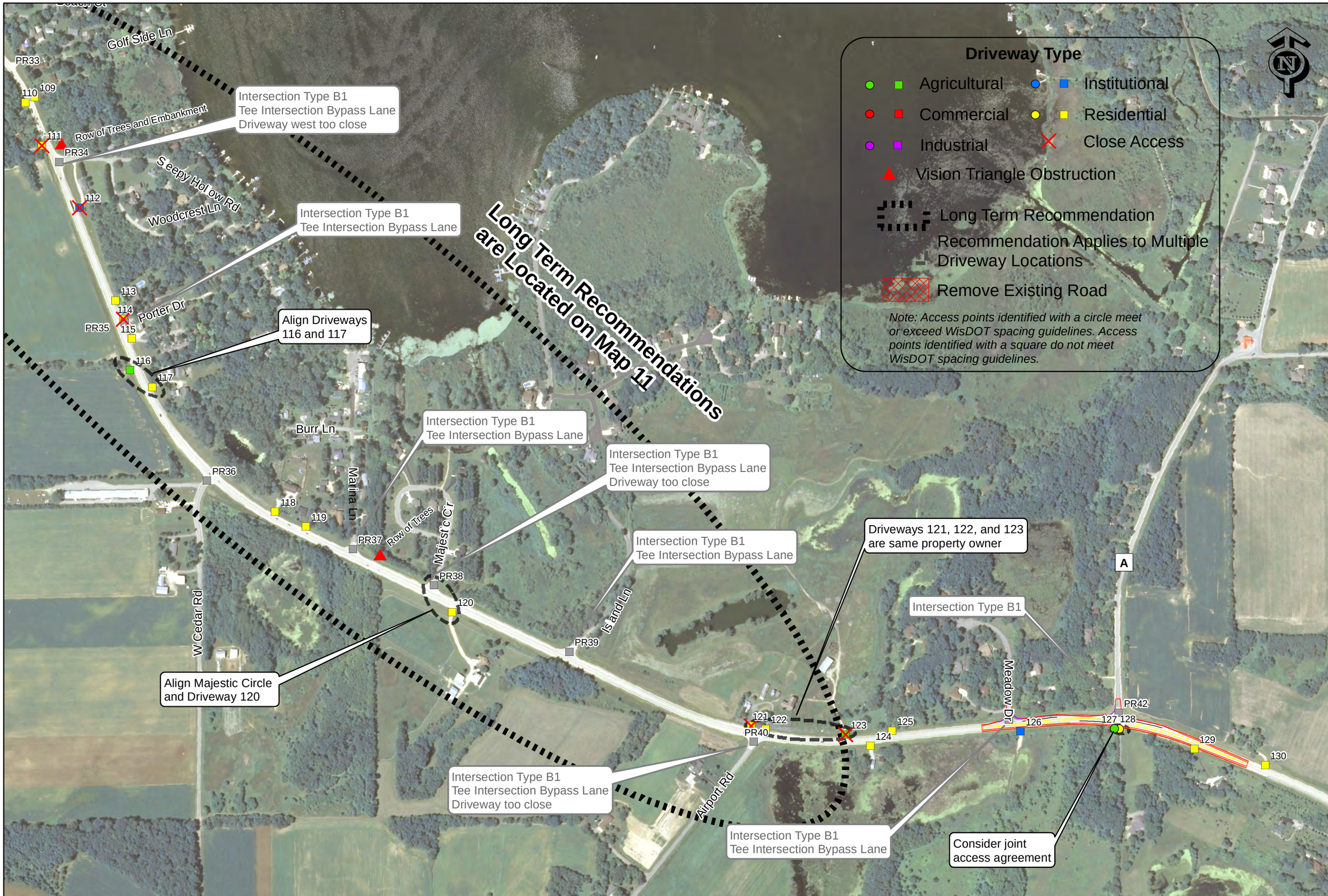

Map 10
Exhibit 11

Access Plan Maps

US 12 Corridor Study

1 In = 500 Ft

TranSmart

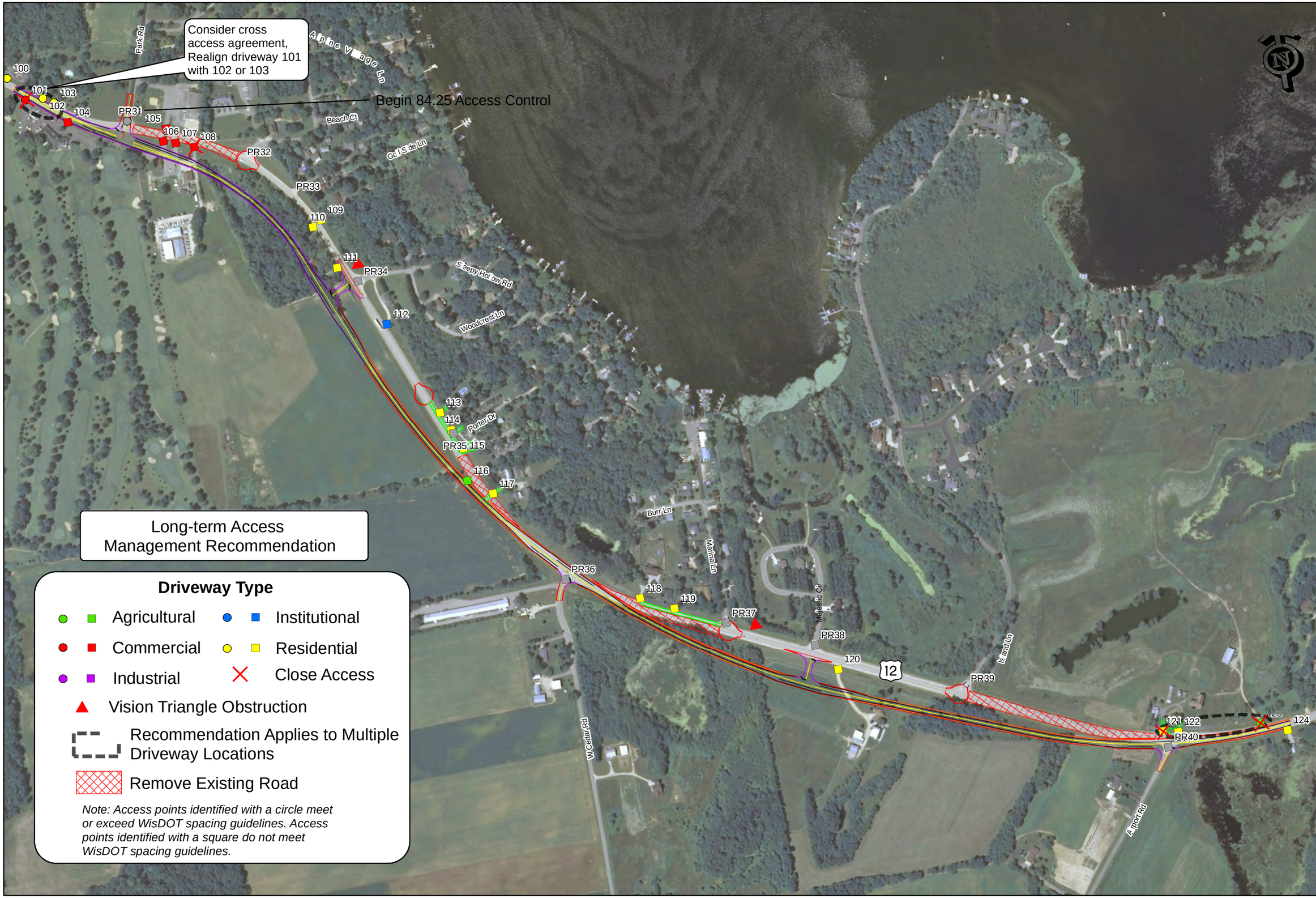

Map 11
Exhibit 11

Access Plan Maps

US 12 Corridor Study

Not to Scale

TranSmart

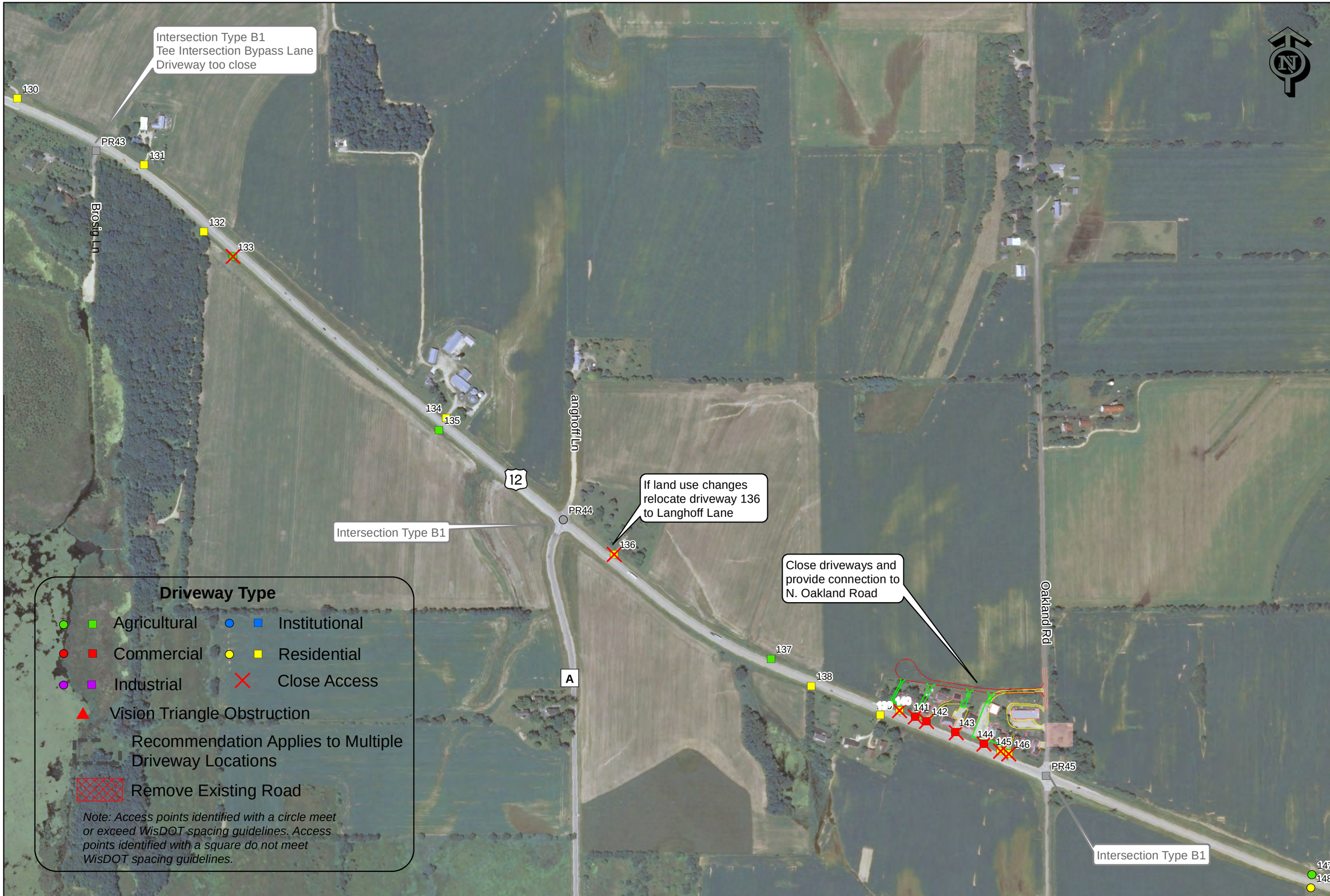

Map 12
Exhibit 11

Access Plan Maps

US 12 Corridor Study

1 In = 500 Ft

TranSmart

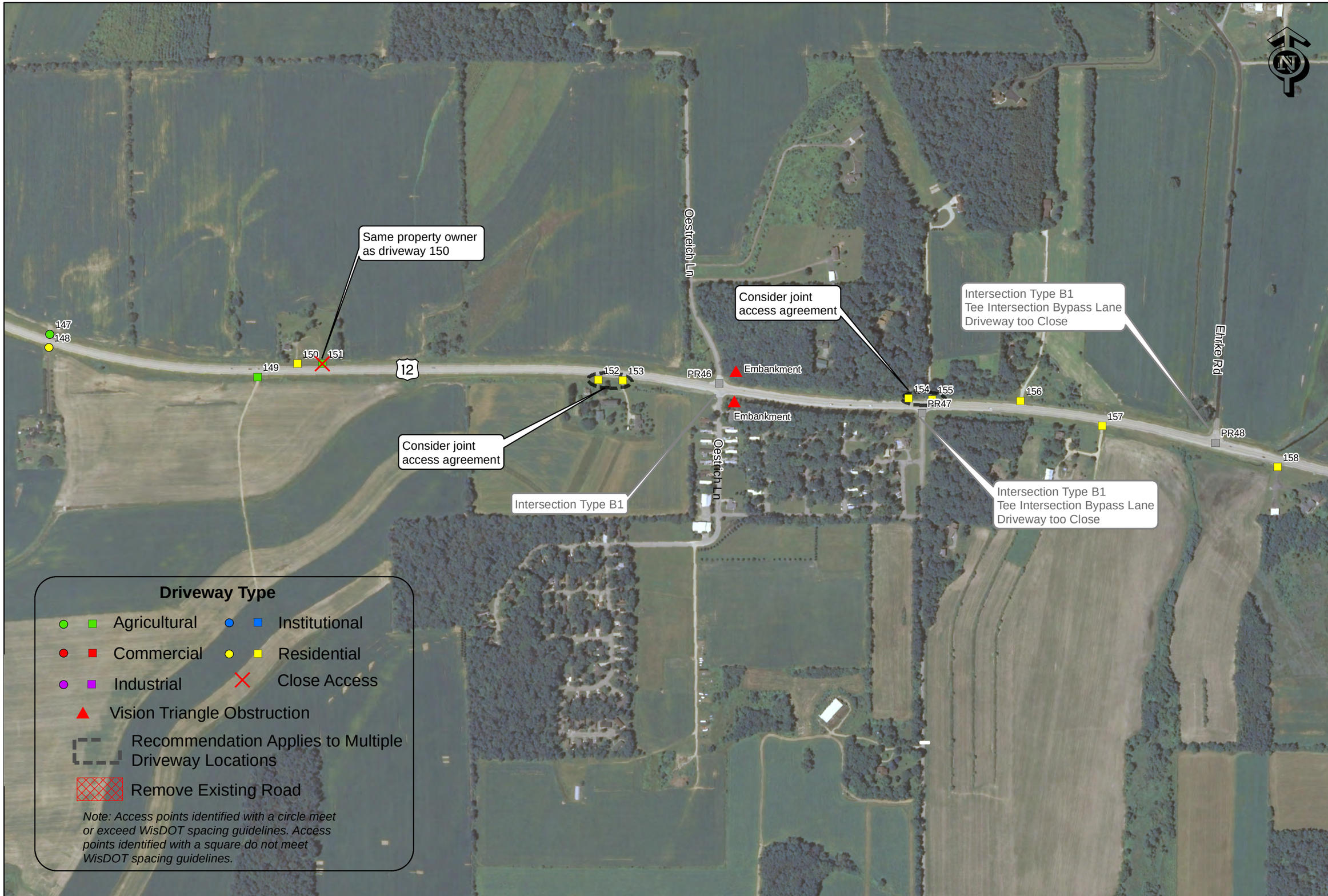

Map 13
Exhibit 11

Access Plan Maps

US 12 Corridor Study

1 In = 500 Ft

TranSmart

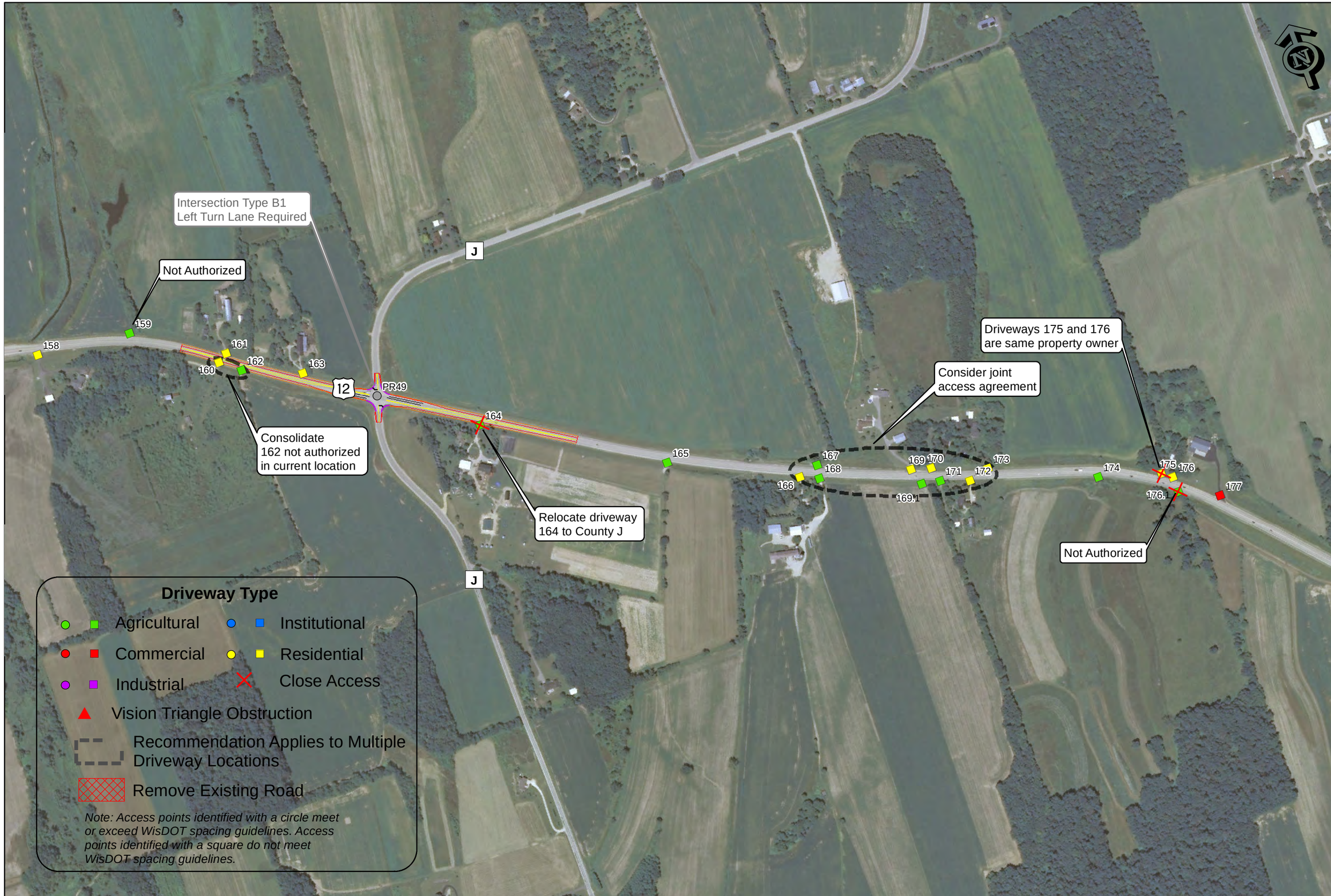

Map 14
Exhibit 11

Access Plan Maps

US 12 Corridor Study

1 In = 500 Ft

TranSmart

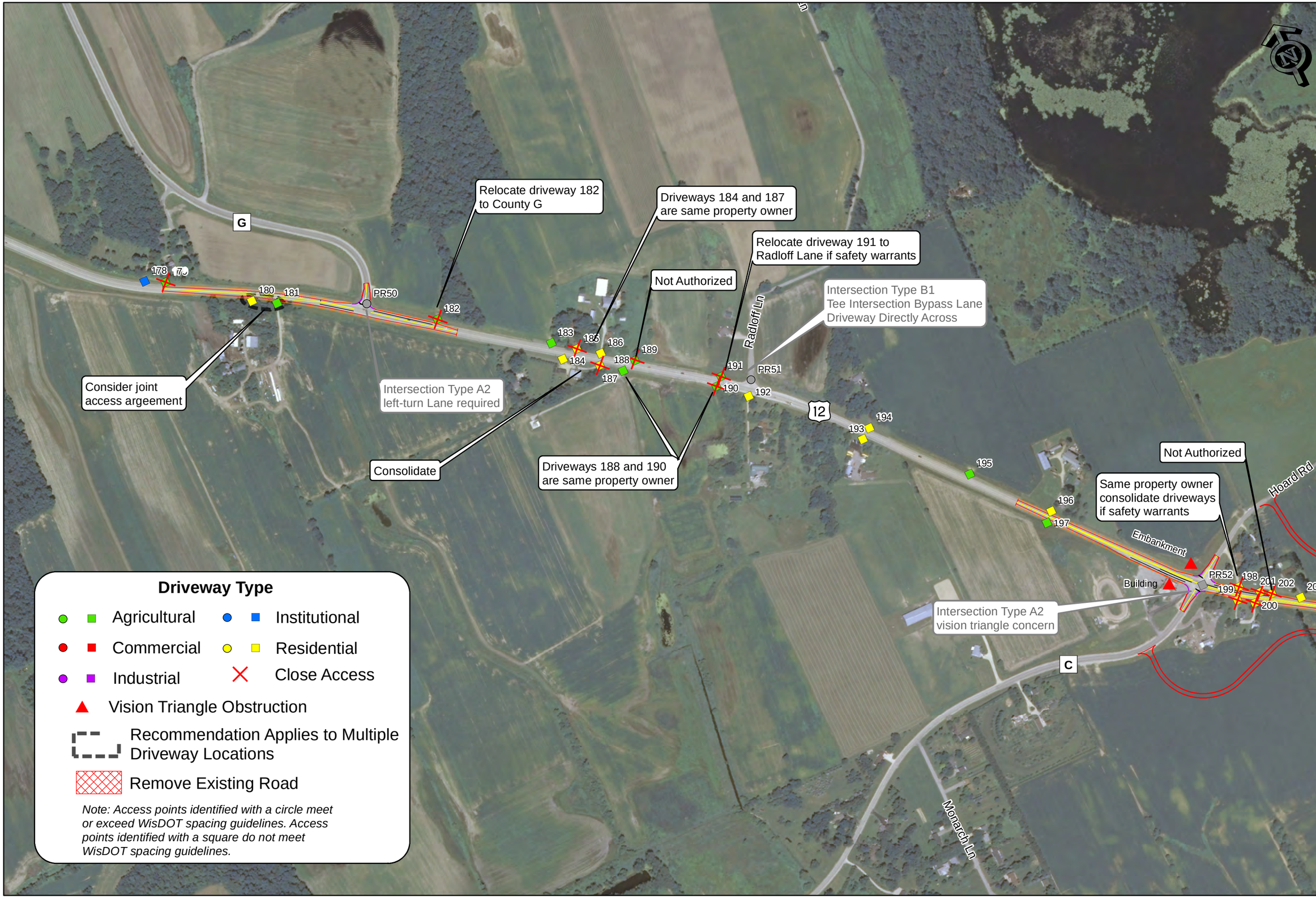

Map 15
Exhibit 11

Access Plan Maps

US 12 Corridor Study

1 In = 500 Ft

TranSmart

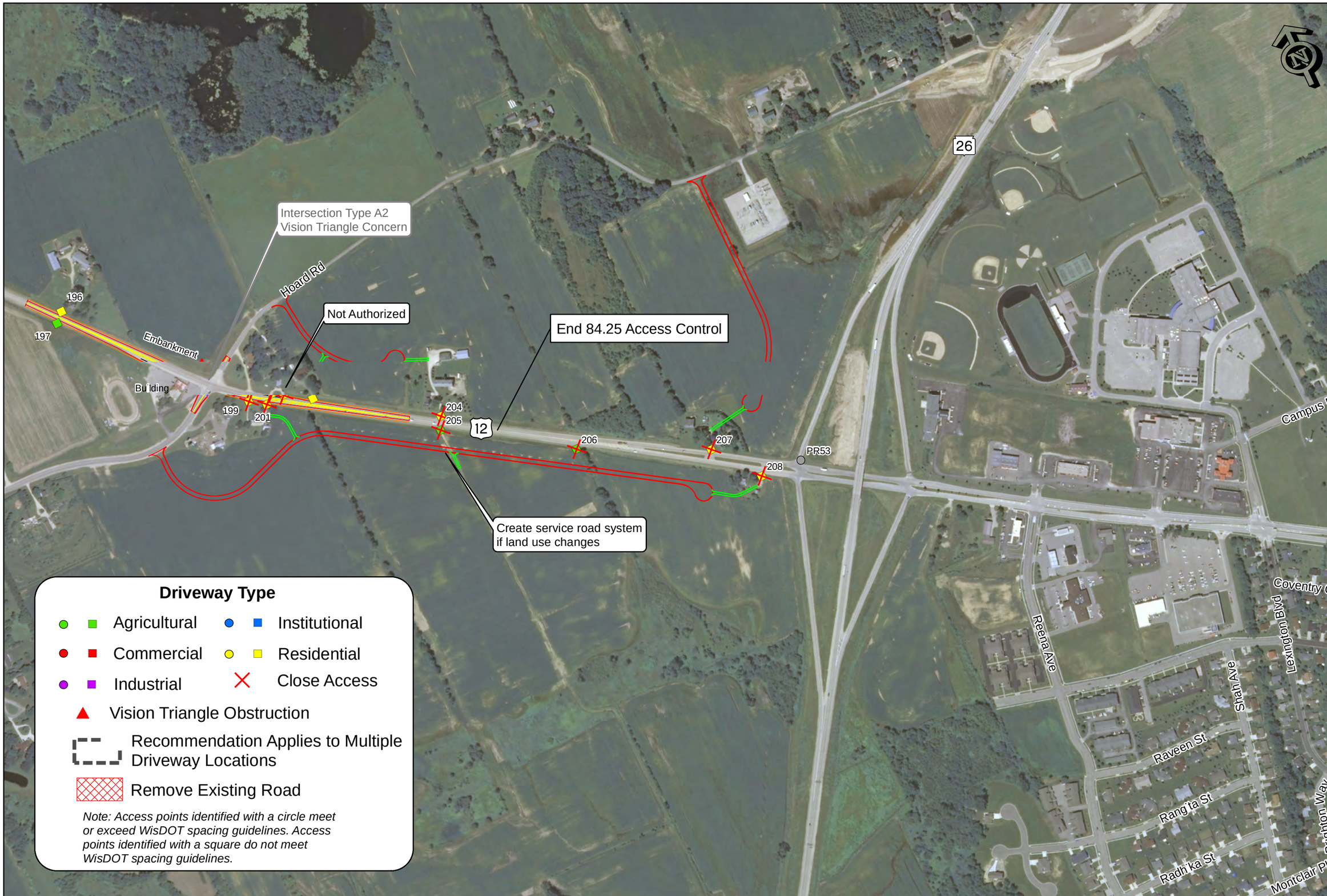

Map 16
Exhibit 11

Access Plan Maps

US 12 Corridor Study

1 In = 500 Ft

TranSmart

Detailed Access Management Strategies and Recommendations

Map 1

- North Star Road does not meet current intersection design standards and is recommended to be improved to the current standard for a Type B1 intersection if/when safety warrants.
- Driveways 2 and 3 are located in the two- to four-lane transition area and are located less than the desirable access spacing distance to other driveways nearby. Explore opportunities to consolidate and relocate industrial and residential driveways 1, 3, and 4 if land use changes or safety/operations warrant. A long-term recommendation could include providing a connection to North Star Road and eliminating the private driveways.

Map 2

- If existing land uses change or safety/operations warrant, consider consolidating residential driveways 5 and 7, 6 and 8, and 9 and 10.
- Remove driveway 14. The agricultural field appears to have access from driveway 16. Both properties are owned by the same farm operation.
- Consolidate driveways 18 and 19 if safety becomes an issue.
- Driveway 20 is located 570 feet from the US 12/County BN/Nora Road intersection. If land use changes or the intersection is reconstructed, consider opportunities to relocate the driveway to Nora Road.
- County BN/Nora Road does not meet current intersection design standards and is recommended to be improved to the current standard for a Type B1 intersection if/when safety warrants. Recommendations include adding right and left-turn lanes for both US 12 approaches.

Map 3

- If the existing land use changes or safety/operations warrant, relocate driveway 21 to County BN.
- Deerfield Road does not meet current intersection design standards and is recommended to be improved to the current standard for a Type B1 intersection if/when safety warrants.
- Realign driveways 29 and 30 across from each other.
- Remove driveway 33. The agricultural field appears to have access from driveway 31. Both properties are owned by the same farm operation.

Map 4

- Thorstad Lane does not meet current intersection design standards and is recommended to be improved to the current standard for a Type B1 intersection if/when safety warrants. Recommendations include adding an eastbound bypass lane to the tee intersection.
- Driveway 35 was relocated across from John Deere Lane. In 2013, shoulders were paved in the vicinity of driveway 35 to improve safety and operations of the highway during the agricultural business season. The proximity of John Deere Lane to County W/Oak Park Road should be considered as part of future design.

- John Deere Lane is recommended to be improved to the current standard for a Type B1 intersection if/when safety warrants.
- County W/Oak Park Road does not meet current intersection design standards and is recommended to be improved to the current standard for a Type B1 intersection if/when safety warrants. Recommendations include adding right and left-turn lanes for both US 12 approaches.
- Sunny Lane does not meet current intersection design standards and is recommended to be improved to the current standard for a Type B1 intersection if/when safety warrants.
- If land use changes, driveways 36, 37, and 38 should be considered for joint access located directly across from Sunny Lane.

Map 5

- Nuland Road does not meet current intersection design standards and is recommended to be improved to the current standard for a Type B1 intersection if/when safety warrants.
- The WIS 73 intersections fall within the purview of the I-39/90 project. A preferred alternative for WIS 73 will be developed as part of that project. Depending on the alternative selected, road alignments and access within the area between Nuland Road and Fadness Lane could change.

Map 6

- Consider joint access agreement between driveways 48 and 50.
- Clearview Road does not meet current intersection design standards and is recommended to be improved to the current standard for a Type B1 intersection if/when safety warrants.
- State Farm Road does not meet current intersection design standards and is recommended to be improved to the current standard for a Type B1 intersection if/when safety warrants. Recommendations include adding an eastbound bypass lane to the tee intersection. Clearview Road may be too close to allow for construction of a bypass lane at State Farm Road (see next comment).
- If safety/operations issues arise, a long-term recommendation could include relocating State Farm Road (PR 15) to a new alignment with access to US 12 across from the existing Clearview Road intersection. This recommendation would consolidate the intersections.

Map 7

- If land use changes and/or safety issues arise, consider realigning driveways 54 and 55 across from each other.
- Consider opportunities to consolidate driveways 56 and 57 if development occurs (see Village of Cambridge comprehensive plan for potential land use changes).
- Rodney Lane does not meet current intersection design standards and is recommended to be improved to the current standard for a Type B1 intersection if/when safety warrants. Recommendations include adding a westbound bypass lane to the tee intersection.

- Drumlin Trail does not meet current intersection design standards and is recommended to be improved to the current standard for a Type B1 intersection if/when safety warrants. Recommendations include adding an eastbound bypass lane to the tee intersection.

Map 8

- Three intersection concepts were considered for the US 12/18 intersection including WIS 134 (see exhibit 8). Detailed descriptions of each alternative can be found in Part III, Section 1.0 Improvement Strategies. Depending on the long-term concept chosen, access for driveways 60 through 65 should be considered.
- Consider opportunities for cross access and consolidation of driveways 60, 61, 62, 63, and 65.
- Consider opportunities for cross access and consolidation of driveways 66, 67, and 68.
- Consider removal of driveways 74 and 75. Both properties appear to have multiple driveways.

Map 9 (Short-term recommendations)

- Remove driveway 90. It appears that the property has multiple driveways.
- Remove driveway 92. It appears that the property has multiple driveways.
- Consider opportunities to consolidate driveways 95 and 96, possibly through joint access agreements.
- Remove driveway 97. It appears that the property has multiple driveways.
- Remove driveway 99. It appears that the property has multiple driveways.
- Align driveway 101 with either driveway 102 or 103 if safety/operations issue arise.
- Consider a joint access agreement between driveways 102 and 103.
- Park Road does not meet current intersection design standards and is recommended to be improved to the current standard for a Type A2 intersection if/when safety warrants. Recommendations include adding a left-turn lane to the tee intersection.
- Remove driveway 105. Property appears to have access to Park Road.
- Remove driveway 108. It appears that the property has multiple driveways.
- Alpine Village Lane does not meet current intersection design standards and is recommended to be improved to the current standard for a Type B1 intersection if/when safety warrants. Recommendations include adding a bypass lane to the tee intersection.
- Golf Side Lane does not meet current intersection design standards and is recommended to be improved to the current standard for a Type B1 intersection if/when safety warrants. Recommendations include adding a bypass lane to the tee intersection.
- Remove driveway 111. It appears that the property has multiple driveways.
- Sleepy Hollow Road does not meet current intersection design standards and is recommended to be improved to the current standard for a Type B1 intersection if/when safety warrants. Recommendations include adding a left-turn lane to the tee intersection; driveway 111 may be too close to the intersection to construct a bypass lane.
- Remove driveway 112. Property appears to have access to Sleepy Hollow Road.

Map 10 (Short-term recommendations)

- Porter Drive does not meet current intersection design standards and is recommended to be improved to the current standard for a Type B1 intersection if/when safety warrants. Recommendations include adding a bypass lane to the tee intersection.
- Look for opportunities to realign driveways 116 and 117 if safety/operations issues arise.
- Marina Lane does not meet current intersection design standards and is recommended to be improved to the current standard for a Type B1 intersection if/when safety warrants. Recommendations include adding a bypass lane to the tee intersection.
- Majestic Circle does not meet current intersection design standards and is recommended to be improved to the current standard for a Type B1 intersection if/when safety warrants. Recommendations include adding a bypass lane to the tee intersection; driveway 120 may be too close to construct the bypass lane.
- Realign driveway 120 with Majestic Circle if safety/operations issues arise, or if Majestic Circle is improved.
- Island Lane does not meet current intersection design standards and is recommended to be improved to the current standard for a Type B1 intersection if/when safety warrants. Recommendations include adding a bypass lane to the tee intersection.
- Airport Road does not meet current intersection design standards and is recommended to be improved to the current standard for a Type B1 intersection if/when safety warrants. Recommendations include adding a bypass lane to the tee intersection.
- Consolidate driveways 121, 122, and 123. All three driveways appear to access the same property.
- Meadow Drive does not meet current intersection design standards and is recommended to be improved to the current standard for a Type B1 intersection if/when safety warrants. Recommendations include adding a westbound right-turn lane and an eastbound bypass lane to the tee intersection.
- Consider a joint access agreement between driveways 127 and 128.
- County A does not meet current intersection design standards and is recommended to be improved to the current standard for a Type B1 intersection if/when safety warrants. Recommendations include adding an eastbound left-turn lane and a westbound right-turn lane to the tee intersection.

Map 11 (Long-term recommendations)

- If safety or operations warrant, consider realignment of US 12 to create a service road system reducing local road accesses from ten intersections to five, and private driveways from 24 to eight. Park Road, Sleepy Hollow Road, Cedar Road, Majestic Circle, and Airport Road would maintain access to US 12. Intersections would be improved to include right- and left-turn lanes and bypass lanes where appropriate. The remaining local roads would access US 12 via a service road system as shown on Exhibit 11, Map 11.
- Consolidate driveways 121, 122, and 123. All three driveways appear to access the same property.

Map 12

- Brosig Lane does not meet current intersection design standards and is recommended to be improved to the current standard for a Type B1 intersection if/when safety warrants. Recommendations include adding a bypass lane to the tee intersection; however, driveway 131 may be too close to the intersection for construction of a bypass lane.
- Remove driveway 133 as the agricultural field appears to have two driveways.
- Langhoff Lane does not meet current intersection design standards and is recommended to be improved to the current standard for a Type B1 intersection if/when safety warrants.
- If the land use changes, relocate driveway 136 to Langhoff Lane.
- If safety/operations warrant, remove driveways 140 – 146 and provide access via a new connection to Oakland Road.
- Oakland Road does not meet current intersection design standards and is recommended to be improved to the current standard for a Type B1 intersection if/when safety warrants.

Map 13

- Remove driveway 151. Property appears to have two access locations.
- Consider a joint access agreement between driveways 152 and 153.
- Oestreich Lane does not meet current intersection design standards and is recommended to be improved to the current standard for a Type B1 intersection if/when safety warrants.
- Consider a joint access agreement between driveways 154 and 155.
- Trieloff Road does not meet current intersection design standards and is recommended to be improved to the current standard for a Type B1 intersection if/when safety warrants. Recommendations include adding a bypass lane to the tee intersection; however, driveways 154 and 155 may be too close to the intersection for construction of a bypass lane.
- Ehrke Road does not meet current intersection design standards and is recommended to be improved to the current standard for a Type B1 intersection if/when safety warrants. Recommendations include adding a bypass lane to the tee intersection; however, driveway 158 may be too close to the intersection for construction of a bypass lane.

Map 14

- Driveway 159 was not a permitted driveway in the 84.25 Access Control Map.
- Look for opportunities to consolidate driveways 160 and 162. Driveway 162 was not permitted in its current location on the 84.25 Access Control Map.
- County J does not meet current intersection design standards and is recommended to be improved to the current standard for a Type B1 intersection if/when safety warrants. Recommendations include adding right and left-turn lanes for both US 12 approaches.
- Relocate driveway 164 to County J. The driveway is too close to the County J intersection and experiences high seasonal traffic.
- Look for opportunities to consolidate driveways 167, 169, 170, and 173 and driveways 166, 168, 169.1, 171, and 172. Consider joint access agreements if feasible.
- Remove driveway 175. Driveways 175 and 176 appear to access the same property.

- Driveway 176.1 was not permitted on the 84.25 Access Control Map.

Map 15

- Look for opportunities to relocate driveway 179 to County G.
- Consider a joint access agreement between driveways 180 and 181.
- County G does not meet current intersection design standards and is recommended to be improved to the current standard for a Type A2 intersection if/when safety warrants. Recommendations include adding left-turn and right-turn lanes for the US 12 approaches.
- Look for opportunities to relocate driveway 182 to County G.
- Remove driveway 184; it appears to access the same property as driveway 187.
- Consider a joint access agreement between driveways 185 and 186.
- Remove driveway 190; it appears to access the same property as driveway 188.
- If safety/operations issues arise, relocate driveway 191 to Radloff Lane.
- Radloff Lane does not meet current intersection design standards and is recommended to be improved to the current standard for a Type B1 intersection if/when safety warrants. Recommendations include adding a bypass lane to the tee intersection.

Map 16

- Remove driveway 198. Property appears to have access to Hoard Road.
- County C/Hoard Road does not meet current intersection design standards and is recommended to be improved to the current standard for a Type A2 intersection if/when safety warrants. Recommendations include adding left and right-turn lanes for both US 12 approaches.
- If land use changes between County C/Hoard Road and the WIS 26 interchange as identified in the Fort Atkinson Comprehensive Plan, a local road system should service the businesses and residences along US 12. The local road system should not directly access US 12, instead accessing County C/Hoard Road. Driveways 198 – 208 would be relocated to access the new roadway system.

3.0 Other Strategies Considered

Encroachments

Encroachments within the US 12 study corridor have been inventoried and are listed in table 47 on the next page. FDM Procedure 12-1-20, Encroachments on Highway Improvement Projects, indicates that encroachments are not to be allowed within state highway right-of-way, except in those cases, typically in urban areas, when a revocable permit may be issued. State statutes direct WisDOT to "maintain the highway right-of-way free and clear of encroachments, particularly those in rural areas." According to section 3.2 of FDM 12-1-20:

> In exceptional cases only, a permit may be issued and the encroachment allowed to remain if all the following criteria are met:
>
> - The encroachment will not impair the highway function or interfere with the free and safe flow of traffic.
> - The encroachment is of a permanent nature or is actively used and properly maintained.
> - It does not conflict with the broader public interest.

Priorities for encroachment removal could be based on whether an encroachment lies within the highway clear zone. FDM Procedure 11-15-1, Clear Zone Distance Tables & Recovery Area Width Determination, specifies standards for clear zone distances for different design speeds and slopes within the clear zone. For state highways with traffic volumes greater than 6,000 ADT, the recommended clear zone is 30 feet in flat zones, more than 30 feet in zones with foreslopes, and less than 30 feet in zones with backslopes. The base clear zone distance for 45–50 mph design speeds is 20 feet in flat zones. Therefore, encroachments in the rural corridor segments (55 mph posted speed) within 30 feet of travel lanes should be considered for removal; encroachments in semi-urban and urbanizing segments with 35 and 45 mph posted speed limits (near Cambridge) within 20 feet of travel lanes should be evaluated for removal. This report recommends removing all encroachments listed in table 47. The table also indicates the posted speed limits along US 12 for the encroachment locations.

Table 47 Encroachments in the US 12 right of way

Location	Description
662 US 12/18, Town of Christiana	Stone decorative gateways
300 US 12/18, Town of Christiana	Parked cars in salvage yard
412 W Main St, Cambridge	Commercial sign, ground mounted: "Subway, etc"
279 W Main St, Cambridge	Commercial sign, ground mounted: "BP"
102 N Pleasant St, Cambridge	Stone landscaping retaining wall
219 W Main St, Cambridge	Sign mounted on commercial building
214 W Main St, Cambridge	Awning & sign mounted on commercial building: "Rowe Pottery", "The Grind"
206 W Main St, Cambridge	Awning mounted on commercial building: "Keystone Grill"
152 W Main St, Cambridge	Sign mounted on commercial building: "Rumpf Law Offices"
149 W Main St, Cambridge	Awning & sign mounted on commercial building "Koshkonong Galleries"
148 W Main St, Cambridge	Awning mounted on commercial building: "Rover Makeovers"
146 W Main St, Cambridge	Wood steps attached to commercial building
136 W Main St, Cambridge	Awning mounted on commercial building
130 W Main St, Cambridge	Awning mounted on commercial building:"Katy's Corner"
128 W Main St, Cambridge	Awning & sign mounted on commercial building: "Cambridge Jewelry"
109 W Main St, Cambridge	Awning mounted on commercial building
102 W Main St, Cambridge	Commercial sign, ground mounted: "Badger Bank"
101 W Main St, Cambridge	Awning mounted on commercial building: " The Wood Shed"
110 E Main St, Cambridge	Signs mounted on commercial building: "Kurt's Place"
W9652 US 12, Town of Oakland	Timbered retaining wall
W9644 US 12, Town of Oakland	Portable variable message sign: "Lake Ripley Family Restaurant"
W9460 US 12, Town of Oakland	Message sign, ground mounted: "Faith Evangelical Lutheran Church"
W9368 US 12, Town of Oakland	Landscaping stones and wooden fence
W8546 US 12, Town of Oakland	Portable variable message sign: "Kranky's Pub & Grill"
N3525 US 12, Town of Oakland	Stone decorative gateways at Oestreich Lane housing park
W7545 US 12, Town of Oakland	Sign and stone planter: "Awesome Acres"

Color codes correspond to posted speed limits: 55 mph, 45 mph, 35 mph, 25 mph

Speed Zones

The Interactive Highway Safety Design Model (IHSDM) review identified the sudden change in the posted speed limit on US 12 just west of Cambridge (between Kenseth Way and WIS 134) as a cause for vehicles exceeding the speed limit by 6 – 12 mph at that location. Eastbound vehicles experience speed limit reductions from 55 mph to 45 mph to 25 mph within a short distance between Kenseth Way and WIS 134 (the 45 mph speed zone is only 0.3-mile long). This speed zone environment could challenge driver expectations and thus create an unsafe condition for vehicles entering and exiting US 12 at the public side roads and private driveways on the west side of Cambridge. This area should be further studied to determine if additional issues exist within this area.

Intersection Sight Distance

Some public intersections along US 12 might have inadequate sight distance from the stop bar. FDM Procedure 11-10-5 Attachment 1, Sight Distance Criteria, specifies stopping sight distance for various design speeds. Stopping sight distance is 570 feet at 60 mph. Members of the public have identified intersections that have vegetation, buildings, guardrail, and/or earth mounds that interfere with visibility of traffic on US 12. In addition, observations were also made along US 12 to

verify the presence of obstructions at intersections. The presence of vertical or horizontal curves might also contribute to visibility problems at these intersections. Intersections that have been identified as having possible visibility problems include (see also figures 20, 25 and 26):

- County BN/Nora Road
- County B
- County G
- County C/Hoard Road

Long-term improvements to the intersections should ensure adequate visibility of US 12 from the side roads.

Shoulder Paving

The width of shoulder paving on the US 12 corridor differs on the rural segments of the highway. On the two-lane segments west of Cambridge the width of paved shoulder is three feet; east of Cambridge (Sleepy Hollow Road), the width of paved shoulder is eight feet. Paved shoulder width standards for state highways are specified in FDM Procedure 11-15-1, Attachment 5, Rural State Trunk Highway Paved Shoulder Width Requirements. For two-lane state highways with traffic volume greater than 3,500 AADT (design class A2), the specified paved shoulder width is three feet.

Shoulders and shoulder paving are addressed in FDM Procedure 11-15-1, Dimensions and Design Classes. According to section 4.1, Shoulder Paving Policy, "continuity of shoulder paving between logical termini is desirable." If WisDOT believes that a consistent shoulder is desirable on US 12 between Madison and Fort Atkinson, creating a consistent paved shoulder could be justifiable in conjunction with another nearby paving or reconstruction project. Full-width shoulder paving might also be desirable in areas where "closely-spaced driveways and/or frequent turning movements cause unpaved shoulders to require excessive maintenance." Farm vehicles frequently ride on the shoulders due to high traffic speeds and volumes on US 12. Full-width paving would improve safety and reduce shoulder erosion caused by these vehicles.

The US 12 corridor is not currently identified as a recommended or suitable bicycle route in the bicycle plans of either Dane County or Jefferson County, nor is there significant bicycle traffic present on the highway shoulder in rural areas (bicycle traffic volume on rural segments of US 12 is less than 2 ADT). On rural state trunk highways with traffic volumes greater than 3,500 ADT, the *Wisconsin Bicycle Facility Design Handbook* recommends a minimum 4-foot paved shoulder width when bicycle traffic is less than 25 per day (ADT), and a 5-foot paved shoulder width when bicycle volume is at least 25 bicycles per day (ADT). In the event of a reconstruction project, Wisconsin's Complete Streets law would be relevant to determining whether bicycle facilities should be included in the US 12 right of way.

Schuster's Playtime Farm Study

Schuster's Playtime Farm is an agricultural business located along US 12 within the town of Cottage Grove. The Schuster Farm attracts visitors from the surrounding area during the fall harvest season. At times the amount of traffic destined to or departing the Schuster Farm can reach 1,000 vehicles per day. The shoulders along US 12 experience heavy use because of the high volumes of turning

vehicles during the fall harvest season when Schuster's Playtime Farm is open to the general public. A special study was conducted to identify alternatives to improve safety and corridor operations along US 12 in the area near Schuster's Playtime Farm. A technical memorandum was prepared for WisDOT which contains six conceptual options that would improve safety and operations within the Schuster Farm Area. In 2013, shoulders were paved near the business and the driveway was relocated directly across from John Deere Lane. Figure 29 shows an alternative that consists of closing Schuster's existing driveway and creating a service road from Thorstad Lane to access their property.

Figure 29 Schuster Farm access improvement alternative

Park-and-Ride Facilities

Park-and-ride facilities are an important component of the state's transportation infrastructure, especially in large metropolitan regions such as Milwaukee and Madison. The *District 1 Park-and-Ride System Plan* (1999) identified two general locations along the US 12 corridor for future park-and-ride facilities: Cambridge and Fort Atkinson. A location at the US 12/WIS 134 intersection in Cambridge is identified as Tier I in the plan. Considering the growth in work commuting since 1999 between these communities and the Madison-area job centers, it is possible that these locations are even stronger candidates for park-and-ride lot locations today. Ideal locations for park-and-ride lots in Cambridge and Fort Atkinson would be on the west sides of these communities on or near US 12.

Deerfield has also experienced growth since the 1999 plan was produced and could also be a candidate for a future park-and-ride lot serving commuters. According to plat maps, a parcel at the northwest corner of the existing US 12/WIS 73 (north) intersection has been reserved for a park-and-ride lot or other transportation use. As part of the preferred alternative identified in the WIS 73/US 12/18 Intersection Reconstruction Project (EA), a potential site for a future park-and-ride lot has been identified in the area of Shaul Lane that would be vacated as part of implementation. A survey of local governments and vanpool and carpool users could be helpful in determining whether a park-and-ride lot would be an effective investment at this location. A separate Southwest Region-wide study of potential park-and-ride/pool sites was ongoing at the conclusion of this study.

Appendices

Appendix A Safety Analysis Report
Appendix B WisDOT Wetlands Mitigation Policy
Appendix C Public and Agency Comments
Appendix D Agriculture Operations Survey Report
Appendix E Threatened and Endangered Species
Appendix F US 12 Rural Intersection and Private Access Spacing
Appendix G Bicycle, Snowmobile, and Other Recreational Maps
Appendix H Traffic Operations Data
Appendix I Drainage Outlets and Structures Inventory
Appendix J Land Use Maps
Appendix K Digital Appendix

Appendix A Safety Analysis Report

Safety Analysis Report
For
US 12 Safety and Operational Analyses, Corridor and Access Management Study

Project ID 3080-00-09
County N to WIS 26
Cottage Grove to Fort Atkinson
Dane and Jefferson Counties, WI

Introduction and Methodology

TranSmart Technologies, Inc. conducted a safety analysis as part of the *US 12 Safety and Operation Analyses, Corridor and Access Management Study*. The study area is located along the US 12 corridor between County N (in the town of Cottage Grove, Dane County) and WIS 26 (in the city of Fort Atkinson, Jefferson County) and includes the area on both sides of US 12 within one mile of the highway. The overall goals of the study are to collect data related to the corridor, define existing operational deficiencies, determine future corridor needs, and develop options to preserve the function and safety of the highway. The information collected for this report will be used throughout the study process to develop strategies and recommendations. The design of proposed intersection and/or segment improvements will focus on reducing crashes overall, including the types of crashes outlined in this report.

Within the study area, US 12 is a two-lane highway with the exception of two short four-lane divided segments adjacent to the County N and WIS 26 interchanges. The corridor is 19.3 miles long and passes through the village of Cambridge. A small portion lies within the city of Fort Atkinson.

Average Annual Daily Traffic (AADT) volumes along the US 12 corridor range from 6,200 (between Cambridge and Fort Atkinson) to 13,500 (at WIS 73) with an average corridor-wide AADT of 9,100 vehicles. Intersections and interchanges along the corridor experienced between 6,200 and 15,600 entering vehicles. Where AADT values were not available, a value of zero was used for entering volumes from low volume rural side roads. This results in a conservative crash rate for the intersection as a higher number of entering vehicles results in a lower crash rate.

This report summarizes the project's crash analysis. Crash data for the corridor for the five-year period from 2005 through 2009 was provided by the Wisconsin Department of Transportation (WisDOT). The corridor was divided into five segments (see figure 1): four rural segments and one urban segment that includes Cambridge. Segmentation has been determined by WisDOT Meta-manager roadway classifications and the needs of traffic operations analysis (as determined by traffic volumes and speed zones within the corridor). The segments are described as follows:

- Segment AB—Located between County N and the intersection with WIS 73 (south leg). This is a 7.0-mile long rural segment with a posted speed limit of 55 mph and no signalized intersections. It includes the operational areas of both WIS 73 intersections. About ¾-mile of US 12 east of County N is four-lane divided highway (sub segment A), while the remainder of Segment AB is two-lane (sub segment B).
- Segment C—Located between WIS 73 (south leg) and the intersection with US 18/Jefferson Street in Cambridge, this 2.7-mile rural segment includes several driveways. The posted speed limit is 55 mph for the majority of this segment.
- Segment D—Located between US 18/Jefferson Street and Park Road, this 1.2-mile urban segment includes the village of Cambridge and part of the unincorporated urban service area adjacent to Lake Ripley. It has no signalized intersections and 25 and 35 mph posted speed zones.

- Segment E—Located between Park Road and County J, this 5.3-mile rural segment transitions from semi-urbanized to agricultural zones. The posted speed limit is 45 mph and 55 mph within this segment.
- Segment FG—Located between County J and WIS 26 at the city of Fort Atkinson, this is a 3.1-mile rural segment with a posted speed limit of 55 mph. There are no signalized intersections on this segment. About ½-mile of US 12 near WIS 26 is four-lane divided highway (sub segment G); the remainder of Segment FG is two-lane (sub segment F).

Figure 1 US 12 segments for crash analysis

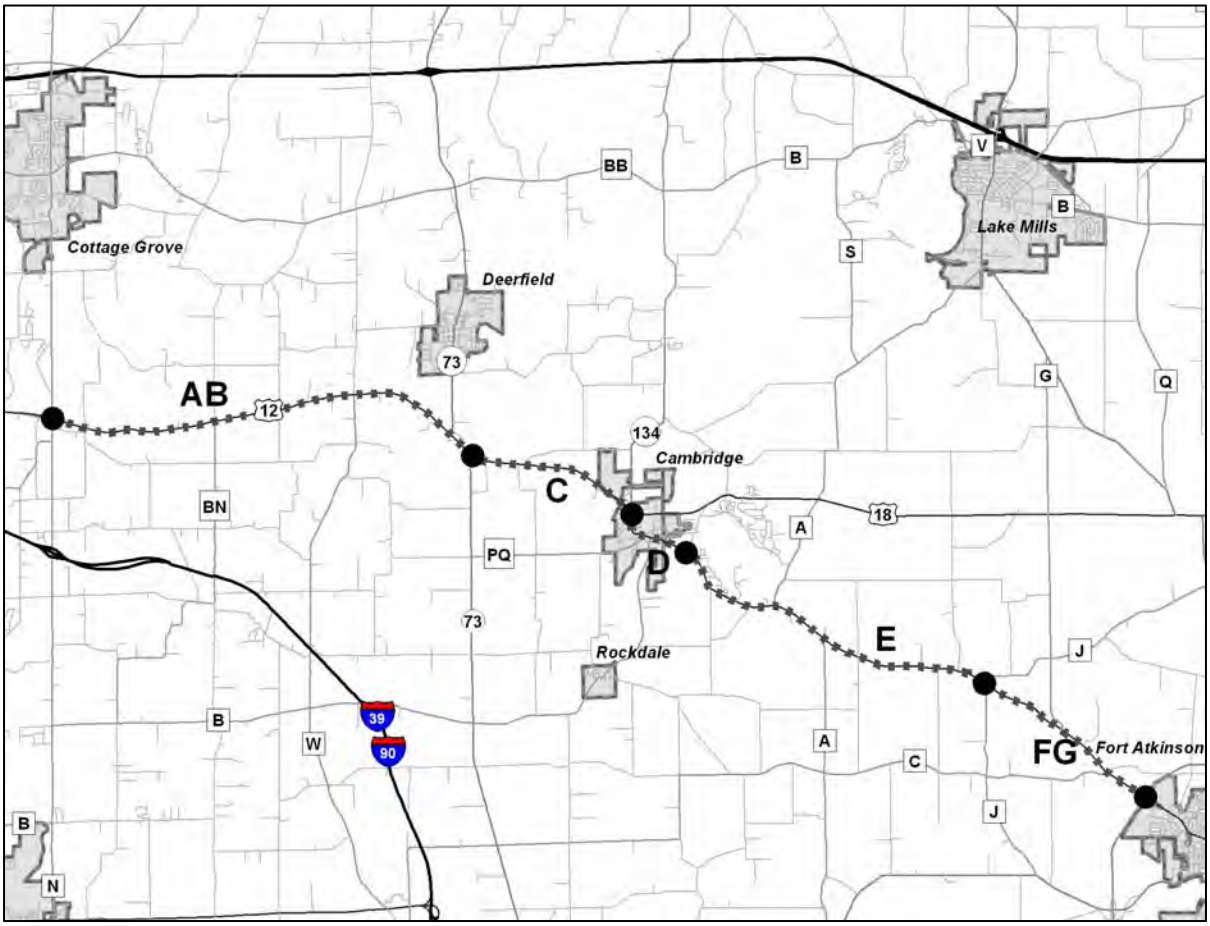

Crash rates were calculated for each of the segments and for all of the intersections within the corridor. A five-year crash analysis was performed for crashes occurring between 2005 and 2009. The crash rates generated from the analysis were compared to statewide averages for similar highway segments (among the 12 Meta-manager functional state trunk highway groups) over the same period of time.

While the majority of the study corridor is classified as rural state highway, the traffic conditions for Segment D within and near Cambridge more closely resemble those of an urban state highway. Within this segment, the posted speed limit is 25 or 35 mph and there is cross traffic from numerous local road and private driveway intersections. These conditions result in differences in both the number and types of crashes. For this reason, it is not possible to compare the crash rate for the entire highway corridor to a single statewide rate. Instead, Segment D is compared to the statewide rates for functional group 12

roadway (state highways in communities of fewer than 5,000 people), which includes urban state highways, and the rural segments are compared with the rates for rural state highways.

In addition to crash rates, the types and severity of crashes and the factors that contributed to crashes were analyzed to determine if there were patterns that indicated possible safety issues as a result of the existing geometry of the highway or intersections.

Corridor Crash Rates

A total of 241 non-deer crashes occurred within the study area in the five-year period between 2005 and 2009. Intersection-related crashes accounted for 90 (37 percent) of the total non-deer crashes as shown in table 1 below.

Table 1 US 12 segment and intersection crash totals

	Total Crashes		Non-Intersection Crashes			
Segment	**With Deer**	**w/out Deer**	**With Deer**	**w/out Deer**	**Intersection Crashes**	**Deer Crashes**
AB—County N to WIS 73	155	107	118	70	35	48
C—WIS 73 to US 18/Jefferson St	112	28	108	24	4	84
D—US 18 to Park Rd	47	47	21	21	25	0
E—Park Rd to County J	70	29	61	20	13	41
FG—County J to WIS 26	56	30	43	17	13	26
Entire Corridor	440	241	350	151	90	199

Of the total crashes, 283 (64.3%) were single vehicle non-collision type crashes including 199 (45.2%) crashes that involved collisions with deer.

Table 2 below shows US 12 segment crash data and rates (per 100 million vehicle miles). Segment AB experienced four fatal crashes and Segment C experienced one fatal crash; both segments had fatal crash rates above the state rate for their functional peer group (rural state highway with ADT greater than 8,700), while only Segment D had a crash rate and injury crash rate above the statewide average for its functional peer group (state highway in communities of fewer than 5,000 people). Segment rates above statewide rates are noted with bold type.

Table 2 US 12 segment crash data (excluding deer crashes) and rates (per 100 million vehicle miles)

Segment	**Crashes**	**Crash Rate**	**State Crash Rate***	**Fatal Crashes**	**Fatal Crash Rate**	**State Fatal Crash Rate***	**Injury Crashes**	**Injury Crash Rate**	**State Injury Crash Rate***
AB—County N to WIS 73	107	73	87	4	**2.7**	1.1	40	27	32
C—WIS 73 to US 18/Jefferson St	28	60	87	1	**2.2**	1.1	10	22	32
D—US 18 to Park Rd	47	**215**	195	0	0.0	0.9	16	**73**	58
E—Park Rd to County J	29	48	76	0	0.0	1.3	15	25	33
FG—County J to WIS 26	30	65	76	0	0.0	1.3	5	11	33

*For the segment functional peer group, as determined by Meta-manager.

Intersection Crashes

There are 52 public road intersections within the corridor, 28 of which experienced crashes during the years studied. Crash rates for each of the intersections, as shown in table 3, are well below a crash rate of 1.5 per million entering vehicles, a threshold that is generally considered to indicate a potential safety issue that may require further evaluation. However, additional criteria such as how the crash rates of individual intersections within a corridor compare against each other and crash severity are also considered when evaluating intersection safety. Intersections with higher crash rates compared to others in a corridor and those with severity rates above 30 percent may also be candidates for further study.

Intersections at the County N interchange, County W/Oak Park Road, WIS 73 (north leg), WIS 73 South Leg and US 18/Jefferson Street were identified as having potential safety issues based on an initial analysis of the crash records. County W/Oak Park Road and US 18/Jefferson Street each experienced more than five crashes during the study period and had significant crash severity rates (50 and 43 percent, respectively), defined as more than thirty percent of the crashes at the intersection resulting in injury. Furthermore, comparing intersection crash rates can illuminate possible safety issues. County N, WIS 73 (north leg), US 18/Jefferson Street, and WIS 26 had the highest crash rates in the corridor.

The intersection of US 12 and County BN/Nora Road was evaluated as part of a special study. A fatality occurred at this intersection in summer 2011. Although crash history for this location did not warrant further study, a collision diagram (see map 2) and statistics sheet was created to further identify any potential problems.

The interchange at WIS 26 was not analyzed in greater detail because it is currently being reconstructed as part of the WIS 26 expansion project. The historical crash data reviewed would not reflect changes from the new road geometry, therefore it was omitted from the study.

Crash reports were analyzed for the interchange at County N and four US 12 intersections: at County BN/Nora Road, WIS 73 (north and south legs) and US 18. The interchange at County N experienced total of eleven crashes. Seven of these eleven crashes occurred at the intersection of the US 12 EB on/off ramps and County N. Of the seven crashes two were rear ends and five were angle. Four of the five angle crashes occurred when a vehicle was making a left turn from the US 12 east bound off ramp onto County N while they crashed with a vehicle traveling north bound on County N. Attached to this document is a statistics sheet and a crash diagram (see Map 1) of the County N interchange area. The County BN/Nora Road intersection experienced a total of seven crashes during the study period. The intersection statistics sheet and crash diagram attached to this document (see Map 2) shows there were two out of control vehicles that struck fixed objects, one overtake, one out of control vehicle, one rear-end, one head-on, and one angle crash. The head-on crash resulted in two fatalities. The WIS 73 (north leg) intersection experienced 18 crashes during the study period. There were five angle, six rear-end, and six single-vehicle crashes; one crash involved an automobile striking an emergency vehicle that was undertaking a u-turn. The intersection crash diagram (Maps 3 and 4, which can be found in the attached sheets) indicates that eastbound left-turning vehicles from WIS 73 to US 12 were involved in five collisions with US 12 traffic. Two of the rear-end crashes involved eastbound vehicles on US 12, three occurred in the WIS 73 right-turn lane, and one occurred in the WIS 73 left-turn lane. The south leg was

evaluated as part of the overall connection of WIS 73 to US 12, but only had four crashes over the period studied.

Fourteen total crashes occurred at the US 12/18 intersection in Cambridge during the study period (see Map 5). Six were angle crashes, six were rear-end, and one was a single-vehicle off-road crash. Three of the angle crashes occurred when left-turning eastbound vehicles from US 12 to US 18 collided with westbound US 12 vehicles. Five of the six rear-end crashes occurred in the US 18 to westbound US 12 right-turn lane.

Table 3 Intersection crash data

Intersection	Total Crashes	Estimated Entering Volume	Intersection Crash Rate	Severity
County N (@ EB ramps)	7	7,400	0.52	29%
North Star Road	2	10,400	0.11	0%
County BN/Nora Road	7	12,700	0.30	29%
Deerfield Road	0	10,600	0.00	0%
Thorstad Lane	1	10,600	0.05	0%
John Deere Lane	1	10,600	0.05	0%
County W/Oak Park Road	8	12,175	0.36	50%
Sunny Lane	1	11,500	0.05	0%
Nuland Road	1	11,500	0.05	0%
Mikkelson Farm Road	0	13,500	0.00	0%
WIS 73 (north leg)	18	15,400	0.64	33%
WIS 73 (south leg)	4	12,950	0.17	50%
Fadness Road	1	9,400	0.06	0%
Clear View Road	0	9,400	0.00	0%
State Farm Road	3	9,400	0.17	33%
Rodney Road	2	9,400	0.12	50%
Kenseth Way	0	9,400	0.00	0%
WIS 134	0	9,900	0.00	0%
US 18/Jefferson Street	14	12,700	0.60	43%
Pinecrest Drive	0	10,000	0.00	0%
Madison Street	6	10,000	0.33	0%
Pleasant Street	1	10,000	0.05	100%
Water Street/County PQ	6	9,100	0.36	17%
Mill Street	0	8,100	0.00	0%
Spring Street/County B	5	9,400	0.29	0%
Park Street	0	8,600	0.00	0%
Lawn Street	2	8,600	0.13	0%
High Street	1	8,600	0.06	100%
Simonson Street	0	9,000	0.00	0%
2nd Street	0	8,600	0.00	0%
Park Road	1	9,800	0.06	0%
Alpine Village Lane	3	6,200	0.27	33%
Golf Side Lane	0	6,200	0.00	0%
Sleepy Hollow Road	0	6,200	0.00	0%
Porter Drive	0	6,200	0.00	0%
Cedar Road	0	6,200	0.00	0%
Marina Lane	0	6,200	0.00	0%
Island Lane	1	6,200	0.09	100%
Airport Road	0	6,200	0.00	0%
Meadow Drive	0	6,200	0.00	0%
County A (North)	0	6,600	0.00	0%
Brosig Lane	0	6,200	0.00	0%
County A (South)	0	6,370	0.00	0%
Oakland Road	2	6,700	0.16	0%
Oestreich Lane	2	6,200	0.18	50%
Trieloff Road	2	6,200	0.18	100%
Ehrke Lane	0	6,200	0.00	0%
County J	0	6,630	0.00	0%
County G	0	10,000	0.00	0%
Radloff Lane	0	8,600	0.00	0%
County C/Hoard Road	6	9,100	0.36	17%
WIS 26*	11	9,750	0.62	9%

*Crashes not precisely located at specific interchange intersections or freeway ramps.

Crash Types

The types of crashes occurring on the five segments of the US 12 corridor are illustrated in the charts found in figure 2. The most common type of crash occurring on all of the rural segments analyzed was non-collision with other vehicles (deer crashes have been excluded). For the urban segment (Segment D), the most frequent type of crash was rear end followed by angle and non-collision crashes; a large majority of this segment's rear-end and angle crashes occurred at intersections.

Figure 2 Manner of collision for each segment

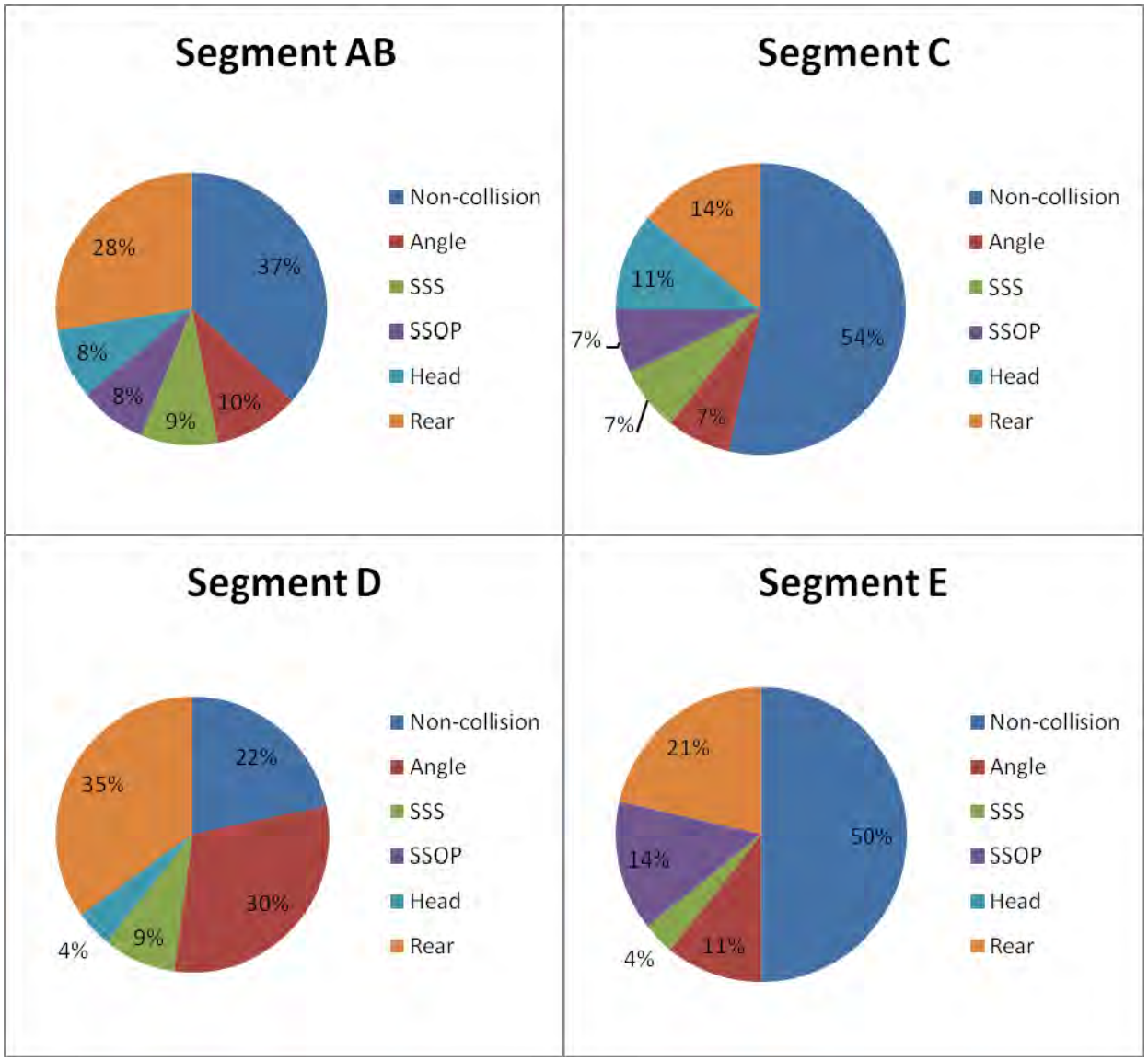

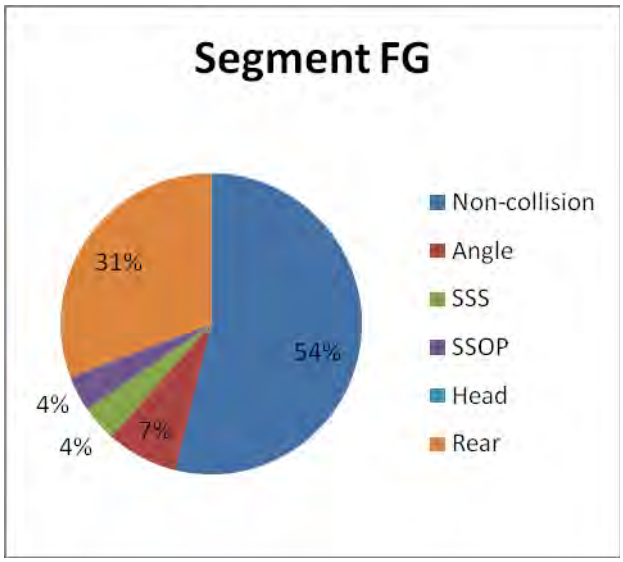

Crash Severity

Even though the majority of crashes on US 12 involved property damage only, several crashes involved injury for each of the segments (see figure 3 below). Please note that deer crashes have been excluded from crash severity calculations. Five fatal crashes occurred on the corridor. Segment E had the highest percentage of injury crashes at 52 percent. Segments AB and C had the second highest percentage of injury crashes (36%). Segment AB experienced four fatal crashes, three of which were head-on and one was an angle crash. Thirty-four percent of Segment D's crashes involved injuries, with half (50%) of the injury crashes occurring at intersections.

Figure 3 Crash severity for each segment

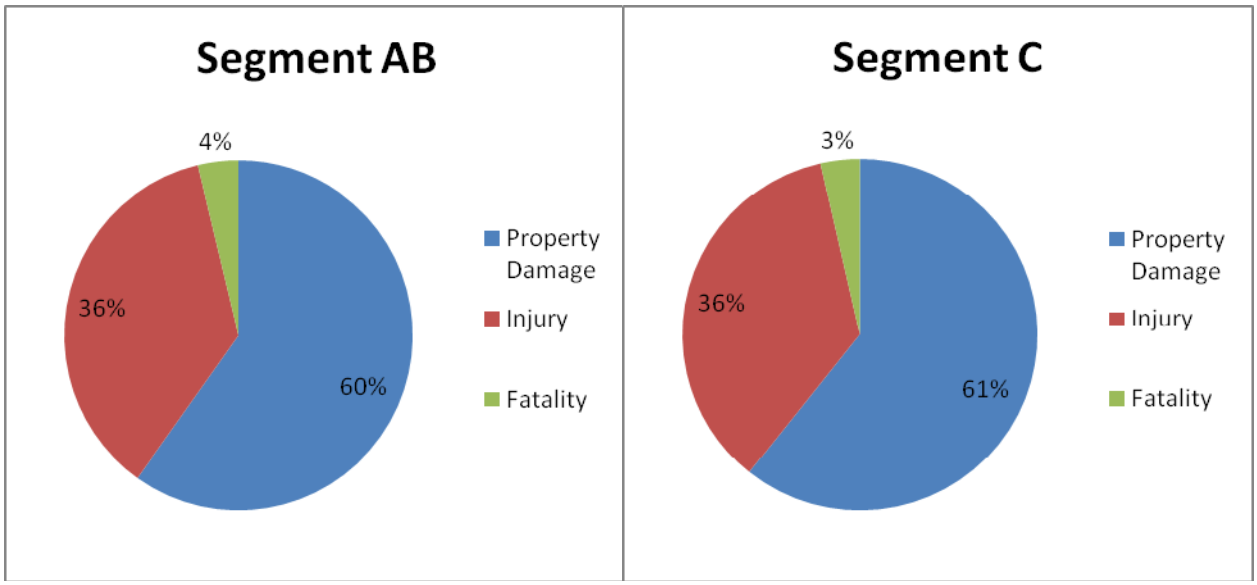

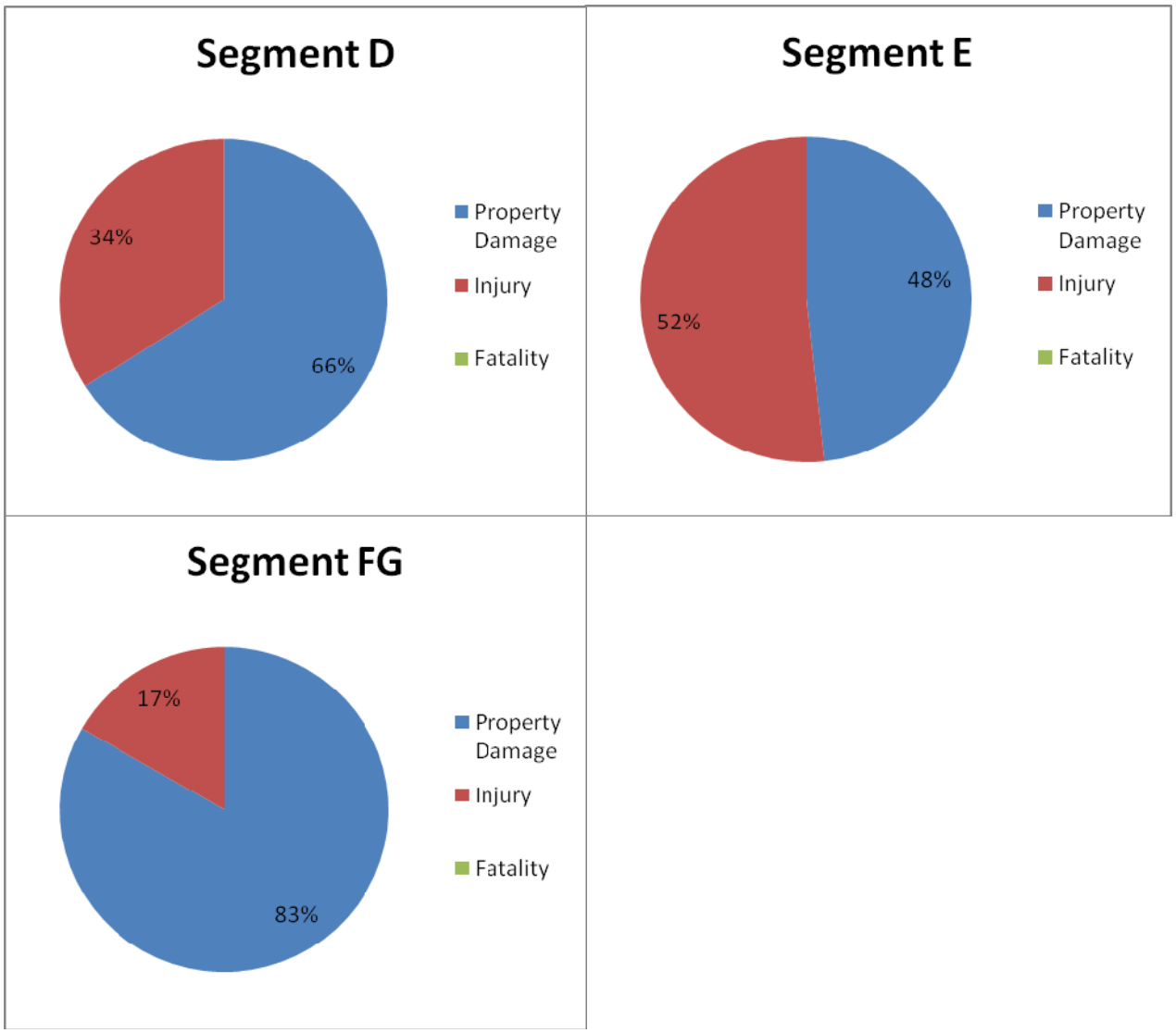

Injury Severity

WisDOT further records injury crashes by level of severity. Injury crashes within the corridor have been sorted into three subcategories as they are defined in the Law Enforcement Officer's Instruction Manual:

- **Type A: Incapacitating Injury**—Any injury other than a fatal injury, which prevents the injured person from walking, driving, or from performing other activities, which he/she performed before the accident.
- **Type B: Non-incapacitating Injury**—Any injury, other than fatal or incapacitating, which is evident at the scene. Evidence of injury may include known symptoms of an injury, which are not directly observable.

- **Type C: Possible Injury**—Any injury which is not observable or evident at the scene but is claimed by the individual or suspected by the law enforcement officer.
- **Type K: Fatality—**Any fatality that occurs as the result of the crash.

As can be seen by the charts in figure 4, Segment AB experienced the highest percentage of combined fatal and incapacitating injuries crashes at 25 percent, followed by Segment FG with 20 percent.

Figure 4 Crash injury severity

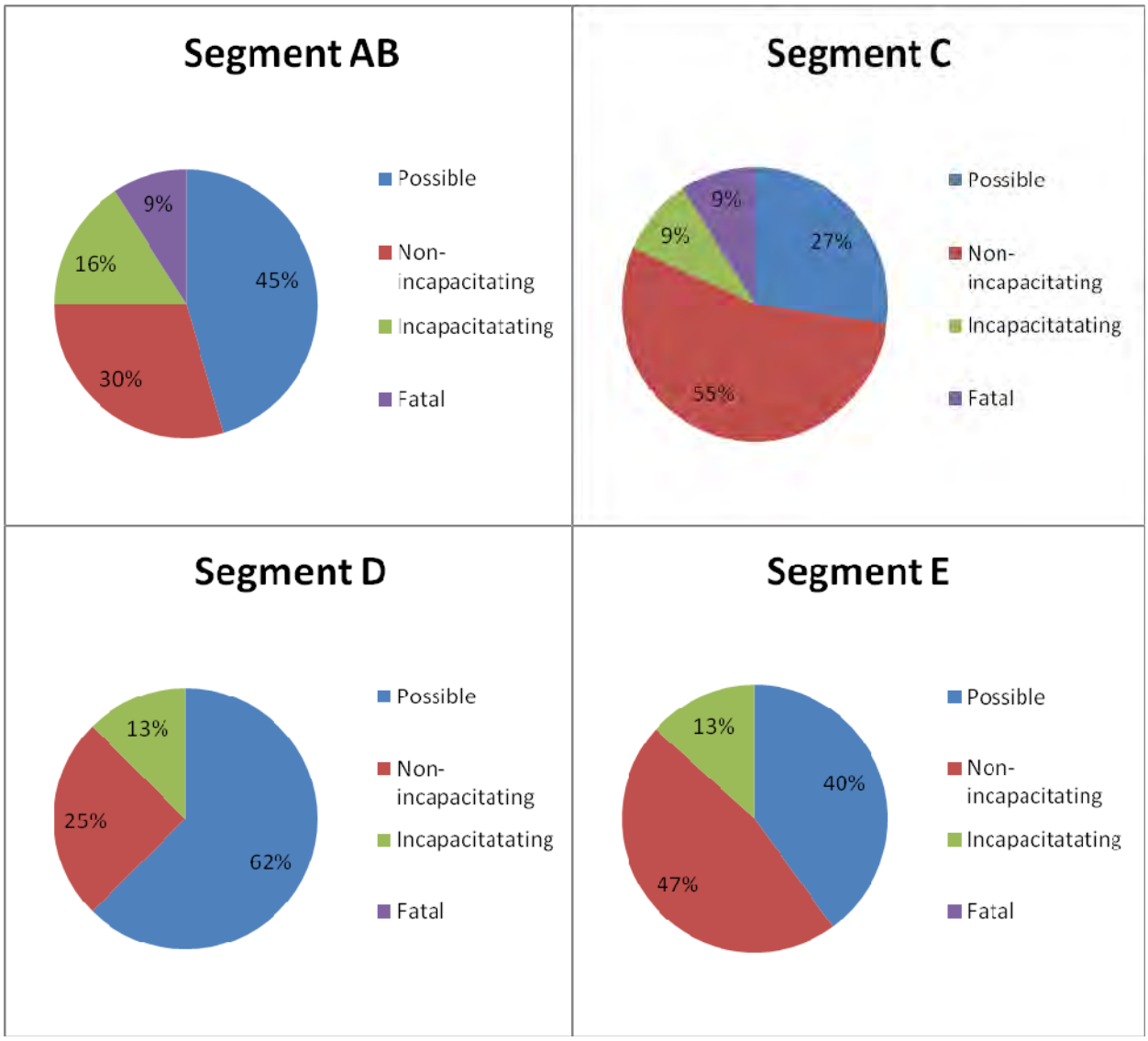

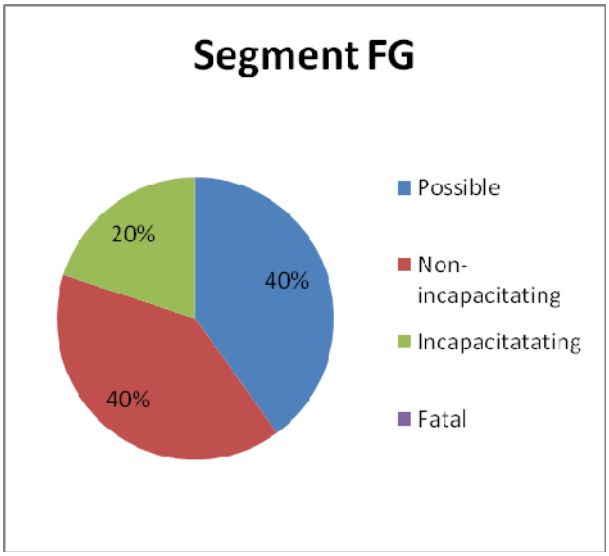

Table 4 below compares crash injury severity rates on US 12 with the statewide average rates for crash injury types A, B, C and fatal (K). As shown, segments AB and C have rates for fatal crashes above statewide average rates while Segment D experienced incapacitating injury (Type A) crashes at 9.1 per 100 million vehicle miles, above the statewide rate of 7.4. Segment D also had a Type C injury crash rate (45.7) above the statewide rate.

Table 4 Crash injury severity rates compared to statewide average rates

Segment	Type A		Type B		Type C		Fatal	
	US 12	Avg	US 12	Avg	US 12	Avg	US 12	Avg
AB—County N to WIS 73	4.8	4.9	8.8	11.4	13.6	15.8	**2.7**	1.1
C—WIS 73 to US 18/Jefferson St	2.2	4.9	13.0	11.4	6.5	15.8	**2.2**	1.1
D—US 18 to Park Rd	**9.1**	7.4	18.3	19.5	**45.7**	30.6	0.0	0.9
E—Park Rd to County J	3.3	5.4	11.7	11.2	10.0	12.3	0.0	1.3
FG—County J to WIS 26	2.2	5.4	4.3	11.2	4.3	12.3	0.0	1.3

Contributing Factors

Factors that contributed to the crashes are listed in table 5 below. Since some crashes included multiple factors, the data are not cumulative. Many of the crashes along US 12 did not have contributing factors. For those crashes where contributing factors were present, the involvement of deer was the most common factor contributing to crashes on the rural segments followed by road condition. Road condition was the most common contributing factor on Segment D, the only urban segment. Only one crash in the corridor was affected by construction.

Table 5 Contributing factors for crashes, amount and percent on each segment

		Deer Crashes		Road Condition		Alcohol		Construction	
Segment	**Total**	**Amt**	**Pct**	**Amt**	**Pct**	**Amt**	**Pct**	**Amt**	**Pct**
AB – County N to WIS 73	155	48	31	39	25	9	5.8	1	0.7
C – WIS 73 to US 18	112	84	75	9	8	3	2.7	0	0
D—US 18 to Park Rd	51	0	0	14	27	3	5.9	0	0
E—Park Rd to County J	66	41	62	11	17	3	4.5	0	0
FG – County J to WIS 26	56	26	46	12	21	1	1.8	0	0

Conclusion/Summary of Findings

Crash analysis was undertaken on the US 12 study corridor's five segments to identify locations where further investigation could be conducted. Five fatalities occurred in the corridor, one of which involved alcohol, while thirteen crashes involving incapacitating injuries occurred. Four of the fatalities resulted from head-on crashes, while one fatality resulted from an angle crash at an intersection. A total of 199 deer crashes occurred during the study period; Segment C experienced 84 and had by far the highest deer crash rate of all the segments. The intersections at WIS 73 and US 18 had the highest crash rates, while the County W/Oak Park Road intersection had the highest crash severity rate. The safety issues for each of these segments are summarized as follows.

Segment AB (County N to WIS 73) is categorized as a state highway functional group 11 roadway (rural highway with ADT above 8,700). It experienced 107 non-deer crashes and a crash rate of 73 during the 2005 to 2009 study period, which was below the statewide average crash rate of 87. Four fatal crashes occurred in the segment (one of which involved alcohol) yielding a fatal crash rate of 2.7, which is higher than the 1.1 statewide average rate. Three of the fatal crashes resulted from head-on collisions and one from an angle collision. Figure 5 below shows crash totals for the segment's intersections. The WIS 73 (north leg) intersection experienced a total of 18 crashes, the highest intersection total in the corridor (for more details, see Map 3 and the intersection crash statistics sheet in the attached pages). The intersection at County W/Oak Park Road experienced eight crashes and a crash severity rate of 50 percent. The intersection at County N and the US 12 and County N interchange experienced a total of 11 crashes, of these eleven seven occurred at County N and the East Bound ramps. The intersection had a total AADT of 7400 giving a crash rate of 0.52. US 12 and County BN/Nora Road experienced a total of seven crashes as well, one of which was a fatality. Segment AB experienced 48 deer crashes during the study period, yielding a deer crash rate of 33.

Figure 5 Segment AB intersection crashes

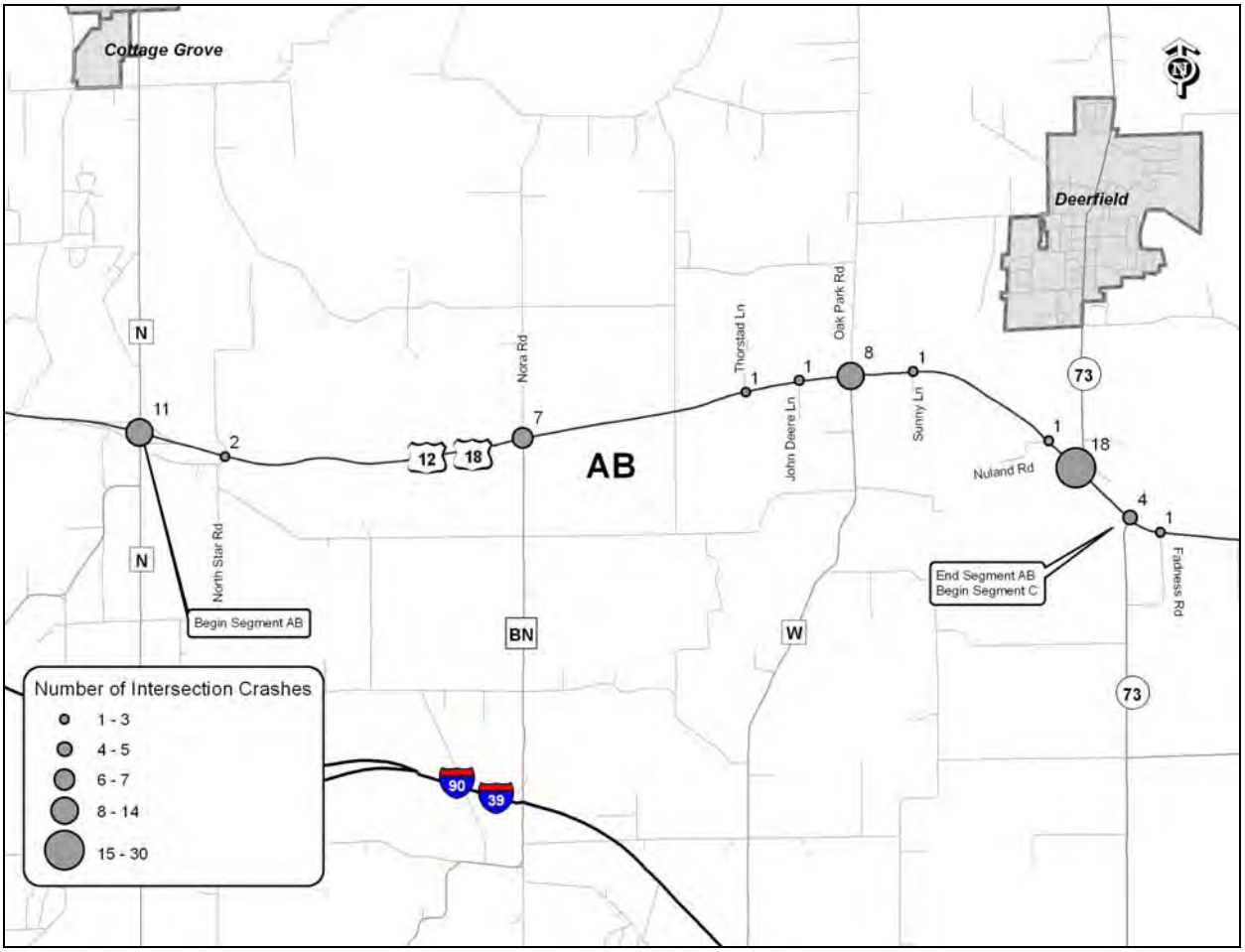

Segment C (WIS 73 to US 18/Jefferson Street) is categorized as a state functional group 11 roadway (rural state highway with ADT greater than 8,700). It experienced 28 non-deer crashes and a crash rate of 60, which is lower than the statewide average crash rate of 87 for its functional peer group. One fatal crash occurred on the segment yielding a fatal crash rate of 2.2, which is higher than the statewide average rate of 1.1. Figure 6 below shows the intersection crash totals for segments C and D. The intersection at US 18/Jefferson Street had 14 crashes and a crash rate of 0.60, one of the highest rates on the corridor (for more details, see Map 5 and the intersection crash statistics sheet in the attached pages). Segment C experienced 84 deer crashes during the study period, yielding a deer crash rate of 181, the highest in the corridor.

Figure 6 Segments C and D intersection crashes

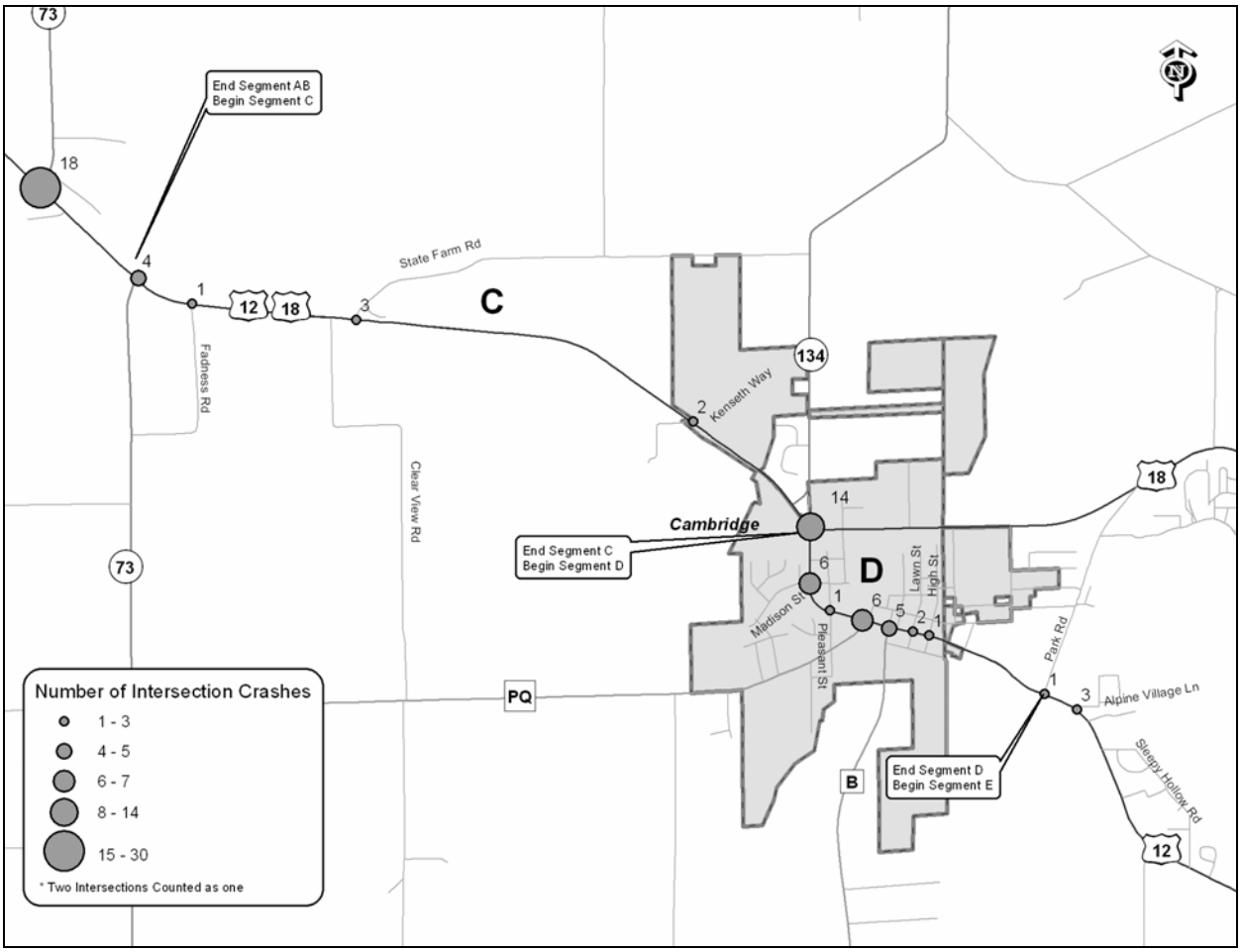

Segment D (US 18/Jefferson Street to Park Road), as seen in figure 6 above, is the only urban segment in the US 12 study corridor and is categorized as a state highway functional group 12 roadway (state highway within community of less than 5,000 population). It experienced 47 non-deer crashes and a crash rate of 215, which is higher than the statewide average rate of 195. The segment did not have any fatal crashes during the study period, and had 16 injury crashes and an injury crash rate of 73, which is higher than the statewide injury crash rate of 58. The intersection at US 18/Jefferson Street had 14

crashes, a crash rate of 0.60, and a 47 percent crash severity rate. Segment D did not experience any deer crashes during the study period.

Segment E (Park Road to County J), which can be seen in figure 7 below, is categorized as a state highway functional group 3 roadway (rural state highway with ADT between 3,500 and 8,700). It experienced 29 non-deer crashes and a crash rate of 48, which is below the statewide average rate of 76. The segment did not experience any fatal crashes during the study period, and had 15 injury crashes and an injury crash rate of 25, which is lower than the statewide average rate of 33. Segment E experienced 41 deer crashes during the study period, yielding a deer crash rate of 68.

Figure 7 Segments E and FG intersection crashes

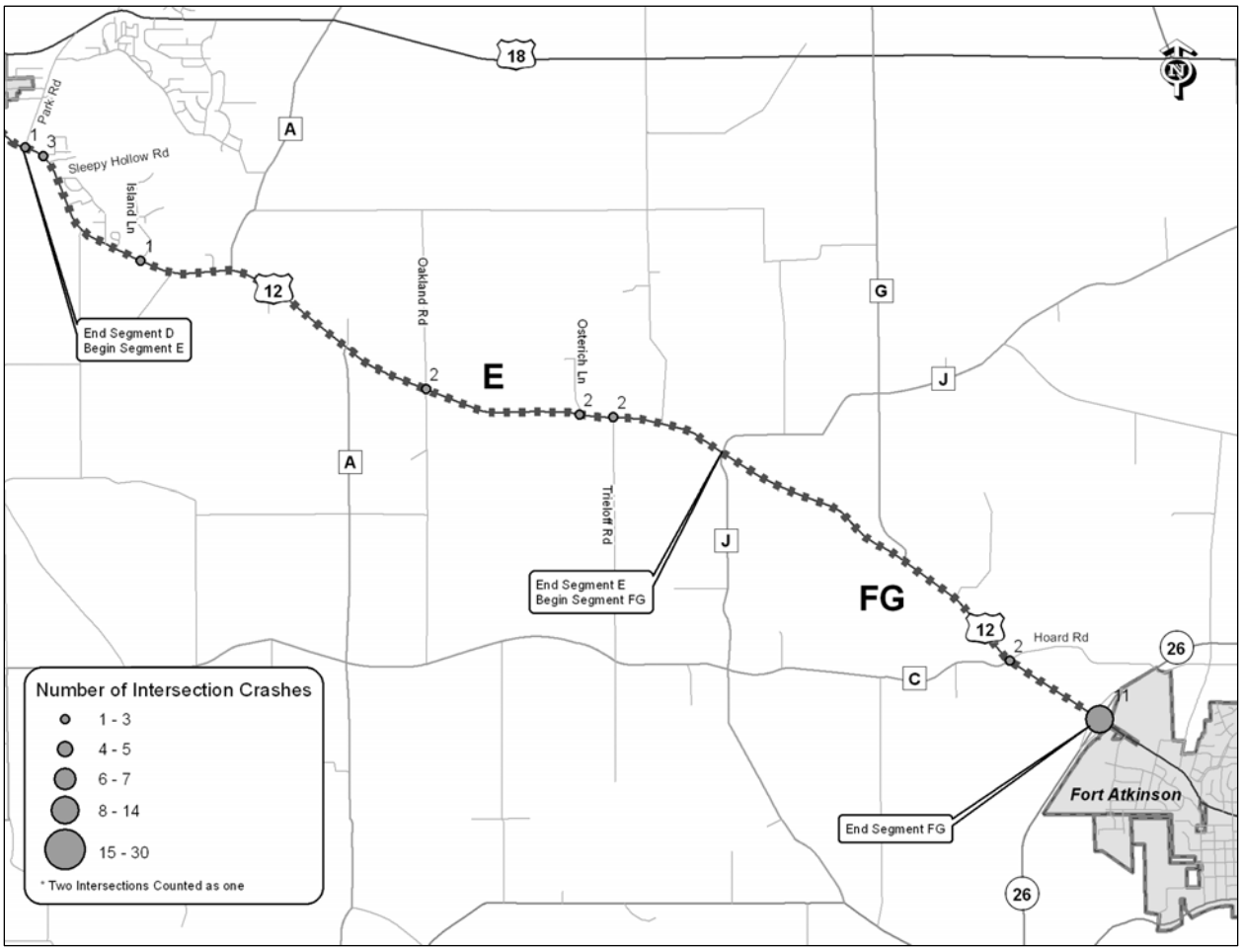

Segment FG (County J to WIS 26), which can be seen in figure 7 above, is categorized as a state highway functional group 3 roadway (rural state highway with ADT between 3,500 and 8,700). It experienced 30 non-deer crashes and a crash rate of 65, which is below the statewide average rate of 76. The segment did not experience any fatal crashes during the study period and had 5 injury crashes and an injury crash rate of 11, which is lower than the statewide average rate of 33. Segment FG experienced 26 deer crashes during the study period, yielding a deer crash rate of 56.

Map 1

County N Collision Diagram

US 12 Corridor Study

1 In = 200 Ft

TranSmart

Intersection Crash Statistics

TranSmart

Intersection:	US 12 & County N Interchange EB Ramp Intersection				
Municipality:	Town of Deerfield	County:	Dane	State:	WI
Period	2005 through 2009	Months From:	1/1/2005	To:	12/31/2009

Project ID:	3080-00-09	Date:	7/8/2011

Intersection Characteristics

Traffic Control:	2-way stop	Posted Speed Major:	55
Intersection AADT (2006):	7,400	Posted Speed Minor:	55
Number of Legs:	4		

Crash Statistics

Crash Frequency and Severity

Year	PDO	Injury	Fatal	Total
2005	1	1	0	2
2006	1	0	0	1
2007	1	1	0	2
2008	1	0	0	1
2009	1	0	0	1
Total	5	2	0	7
Percent	71.43%	28.57%	0.00%	100.00%
Year Avg.	1	0.4	0	1.4

Crash Rates

	per MEV
Crash Rate	0.52
Injury Crash Rate	0.15
Fatal Crash Rate	0.00

Light Conditions

		%
Day	7	100.0
Dark	0	0.0
Total	7	100.0

Road Conditions

		%
Dry	6	85.7%
Wet	1	14.3%
Snow	0	0.0%
Ice	0	0.0%
Other	0	0.0%
Total	7	100.0%

Crash Type

		%
Angle	5	71.4%
Rear-End	2	28.6%
Head-On	0	0.0%
SS-Same	0	0.0%
SS-Opposite	0	0.0%
Pedestrian	0	0.0%
Bicycle	0	0.0%
Fixed	0	0.0%
Not Fixed	0	0.0%
Deer	0	0.0%
Overturn	0	0.0%
Other	0	0.0%
Total	7	100.0%

Day and Time

Day of Week	Early Morning 12:00 AM to 5:59 AM	AM Peak 6:00 AM to 9:59 AM	Midday 10:00 AM to 2:59 PM	PM Peak 3:00 PM to 6:59 PM	Late Evening 7:00 PM to 11:59 PM	Total	
Monday	0	0	2	0	0	2	Weekday
Tuesday	0	0	0	0	0	0	
Wednesday	0	0	0	1	0	1	
Thursday	0	0	0	2	0	2	
Friday	0	0	0	1	0	1	
Saturday	0	1	0	0	0	1	Weekend
Sunday	0	0	0	0	0	0	
Total	0	1	2	4	0	7	

Vehicle Types*

		%
Car	14	100%
Truck	0	0%
Other	0	0%
Total	14	100%

*Total number of vehicles involved

By Season

		%
Spring	3	43%
Summer	3	43%
Fall	1	14%
Winter	0	0%
Total	7	100%

Map 2

County BN/Nora Road Collision Diagram

US 12 Corridor Study

1 In = 100 Ft

TranSmart

Intersection Crash Statistics

TranSmart

Intersection:	US 12 & County BN/Nora Road				
Municipality:	Town of Cottage Grove	County:	Dane	State:	WI
Period	2005 through 2009	Months From:	1/1/2005	To:	12/31/2009

Project ID:	3080-00-09	Date:	7/8/2011

Intersection Characteristics

Traffic Control:	2-way stop	Posted Speed Major:	55
Intersection AADT (2009):	12,700	Posted Speed Minor:	55
Number of Legs:	4		

Crash Statistics

Crash Frequency and Severity

Year	PDO	Injury	Fatal	Total
2005	1	1	0	2
2006	1	0	0	1
2007	2	0	1	3
2008	0	0	0	0
2009	1	0	0	1
Total	5	1	1	7
Percent	71.43%	14.29%	14.29%	100.00%
Year Avg.	1	0.2	0.2	1.4

Crash Rates	per MEV
Crash Rate	0.30
Injury Crash Rate	0.04
Fatal Crash Rate	0.01

Light Conditions		%
Day	5	71.4
Dark	2	28.6
Total	7	100.0

Road Conditions		%
Dry	6	85.7%
Wet	0	0.0%
Snow	1	14.3%
Ice	0	0.0%
Other	0	0.0%
Total	7	100.0%

Crash Type		%
Angle	1	14.3%
Rear-End	1	14.3%
Head-On	1	14.3%
SS-Same	0	0.0%
SS-Opposite	0	0.0%
Pedestrian	0	0.0%
Bicycle	0	0.0%
Fixed	2	28.6%
Not Fixed	0	0.0%
Deer	0	0.0%
Overturn	0	0.0%
Other	2	28.6%
Total	7	100.0%

Day and Time

Day of Week	Early Morning 12:00 AM to 5:59 AM	AM Peak 6:00 AM to 9:59 AM	Midday 10:00 AM to 2:59 PM	PM Peak 3:00 PM to 6:59 PM	Late Evening 7:00 PM to 11:59 PM	Total	
Monday	0	0	0	0	0	0	Weekday
Tuesday	0	0	1	0	0	1	
Wednesday	0	0	0	0	0	0	
Thursday	0	1	1	1	0	3	
Friday	0	0	0	1	0	1	
Saturday	0	0	0	1	0	1	Weekend
Sunday	0	0	1	0	0	1	
Total	0	1	3	3	0	7	

Vehicle Types*		%
Car	10	91%
Truck	1	9%
Other	0	0%
Total	11	100%

*Total number of vehicles involved

By Season		%
Spring	3	43%
Summer	1	14%
Fall	1	14%
Winter	2	29%
Total	7	100%

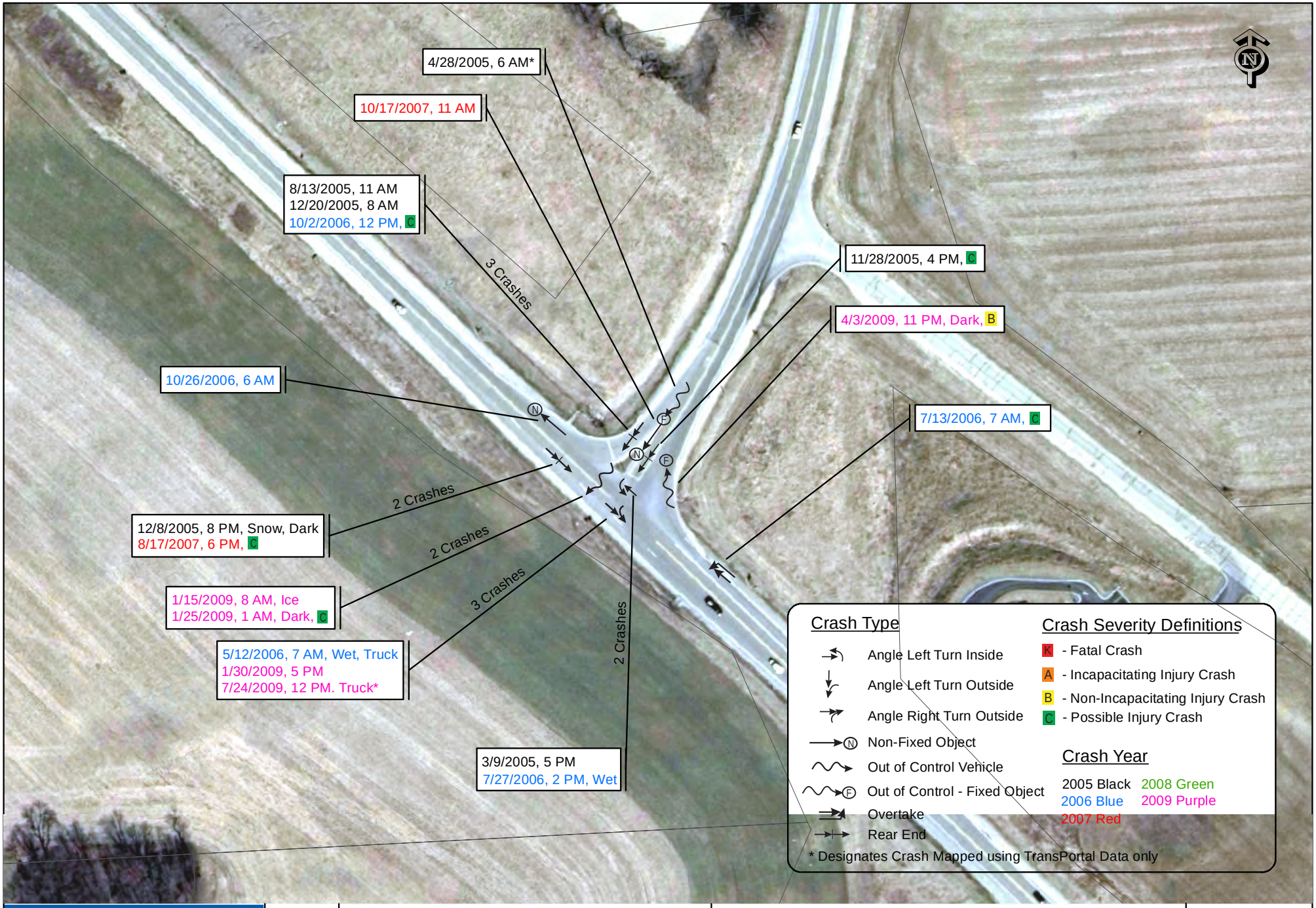

TranSmart	Not to Scale	US 12 Corridor Study	WIS 73 North Leg Collision Diagram	Map 3

Intersection Crash Statistics

TranSmart

Intersection:	US 12 & WIS 73 (north leg)				
Municipality:	Town of Deerfield	County:	Dane	State:	WI
Period	2005 through 2009	Months From:	1/1/2005	To:	12/31/2009

Project ID:	3080-00-09	Date:	5/3/2011

Intersection Characteristics

Traffic Control:	1-way stop	Posted Speed Major:	55
Intersection AADT (2009):	15,400	Posted Speed Minor:	55
Number of Legs:			

Crash Statistics

Crash Frequency and Severity

Year	PDO	Injury	Fatal	Total
2005	5	1	0	6
2006	3	2	0	5
2007	1	1	0	2
2008	0	0	0	0
2009	3	2	0	5
Total	12	6	0	18
Percent	66.67%	33.33%	0.00%	100.00%
Year Avg.	2.4	1.2	0	3.6

Crash Rates

	per MEV
Crash Rate	0.64
Injury Crash Rate	0.21
Fatal Crash Rate	0.00

Light Conditions

		%
Day	15	83.3
Dark	3	16.7
Total	18	100.0

Road Conditions

		%
Dry	14	77.8%
Wet	2	11.1%
Snow	1	5.6%
Ice	1	5.6%
Other	0	0.0%
Total	18	100.0%

Crash Type

		%
Angle	5	27.8%
Rear-End	6	33.3%
Head-On	0	0.0%
SS-Same	0	0.0%
SS-Opposite	0	0.0%
Pedestrian	0	0.0%
Bicycle	0	0.0%
Fixed	2	11.1%
Not Fixed	2	11.1%
Deer	0	0.0%
Overturn	0	0.0%
Other	3	16.7%
Total	18	100.0%

Day and Time

Day of Week	Early Morning 12:00 AM to 5:59 AM	AM Peak 6:00 AM to 9:59 AM	Midday 10:00 AM to 2:59 PM	PM Peak 3:00 PM to 6:59 PM	Late Evening 7:00 PM to 11:59 PM	Total	
Monday			1	1		2	Weekday
Tuesday		1				1	
Wednesday			1	1		2	
Thursday		3	1		1	5	
Friday		1	1	2	1	5	
Saturday			1			1	Weekend
Sunday	1	1				2	
Total	1	6	5	4	2	18	

Vehicle Types*

		%
Car	28	93%
Truck	2	7%
Other	0	0%
Total	30	100%

*Total number of vehicles involved

By Season

		%
Spring	4	22%
Summer	5	28%
Fall	6	33%
Winter	3	17%
Total	18	100%

TranSmart	Not to Scale	US 12 Corridor Study	WIS 73 South Leg Collision Diagram	Map 4

Intersection Crash Statistics

TranSmart

Intersection:	US 12 & WIS 73 (south leg)				
Municipality:	Town of Deerfield	County:	Dane	State:	WI
Period	2005 through 2009	Months From:	1/1/2005	To:	12/31/2009

Project ID:	3080-00-09	Date:	5/3/2011

Intersection Characteristics

Traffic Control:	1-way stop	Posted Speed Major:	55
Intersection AADT (2009):	12,950	Posted Speed Minor:	55
Number of Legs:	3		

Crash Statistics

Crash Frequency and Severity

Year	PDO	Injury	Fatal	Total
2005	1	0	0	1
2006	0	1	0	1
2007	0	0	0	0
2008	1	1	0	2
2009	0	0	0	0
Total	2	2	0	4
Percent	50.00%	50.00%	0.00%	100.00%
Year Avg.	0.4	0.4	0	0.8

Crash Rates	per MEV
Crash Rate	0.17
Injury Crash Rate	0.08
Fatal Crash Rate	0.00

Light Conditions		%
Day	3	75.0
Dark	1	25.0
Total	4	100.0

Road Conditions		%
Dry	2	50.0%
Wet	0	0.0%
Snow	2	50.0%
Ice	0	0.0%
Other	0	0.0%
Total	4	100.0%

Crash Type		%
Angle	1	25.0%
Rear-End	1	25.0%
Head-On	0	0.0%
SS-Same	0	0.0%
SS-Opposite	0	0.0%
Pedestrian	0	0.0%
Bicycle	0	0.0%
Fixed	1	25.0%
Not Fixed	0	0.0%
Deer	0	0.0%
Overturn	0	0.0%
Other	1	25.0%
Total	4	100.0%

Day and Time

Day of Week	Early Morning 12:00 AM to 5:59 AM	AM Peak 6:00 AM to 9:59 AM	Midday 10:00 AM to 2:59 PM	PM Peak 3:00 PM to 6:59 PM	Late Evening 7:00 PM to 11:59 PM	Total	
Monday						0	Weekday
Tuesday				1		1	
Wednesday			1			1	
Thursday						0	
Friday				1		1	
Saturday					1	1	Weekend
Sunday						0	
Total	0	0	1	2	1	4	

Vehicle Types*		%
Car	6	100%
Truck	0	0%
Other	0	0%
Total	6	100%

*Total number of vehicles involved

By Season		%
Spring	0	0%
Summer	0	0%
Fall	3	75%
Winter	1	25%
Total	4	100%

TranSmart	Not to Scale	US 12 Corridor Study	US 18 Collision Diagram	Map 5

Intersection Crash Statistics

TranSmart

Intersection:	US 12 & US 18				
Municipality:	Village of Cambridge	County:	Dane	State:	WI
Period	2005 through 2009	Months From:	1/1/2005	To:	12/31/2009

Project ID:	3080-00-09	Date:	6/23/2011

Intersection Characteristics

Traffic Control:	1-way stop	Posted Speed Major:	25
Intersection AADT (2009):	12,700	Posted Speed Minor:	25
Number of Legs:	3		

Crash Statistics

Crash Frequency and Severity

Year	PDO	Injury	Fatal	Total
2005	1	1	0	2
2006	1	2	0	3
2007	1	1	0	2
2008	3	0	0	3
2009	2	2	0	4
Total	8	6	0	14
Percent	57.14%	42.86%	0.00%	100.00%
Year Avg.	1.6	1.2	0	2.8

Crash Rates

	per MEV
Crash Rate	0.60
Injury Crash Rate	0.26
Fatal Crash Rate	0.00

Light Conditions

		%
Day	12	85.7
Dark	2	14.3
Total	14	100.0

Road Conditions

		%
Dry	10	71.4%
Wet	4	28.6%
Snow	0	0.0%
Ice	0	0.0%
Other	0	0.0%
Total	14	100.0%

Crash Type

		%
Angle	7	50.0%
Rear-End	6	42.9%
Head-On	0	0.0%
SS-Same	0	0.0%
SS-Opposite	0	0.0%
Pedestrian	0	0.0%
Bicycle	0	0.0%
Fixed	0	0.0%
Not Fixed	0	0.0%
Deer	0	0.0%
Overturn	0	0.0%
Other	1	7.1%
Total	14	100.0%

Day and Time

Day of Week	Early Morning 12:00 AM to 5:59 AM	AM Peak 6:00 AM to 9:59 AM	Midday 10:00 AM to 2:59 PM	PM Peak 3:00 PM to 6:59 PM	Late Evening 7:00 PM to 11:59 PM	Total	
Monday		1	2	1		4	Weekday
Tuesday						0	
Wednesday						0	
Thursday		1	1		1	3	
Friday				1		1	
Saturday	1		3			4	Weekend
Sunday		1	1			2	
Total	1	3	7	2	1	14	

Vehicle Types*

		%
Car	27	100%
Truck	0	0%
Other	0	0%
Total	27	100%

*Total Number of Vehicles Involved

By Season

		%
Spring	4	29%
Summer	2	14%
Fall	4	29%
Winter	4	29%
Total	14	100%

Appendix B WisDOT Wetlands Mitigation Policy

TranSmart Technologies, Inc.
2802 Coho Street
Suite 102
Madison, WI 53713
Phone: 608.273.4740
Fax: 608.273.4783

WisDOT Wetland Mitigation Policy Description

I. Legal Background

Wetland compensation or compensatory mitigation is defined by the Wisconsin Department of Natural Resources (WDNR) as; "The restoration, enhancement, or creation of wetlands expressly for the purpose of compensating for unavoidable adverse impacts that remain after all appropriate and practicable avoidance and minimization has been achieved." Wisconsin wetland mitigation requirements are outlined in NR 350; however, NR 350 does not apply to the Wisconsin Department of Transportation (WisDOT). Section 30.12(4)(a) of the Wisconsin State Statues exempts WisDOT from NR 350 under the liaison procedures outline in the Cooperative Agreement Between the Wisconsin Department of Natural Resources (WDNR) and WisDOT.

The Cooperative Agreement between the WDNR and the WisDOT was created to ensure, cooperation and consultation occurs in a timely manner on departmental projects, and also ensure their mutual goals and responsibilities are met. The agreement outlines the procedures for communication between the two agencies, as well as outlines a conflict resolution process.

WisDOT has developed a Wetland Mitigation Technical Guideline with cooperation from WDNR, U.S. Army Corp of Engineers (USACE), U.S. Environmental Protection Agency (EPA), U.S. Fish & Wildlife Service (FWS), and the Federal Highway Administration (FHWA). This technical guideline contains the WisDOT's Criteria and Guidance for Wetland Mitigation.

Executive Order 11990, Protection of Wetlands (1977) directs federal agencies to provide leadership to minimize loss and destruction of wetlands. In response to and in accordance with Executive Order 11990 the U.S. DOT issued DOT 5660.1A, which states

> New construction located in wetlands shall be avoided unless there is no practicable alternative to the construction and the proposed action includes all practicable measures to minimize harm to wetlands which may result from such construction. (WisDOT Wetland Mitigation Technical Guideline)

Section 404 of the Clean Water Act gives the USACE jurisdiction over discharge or fill of materials into navigable waters of the United States. The Section 404 permit application requires the applicant demonstrate that the fill will not significantly degrade waters of the United States and that there are not practical alternatives that would be less damaging to the environment. Applicants also must describe steps that will be taken toward mitigation such as restoring or creating wetlands. Section 10 of the Rivers and Harbors Act gives the USACE control of obstructions that are created over/in navigable waters of the United States. If an obstruction is being created, or a water body is being changed, a Section 10 permit is necessary as well.

II. WisDOT Guidance

Wetland compensatory mitigation for transportation projects is only done after all impacts have been avoided and minimized to the maximum extent practicable. Four general types of mitigation can be used for highway projects (outlined in WisDOT's Criteria and Guidance for Wetland Mitigation): creation of new wetlands (either onsite or off-site), wetland protection, wetland enhancement, or creation of upland buffer area. The need for compensation is determined by weighting primary (direct) impacts. Secondary (indirect) impacts may be

considered as well; however, they do not carry as much weight. Secondary impacts are effects that would be caused by the construction of the project, such as drainage changes along a roadway corridor. The three different compensation methods are outlined below.

1. Creation of New Wetlands

Preferable location for creation of new wetlands is near the project area. Near the project area is defined in the memorandum of understanding part of the DOT/DNR Cooperative Agreement (COA) as within 2.5 miles either side of the project alignment. When wetland loss is less than one acre, it is often considered localized loss. Localized loss is described in the "Wetland Mitigation Technical Guideline Appendix E, Policy on Localized Wetland Loss and Mitigation Sequence." WisDOT has defined three different project types that typically qualify as local loss projects: bridge construction/repair, culverts, and road improvements.

If it is determined that wetland loss on site or near site is not feasible or practical, the compensation shall occur at an offsite wetland bank site. The statewide wetland mitigation bank is a statewide bank serving all 72 counties of Wisconsin. There are three major drainage basins within Wisconsin: Lake Superior, Lake Michigan, and the Mississippi River. Opportunities for wetland bank site development exist within all three of these basins. WisDOT encourages mitigation at a bank site to be completed within the same drainage area. Different wetland sites often require different compensation ratios at bank sites. As a general rule a ratio of 1.0 acre replaced to 1.0 acre lost can be used when wetland acreage losses are applied to an existing bank site where the WDNR and WisDOT agree that credits are available. A ratio of 1.5 acres replaced to 1.0 acre lost is used where wetland acreage losses are compensated as part of a different transportation project occurring at the time of the project where wetland loss occurs.

Some wetlands in Wisconsin are considered sensitive and have been assigned special status by WDNR, USACE, EPA, or FWS. Below is the list of qualifications for special status (which is located on page 10 of the WisDOT Wetland Mitigation Banking Technical Guideline):

1. Wetland is unique to its locality.
2. Wetland is ecologically unique. In Wisconsin these include calcareous fens and wild rice producing wetlands.
3. A resource agency has placed a nationwide emphasis on its protection. In Wisconsin these include riparian forested wetlands that are identified as "bottomland hardwoods" by the U.S. Fish and Wildlife Service.
4. Presence or use by federal or state threatened or endangered species.
5. Public or private expenditure has been made to restore, protect or ecologically manage the wetland on either public or private land.
6. Wetland is on a listing of historic or archeological sites.

Compensation/mitigation for effects on sites that meet the criteria listed above are reviewed by the Wisconsin Wetland Mitigation Bank Review Team (MBRT).

2. Wetland Protection

Wetland protection is a method that can be used for compensation. To be considered credible compensation, the wetland must be purchased for protection. The wetland must be in good condition with minimum signs of disturbance and contain no invasive species. If invasive species are present they must be sporadically placed and not located in concentrations. Wetlands that could be considered for this are those that fall into the sensitive wetlands criteria listed above. The credit ratio used for wetland protection is 8.0 acres protected for every 1.0 acre lost.

3. Wetland Enhancement

Enhancement is the preferred method of compensation by WisDOT and WDNR. This is defined as an increase in wetland functional capacity. Improvements that could qualify are improvements to hydrological connectivity or improvements to the existing vegetative cover. The credit ratio used for wetland enhancement is 3.0 acres enhanced for every 1.0 acre lost.

4. Upland Buffer Area

Upland buffer area is the final acceptable compensation method. This is used in upland areas that are immediately adjacent to and directly associated with the wetland. The area must be vegetated with a combination of non-invasive grasses and forb/shrub species. It must also provide a protective buffer area between other upland areas and the wetland site. The wetland credit ratio used is 4.0 acres converted to buffer areas for every 1.0 acre lost.

This document is meant for reference purposes only. It is not intended to be legal guidance for wetland mitigation or wetland banking. For guidance on wetland mitigation and wetland banking for highway projects in Wisconsin consult the DOT/DNR Cooperative Agreement as well as the Wisconsin Department of Transportation Wetland Mitigation Banking Technical Guideline.

Sources

Wisconsin Department of Natural Resources and Wisconsin Department of Transportation. (2002). *Cooperative Agreement Between Wisconsin Department of Natural Resources and Wisconsin Department of Transportation.*

Wisconsin Department of Natural Resources. (2002). *Guidelines for Wetland Compensatory Mitigation in Wisconsin.*

Wisconsin Department of Transportation. (2002). *Wetland Mitigation Banking Technical Guideline.*

Appendix C Public and Agency Comments

US 12 Corridor Study Local Official/Public Comments

Meeting	Number	Sheet	Comment	Team Response
PIM1			bike lane would be nice, but can live without. Rapid drifting of snow across road in area west of Cambridge. Worst problem I have commuting to Madison is the 'tailgating' from drivers anxious to pass, but no opportunity. So, maybe a short passing lane midway between Cambridge and Hwy N. I'm glad DOT is not looking at widening the road to include 4 lanes, esp between Cambridge & Fort. 2 lanes with good shoulder = good.	The study includes an evaluation of multi-modal opportunities along US 12 and includes a review of local plans and efforts. The study may include an evaluation of existing and future traffic to determine the need for passing lanes and other geometric enhancements. Because of the corridor preservation focus, the study does not include capacity expansion (foor-lanes) or community bypass alternatives as part of the scope.
PIM1			Wider tarred shoulders (not gravel) driveway turn lanes from N to Cambridge.	The study will include an evaluation the current US 12 facility to determine the need for geometric enhancements. Public comments and observations will be considered in addition to the technical analysis.
PIM1			Study Oak Park (W) for traffic coming from new subs in Deerfield off Liberty across from Elem School.	The study will include an evaluation of the intersecting roadways to identify potential improvements to improve safety and operations. Public comments and observations will be considered in addition to the technical analysis.
PIM1			1) Relocate 73 with overpass over 12. 2) On/off ramps for 12 off of 73. 3) Difficult to get onto 12 from residential street (Madison Street) because of curve and knoll and housing to the left. 4) Still would prefer a bypass around Cambridge. Thank you for taking time to inform community.	The study will include an evaluation of the intersecting roadways to identify potential improvements to improve safety and operations. Public comments and observations will be considered in addition to the technical analysis.

Meeting	Number	Sheet	Comment	Team Response
PIM1			A bypass around downtown Cambridge would be very hard on the downtown businesses.	The study is focused on preserving the function of US 12 for as long as possible as a two-lane highway. Though passing lanes and other auxilliary lanes may be evaluated to address long-term safety needs in some locations, capacity expansion (four-lanes) and community bypass alternatives are not included in the scope of this study. A review of community bypasses would require action by the state legislature as a major project.
PIM1			There is a lot of heavy traffic at times with the drivers not giving much consideration to others and farm equipment moving down Hwy.	The study team will coordinate with law enforcement as part of the study agency coordination effort to identify and verify areas of speed, safety, and other enforcement related issues. That information will be considered with public comments in addition to technical analysis in the development of strategies and recommendations.
PIM1			Are traffic lights considered? Schuster play time near the intersection of Hwy W west of Oak Park Hwy W has high traffic count in fall.	Some locations may require preliminary screening for signals as part of this study. A signal Warrant Analysis is not included in the study, however, findings from the screening effort may be forwarded to the Region traffic section for consideration. Private driveways will be evaluated as part of the study process to determine future needs related to safety. The study team will consider the unique traffic conditions at this location. Additional meetings with stakeholders and owner/operators to gather information may be requested.

Meeting	Number	Sheet	Comment	Team Response
PIM1			I would like to comment on the fact that the public could be involved in the decision making process. Thank you. Bill Rehloff	The public will be provided an opportunity to comment on strategies prior to finalizing the study report. In addition, the study includes meetings with project stakeholders during the strategy development phase. The study team will also present draft recommendations for comment to each of the local communities within the study area.
PIM1			You should look at putting turning lanes in at each driveway as was done on US Hwy 12 from Cambridge to Fort Atkinson. Also you should be aware that by the time traffic going west on US Hwy 12 & 18 leaves Cambridge are traveling at least 70 to 80 miles per hour. There also is a lot of passing in the no passing zone.	Private driveways will be evaluated as part of the study process to determine future needs related to safety. Speed related issues could include a review of the existing signs and coordination with law enforcementagencies.The study team will coordinate with law enforcement as part of the study agency coordination effort to identify and verify areas of speed, safety, and other enforcement related issues. That information will be considered with public comments in addition to technical analysis in the development of strategies and recommendations.
PIM1			When exiting driveways even if there is no one there when you look. People speed so much and seem like they appear out of nowhere on your tail. I always feel like some one is going to read-end me!	Private driveways will be evaluated as part of the study process to determine future needs related to safety. Speed related issues could include a review of the existing signs and coordination with law enforcementagencies.
PIM1			In a carpool. We pick up and drop off at 73/12 sideroad. Traffic during rush hour varies. On average, we are stop sign for 3-5 minutes. Have observed dangers at this intersection. 1) semi deceleration and turning. 2) vehicles slowing to turn left. 3) Vehicles entering Hwy 12 from 73 intersections must quickly accelerate to avoid collisions. 4) snowmobile trails crossing 12 in general. 5) agricultural vehicles slowing traffic. 6) School buses with stops on 12/18 cause traffic congestion. 7) High deer population west of Cambridge to second 73 turn. 8) W intersection causes some issues but not as many 73 .	The study will include an evaluation of the intersecting roadways to identify potential improvements to improve safety and operations. Public comments and observations will be considered in addition to the technical analysis.

Meeting	Number	Sheet	Comment	Team Response
PIM1			It's understandable that certain parts of the study area will need improvement. Since these may be smaller projects, it will be in the best interest of the Cambridge business to have traffic flowing on 12 during any construction.	WisDOT offers programs to manage impacts to businesses from construction activities. There are no projects programmed as part of the study, however, minor improvements may be implemented in the near term. Typically, impacts to businesses are considered as part of programmed projects. The comment will be included with the study report to be documented. Prior to implementation of study recommendations, additional coordination with potentially effected communities may be required.
PIM1			Heading south on 73 to Hwy 12/18 it is dangerous to make a left turn.	The study will include an evaluation of the US 12/WIS 73 intersections to determine the need for geometric enhancements. Public comments and observations will be considered in addition to the technical analysis.
LOM 1	4	1	Planned agri-business park in town of Cottage Grove comp plan planned access off North Star Rd and County N with circled drive back in County N.	The study will consider future land use from community comprehensive plans and coordination with officials for the consideration of anticipated traffic, development of strategies, and long-term access management plan.
LOM 1	19	1	Driving east, turning left to pit and 3 homes, 12 narrows to 2 lane and you're kind of left with no place to sit waiting for traffic.	The study will include an evaluation the current US 12 facility to determine the need for geometric enhancements. Public comments and observations will be considered in addition to the technical analysis.
PIM1	29	1	Extremely dangerous turning into this driveway when traveling east. Divided highway ends here - traffic doesn't slow down - need passing lane so vehicles can get around you when waiting to turn in. Caution signs or something.	Private driveways will be evaluated as part of the study process to determine future needs related to safety. Public comments and observations will be considered in addition to the technical analysis.

Meeting	Number	Sheet	Comment	Team Response
PIM1	23	1	A wider tarred (no gravel) shoulder for farm implements and for vehicle exit and entering safely for all cars and trucks.	The study will include an evaluation the current US 12 facility to determine the need for geometric enhancements. Public comments and observations will be considered in addition to the technical analysis.
PIM1	30	1	The gravel on the sides of the highway erodes.	To be forwarded to WisDOT Region Maintenance Section for review.
PIM1	28	1	Tarred shoulder - widened for farm implements and for exiting and entering road from driveways safely.	The study will include an evaluation the current US 12 facility to determine the need for geometric enhancements. Public comments and observations will be considered in addition to the technical analysis.
PIM1	22	1	There is no law enforcement between 3:00 and 6:00 PM.	The study team will coordinate with law enforcement as part of the study agency coordination effort to identify and verify areas of speed, safety, and other enforcement related issues. That information will be considered with public comments in addition to technical analysis in the development of strategies and recommendations.
PIM1	21	1	Needs enforcement for speed between 3 to 6pm. Shoulder is narrow - can't pull onto gravel due to roughness. Field access issues.	The study team will coordinate with law enforcement as part of the study agency coordination effort to identify and verify areas of speed, safety, and other enforcement related issues. That information will be considered with public comments in addition to technical analysis in the development of strategies and recommendations.
LOM 1	18	1	"Wood Trail" no longer town road.	The error has been corrected on the study displays.

Meeting	Number	Sheet	Comment	Team Response
LOM 1	3	1	Lots of farm equipment travels from County N to Deerfield Rd.	This comment will be considered with the findings from the Agriculture Operations Survey to verify locations along US 12 with high potential for agriculture/vehicle conflicts. The combined results will be considerd in the development of study recommendations.
PIM1	31	1	12 & 18 East - Intersection of Nora Rd & Co BN going south _ Very poor vision with way too much speed!!	The study will include an evaluation of the US 12/Nora Road intersection to determine the need for geometric enhancements. Public comments and observations will be considered in addition to the technical analysis.
PIM1	32	1	Tarred shoulders would eliminate gravel flying and much safer for farm implements to move over.	The study will include an evaluation the current US 12 facility to determine the need for geometric enhancements. Public comments and observations will be considered in addition to the technical analysis.
PIM1	15	1	You have safety issues at (Nora) (C Hwy W) no suggestion on how to fix	The study will include an evaluation of the US 12/Nora Road intersection to determine the need for geometric enhancements. Public comments and observations will be considered in addition to the technical analysis.
LOM 1	1	1	Nora Rd/County BN intersection with US 12/18 safety concerns. Turn lanes would help.	The study will include an evaluation of the US 12/Nora Road intersection to determine the need for geometric enhancements. Public comments and observations will be considered in addition to the technical analysis.
PIM1	121	1	In the spring, there is no place for water to drain in the NE corner. Water & snow melt create problems for the corner property.	To be forwarded to WisDOT Region Maintenance Section for review.
LOM 1	20	1	West Jargo Road should be Nora Road. [Nora Road north of US 12 mislabled]	The error has been corrected on the study displays.

Meeting	Number	Sheet	Comment	Team Response
PIM1	91	1 & 2	Too much noise - motorcycles, concrete w/grooves. House too close to road - danger. Difficulty accessing property & highway. Trash - garbage along road.	The study will include an evaluation the current US 12 facility to determine the need for geometric enhancements. In addition, private driveways will be evaluated as part of the study process to determine future needs related to safety. Public comments and observations will be considered in addition to the technical analysis. Will forward trash issues to Region Maintenance Section for review.
PIM1	38	2	Schuester's farm seasonal business Halloween festival	Private driveways will be evaluated as part of the study process to determine future needs related to safety. The study team will consider the unique traffic conditions at this location. Additional meetings with stakeholders and owner/operators to gather information may be requested.
PIM1	128	2	Some type of warning lights and/or signs east and west of the Schuster Farm in fall for their events.	Private driveways will be evaluated as part of the study process to determine future needs related to safety. The study team will consider the unique traffic conditions at this location. Additional meetings with stakeholders and owner/operators to gather information may be requested.
PIM1	60	2	Many Deerfield residents use Hwy 12/Oak Park Rd to get in/out of Deerfield. Any thoughts to improve this intersection? May be worthwhile.	The study will include an evaluation of the intersecting roadways to identify potential improvements to improve safety and operations. Public comments and observations will be considered in addition to the technical analysis.
PIM1	129	2	Improve shoulders and signs at Sunny Lane. Traffic heading west on 18 has to take the shoulder when cars turn onto Sunny Lane.	The study will include an evaluation of the intersecting roadways to identify potential improvements to improve safety and operations. Public comments and observations will be considered in addition to the technical analysis.

Meeting	Number	Sheet	Comment	Team Response
PIM1	39	2	Rough road and needs sign (warning) to help people slowing down. Add an additional lane to keep away from busy traffic. Thank you for setting up this info meeting. It's very useful for us to plan for our Land Life.	To be forwarded to WisDOT Region Maintenance Section for review. The study will also include an evaluation the current US 12 facility to determine the need for geometric enhancements. Public comments and observations will be considered in addition to the technical analysis.
PIM1	73	2	Dangerous intersection. People rush to beat lines of 12/18 traffic. Stop light during rush hour may help. Prefer routing 73 to an overpasswith on/off ramps for 12/18.	The study will include an evaluation of the US 12/WIS 73 intersections to determine the need for geometric enhancements. Public comments and observations will be considered in addition to the technical analysis.
LOM 1	39	2	73 north congestion. [trucks] putzing along not meshing with traffic.	The study will include an evaluation of the US 12/WIS 73 intersections to determine the need for geometric enhancements. Public comments and observations will be considered in addition to the technical analysis.
LOM 1	13	2	US 12 at STH 73 (north). Heavy traffic flow on US 12/18 during rush hour makes it difficult/unsafe for southbound vehicles on STH 73 to turn onto eastbound/westbound US 12/18.	The study will include an evaluation of the US 12/WIS 73 intersections to determine the need for geometric enhancements. Public comments and observations will be considered in addition to the technical analysis.
PIM1	130	2	Bridge? At 73 out of Deerfield is a nightmare at high use times.	The study will include an evaluation of the US 12/WIS 73 intersections to determine the need for geometric enhancements. Public comments and observations will be considered in addition to the technical analysis.
PIM1	16	2	Intersection Hwy 12 & Hwy 73 going into Deerfield. During morning commutes gets slowed down a lot due to people turning into Deerfield and the bypass lane isn't big enough.	The study will include an evaluation of the US 12/WIS 73 intersections to determine the need for geometric enhancements. Public comments and observations will be considered in addition to the technical analysis.

Meeting	Number	Sheet	Comment	Team Response
PIM1	70	2	Hwy 73. Need stop lite or roundabout. Very difficult for buses to cross.	The study will include an evaluation of the US 12/WIS 73 intersections to determine the need for geometric enhancements. Public comments and observations will be considered in addition to the technical analysis.
PIM1	94	2	Traffic light needed. Some times during rush hours its hard to make a left from 73 to 12/18.	The study will include an evaluation of the US 12/WIS 73 intersections to determine the need for geometric enhancements. Public comments and observations will be considered in addition to the technical analysis.
PIM1	59	2	Any chance to more easily connect the 73 - North from Deerfield and going south to Edgerton?	The study will include an evaluation of the US 12/WIS 73 intersections to determine the need for geometric enhancements. Public comments and observations will be considered in addition to the technical analysis.
LOM 1	5	2	Hwy 73 need better traffic control to S73 to N73 and N73 to S73.	The study will include an evaluation of the US 12/WIS 73 intersections to determine the need for geometric enhancements. Public comments and observations will be considered in addition to the technical analysis.
PIM1	103	2	Like to have a turning lane from Hwy 73 Deerfield to go east on Hwy 12. Hwy 12 traffic going east could go to the south around, not need to slow down, except for turning left north. See hand drawn map [in the] comments box. [sketch attached on separate sheet]	The study will include an evaluation of the US 12/WIS 73 intersections to determine the need for geometric enhancements. Public comments and observations will be considered in addition to the technical analysis.
PIM1	44	2	This is particularly bad in heavy fog for Eastbound turning north.	The study will include an evaluation the current US 12 facility to determine the need for geometric enhancements. Public comments and observations will be considered in addition to the technical analysis.

Meeting	Number	Sheet	Comment	Team Response
PIM1	44	2	Going left onto 12 east off 73 north at five at night sometimes take up to 15 minutes.	The study will include an evaluation of the US 12/WIS 73 intersections to determine the need for geometric enhancements. Public comments and observations will be considered in addition to the technical analysis.
PIM1	58	2	Very dangerous and difficult intersection coming off 73 and turning left to go to Cambridge, particularly during rush hour. I'm sure this fact is obvious.	The study will include an evaluation of the US 12/WIS 73 intersections to determine the need for geometric enhancements. Public comments and observations will be considered in addition to the technical analysis.
PIM1	13	2	Look at Highway 18 as the route. Do full study on Hwy 73 south & north from 12/18 to check counts.	The study will include an evaluation of the US 12/WIS 73 intersections to determine the need for geometric enhancements. Public comments and observations will be considered in addition to the technical analysis.
PIM1	105	2	Could lengthen turning lane to go right north off Hwy 12 onto Hwy 73. Not as big an issue as sticker #103.	The study will include an evaluation of the US 12/WIS 73 intersections to determine the need for geometric enhancements. Public comments and observations will be considered in addition to the technical analysis.
PIM1	25	2	No Comment Found	N/A
PIM1	43	2	Hard to pull out of driveway. Passing lane ends at our driveway. People try to pass on the right when going west.	Private driveways will be evaluated as part of the study process to determine future needs related to safety. Public comments and observations will be considered in addition to the technical analysis.
PIM1	45	2	Water runs off road floods our property. Would like to make pond DNR said too bad.	To be forwarded to WisDOT Region Maintenance Section for review.
PIM1	68	2	No Comment Found	N/A

Meeting	Number	Sheet	Comment	Team Response
PIM1	150	2	Hwy 73 south. Can't get onto Hwy 12. Need a bridge for both ways.	The study will include an evaluation of the US 12/WIS 73 intersections to determine the need for geometric enhancements. Public comments and observations will be considered in addition to the technical analysis.
PIM1	104	2	Turning lane Hwy 73 going north, to turn west onto Hwy 12. Same as sticker number 103 going the other way. Where is the money for this? Gov Walker cutting everything.	The study will include an evaluation of the US 12/WIS 73 intersections to determine the need for geometric enhancements. Public comments and observations will be considered in addition to the technical analysis.
PIM1	67	2	No Comment Found	N/A
LOM 1	60	2	US 12 @ Hwy 73 south, difficult to get through the intersection due to traffic volume, especially during rush hour.	The study will include an evaluation of the US 12/WIS 73 intersections to determine the need for geometric enhancements. Public comments and observations will be considered in addition to the technical analysis.
LOM 1	40	2	73 south -- congestion. [trucks] pulling out onto Hwy.	The study will include an evaluation of the US 12/WIS 73 intersections to determine the need for geometric enhancements. Public comments and observations will be considered in addition to the technical analysis.
PIM1	74	2	Dangerous intersection. People rush to beat lines of 12/18 traffic. Stop light during rush hour may help. Prefer routing 73 to an overpass with on/off ramps for 12/18.	The study will include an evaluation of the US 12/WIS 73 intersections to determine the need for geometric enhancements. Public comments and observations will be considered in addition to the technical analysis.
PIM1	50	2	Multiple deer kills	The study will explore recommendations to reduce deer crashes from nation-wide research, however, any future implementation would likely require further study and/or dedicated funding sources. As a general rule, WisDOT does not currently mitigate deer collissions along state highways.

Meeting	Number	Sheet	Comment	Team Response
PIM1	71	2	State Farm Road. School buses travel every day. Should have a turning lane from Cambridge to State Farm Rd.	The study will include an evaluation of the intersecting roadways to identify potential improvements to improve safety and operations. Public comments and observations will be considered in addition to the technical analysis.
PIM1	90	2	Junk cars are distracting and unsightly.	The visibility of the property falls pertains to land use decisions unless it causes a safety hazard for highway users. Land use decisions fall under the jurisdiction of the local unit of government. The local unit of governmment should review and enforce ordinances if necessary.
PIM1	83	2	A portion of this 4 plus acres is industrial zoned	Noted. The comment will be reviewed in conjunction with community comprehensive planning informations as study recommendations are generated.
PIM1	82	2	This is commercial property with commercial access.	Noted. Land use information depicted on study displays is from Dane County Land Information Records. The driveway is correctly depicted as a commercial driveway. The property will be treated as a commercial property for study purposes.
PIM1	48	3	turn lanes needed	The study will include an evaluation of the intersecting roadways to identify potential improvements to improve safety and operations. Public comments and observations will be considered in addition to the technical analysis.
PIM1	79	3	Rodney Road - turning lane. There are ten businesses on this road - also a lower speed limit on 12 & 18 from west of Rodney Road into Cambridge.	The study will include an evaluation of the US 12 facility and intersecting roadways to identify potential improvements to improve safety and operations. Public comments and observations will be considered in addition to the technical analysis.

Meeting	Number	Sheet	Comment	Team Response
PIM1	149	3	Rodney Rd. We need turning lanes/more businesses now and we have more accidents. Definitely should be considered.	The study will include an evaluation of the intersecting roadways to identify potential improvements to improve safety and operations. Public comments and observations will be considered in addition to the technical analysis.
PIM1	40	3	Can you re-route trucks to Rte 18 instead of going through the village of Cambridge? That would help with safety of cars and pedestrians.	A truck origin study will be completed to estimate the percentage of region vs. local trucks. The study may include an evaluation of way finding signage and/or consideration of the influence of other projects currently in progress to determine truck activity and potential recommendations.
PIM1	72	3	12/18. Very confusing intersection. Roundabout or light.	The study will include an evaluation of the US 12/US 18 intersection to determine the need for geometric enhancements. Public comments and observations will be considered in addition to the technical analysis.
PIM1	75	3	Bypass Cambridge to the south meet 12 on east side by Airport Rd	The study is focused on preserving the function of US 12 for as long as possible as a two-lane highway. Though passing lanes and other auxilliary lanes may be evaluated to address long-term safety needs in some locations, capacity expansion (four-lanes) and community bypass alternatives are not included in the scope of this study. A review of community bypasses would require action by the state legislature as a major project.
LOM 1	6	3	Hwy 12/18 better control vehicles/ped.	The study will include an evaluation of the US 12/US 18 intersection to determine the need for geometric enhancements. Public comments and observations will be considered in addition to the technical analysis.

Meeting	Number	Sheet	Comment	Team Response
LOM 1	9	3	12/18 intersection is a mess. Need better traffic control. Pedestrian crossing.	The study will include an evaluation of the US 12/US 18 intersection to determine the need for geometric enhancements. Public comments and observations will be considered in addition to the technical analysis.
LOM 1	15	3	Several crashes at Jefferson St (US 18) and Main Street (US 12) in Cambridge when westbound vehicles on Jefferson St fail to stop at stop sign at intersection.	The study will include an evaluation of the US 12/US 18 intersection to determine the need for geometric enhancements. Public comments and observations will be considered in addition to the technical analysis.
PIM1	151	3	Get rid of the median strips going into the Shell station. Terrible idea.	The study will include an evaluation of the US 12/US 18 intersection to determine the need for geometric enhancements. Public comments and observations will be considered in addition to the technical analysis.
LOM 1	8	3	Hwy 26 bypass/more traffic. Hwy 26 bypass not included. [gentleman from the village was concerned that there is now more traffic on US 18 passing through the village due to work on WIS 26.]	The study will include a review of historical traffic volume data in comparison to the data collected as part of the traffic counting effort for 2011 to identify anomolies that may be related to adjacent projects. This information will be considered prior to forecasting traffic volumes for the use in developing recommendations.
PIM1	55	3	I suggest moving or re-routing Hwy 12 East on Hwy 18 at Cambridge to the Hwy 26 Bypass then south to Fort Atkinson. There are not many houses close or on both sides of Hwy 18 and it would be easy to make it 4 lane! Rodney Knox, N3187 US Hwy 12, Fort Atkinson, WI 53538. 920-563-5625	The study is focused on preserving the function of US 12 for as long as possible as a two-lane highway. Though passing lanes and other auxilliary lanes may be evaluated to address long-term safety needs in some locations, capacity expansion (four-lanes) and community bypass alternatives are not included in the scope of this study. A review of community bypasses would require action by the state legislature as a major project.

Meeting	Number	Sheet	Comment	Team Response
PIM1	115	3	Intersection of 12 & 18 works good - slight confusion when 12 N turns east on 18 and must yield to 12 south traffic also turning east. I own the Piggly Wiggly on this intersection and would like any information regarding changes to this intersection. Mike Day 608-423-4004	The study will include an evaluation of the US 12/US 18 intersection to determine the need for geometric enhancements. Public comments and observations will be considered in addition to the technical analysis. As strategies are developed, the study team may contact interested parties for input.
PIM1	14	3	It would make sense if possible to avoid the village of Cambridge if possible.	The study is focused on preserving the function of US 12 for as long as possible as a two-lane highway. Though passing lanes and other auxilliary lanes may be evaluated to address long-term safety needs in some locations, capacity expansion (four-lanes) and community bypass alternatives are not included in the scope of this study. A review of community bypasses would require action by the state legislature as a major project.
PIM1	108	3	Townsend St needs a footbridge to access Dikelt flow over the waterway!	Multimodalaccomodations are included as part of the strategies and recommendations. The focus of the strategies will be the US 12 corridor, however, local plans and efforts will be considered to make the strategies compatible with local efforts where feasible.
PIM1	116	3	No need for any stoplights in Cambridge!	Some locations may require preliminary screening for signals as part of this study. A signal Warrant Analysis is not included in the study, however, findings from the screening effort may be forwarded to the Region traffic section for consideration.
PIM1	88	3	Sight lines are poor at US 12 & CTH B	The study will include an evaluation of the intersecting roadways to identify potential improvements to improve safety and operations. Public comments and observations will be considered in addition to the technical analysis.

Meeting	Number	Sheet	Comment	Team Response
LOM 1	59	3	US 12 @ CTH B -- there is poor visibility from NB CTH B to Hwy 12, due to buildings and vehicles in the area.	The study will include an evaluation of the intersecting roadways to identify potential improvements to improve safety and operations. Public comments and observations will be considered in addition to the technical analysis.
LOM 1	11	3	Pedestrian and bike path from Cambridge to Park Rd, Lake Ripley park on Park Rd.	The study will consider multimodal accomodations as part of the strategies and recommendations. In addition, public comments and observations may also be considered in addition to technical analysis.
LOM 1	12	3	Bypass lane on south side.	The study will include an evaluation the current US 12 facility to determine the need for geometric enhancements. Public comments and observations will be considered in addition to the technical analysis.
PIM1	47	3	Turn lane - eastbound turning north	The study will include an evaluation of the intersecting roadways to identify potential improvements to improve safety and operations. Public comments and observations will be considered in addition to the technical analysis.
PIM1	109	3	Blind corner restaurant & golf course. Death trap	The study will include an evaluation of the intersecting roadways to identify potential improvements to improve safety and operations. Public comments and observations will be considered in addition to the technical analysis.
PIM1	85	3	Truck traffic through Cambridge is awful. Idea: route trucks onto County G to Hwy 18 or route large thru truck traffic south on new 26 to Hwy 18 intersection and head west to where 18 & 12 meet w/o going through Cambridge. By 'thru' I mean large trucks that are not stopping in Cambridge.	A truck origin study will be completed to estimate the percentage of region vs. local trucks. The study may include an evaluation of way finding signage and/or consideration of the influence of other projects currently in progress to determine truck activity and potential recommendations.
PIM1	131	3	No Comment Found	N/A

Meeting	Number	Sheet	Comment	Team Response
PIM1	12	3	Property purchase of house? Roger C. Rude	There are currently no programmed projects along US 12 in the vicinity of this property. The comment will be forwarded to the WisDOT Region Realestate staff to contact the property owner.
PIM1	124	3	No Comment Found	N/A
PIM1	49	3	deer kills -- multiple frequent	The study will explore recommendations to reduce deer crashes from nation-wide research, however, any future implementation would likely require further study and/or dedicated funding sources. As a general rule, WisDOT does not currently mitigate deer collissions along state highways.
PIM1	51	3	'DRIVEWAY AHEAD' sign would be good to warn vehicles that a slowing vehicle will be turning left - or even right.	Private driveways will be evaluated as part of the study process to determine future needs related to safety. Public comments and observations will be considered in addition to the technical analysis.
LOM 1	10	3	Traffic flow hampered by turning vehicles.	Private driveways will be evaluated as part of the study process to determine future needs related to safety. In addition, the study will include an evaluation of the current US 12 facility to determine the need for geometric enhancements. Public comments and observations will be considered in addition to the technical analysis.
LOM 1	7	3	2 commercial lots and 4 residential lots. Should it be widened to 4 lanes.	Private driveways will be evaluated as part of the study process to determine future needs related to safety. In addition, the study will include an evaluation of the current US 12 facility to determine the need for geometric enhancements. Public comments and observations will be considered in addition to the technical analysis.

Meeting	Number	Sheet	Comment	Team Response
PIM1	110	3	Oakland Center has petitioned to reduce speed (denied)	WisDOT staff will search for and review the petition information as part of the study effort. The information will be considered as recommendations are developed.
PIM1	46	3	No passing zone marked through Oakland Center.	The study will include an evaluation the current US 12 facility to determine the need for geometric enhancements. Public comments and observations will be considered in addition to the technical analysis.
PIM1	34	4	Service box on the corner of 12 & J and Telfer property is below grade level - Never raised after original road construction	To be forwarded to WisDOT Region Maintenance Section for review.
PIM1	5	4	This is my primary access not an agricultural in-drive. This is the pathway by which I move on to my land in normal egress and ingress. It is my primary entrance point. Can you please get that idea stamped into DOT records so we don't have to keep reasserting existing facts. Carl Zentner Hwy 12 920-563-6159	To be forwarded to the WisDOT Region Access Coordinator to determine the current status of the driveway. The 84.25 Map currently identifies the driveway as agriculture use, but may not reflect new permits for a "change of use".
PIM1	6	4	This is a long-established (see Mr. Johnson DOT) agricultural in-drive which has not been shown on your map. I have gone through 3 consultants since 1980 trying to cause permanent recording of these in-drives - apparently this is an impossible task. Carl Zentner Hwy 12 920-563-6159	To be forwarded to the WisDOT Region Access Coordinator to determine the current status of the driveway. Neither the 84.25 Map or the field review identify a driveway in this location.
PIM1	56	4	I suggest moving Hwy 12 N of cemetery and then rejoining Hwy 12 just beyond (east) the Hwy G & 12 intersection.	The study will include an evaluation of the intersecting roadways to identify potential improvements to improve safety and operations. Public comments and observations will be considered in addition to the technical analysis.
PIM1	57	4	I strongly object to widening the road in front of my house. I am only about 50 ft from the 12 right of way. We also just built a new dairy facility.	The study will include an evaluation the current US 12 facility to determine the need for geometric enhancements. Public comments and observations will be considered in addition to the technical analysis.

Meeting	Number	Sheet	Comment	Team Response
PIM1	97	4	The sight lines for vehicles coming from CTH G to Hwy 12 (viewing westbound traffic) are hazardously short.	The study will include an evaluation of the intersecting roadways to identify potential improvements to improve safety and operations. Public comments and observations will be considered in addition to the technical analysis.
LOM 1	14	4	Difficult/unsafe for southbound vehicles on CTH G to turn onto eastbound/westbound US 12.	The study will include an evaluation of the US 12/CTH G intersection to determine the need for geometric enhancements. Public comments and observations will be considered in addition to the technical analysis.
PIM1	112	4	The intersection of Hwy G and Hwy 12 could be improved due to the knoll east of G - lack of visibility.	The study will include an evaluation of the intersecting roadways to identify potential improvements to improve safety and operations. Public comments and observations will be considered in addition to the technical analysis.
PIM1	20	4	Keep Hoard Road open for access to the north side of Fort Atkinson. Vision issue for [?] on other quadrant.	The study will include an evaluation of the US 12/Hoard Road intersection to determine the need for geometric enhancements. Public comments and observations will be considered in addition to the technical analysis. The connection to the city of Fort Atkinson as well as the recent improvements to the WIS 26 crossing will be considered as part of the long-term access management plan for US 12 in this area.
PIM1	19	4	53' freight operations business needs access to turn onto US 12	Private driveways will be evaluated as part of the study process to determine future needs related to safety. Public comments and observations will be considered in addition to the technical analysis.
PIM1	52	4	Bypass lanes to allow vehicles to get around those stopped to make a left turn - general comment for intersections in the corridor.	The study will include an evaluation of the intersecting roadways to identify potential improvements to improve safety and operations. Public comments and observations will be considered in addition to the technical analysis.

1 of 4

LOM 1 and PIM 1 Comment Display

US 12 Corridor Preservation Study

1 in = 2000 ft

TranSmart

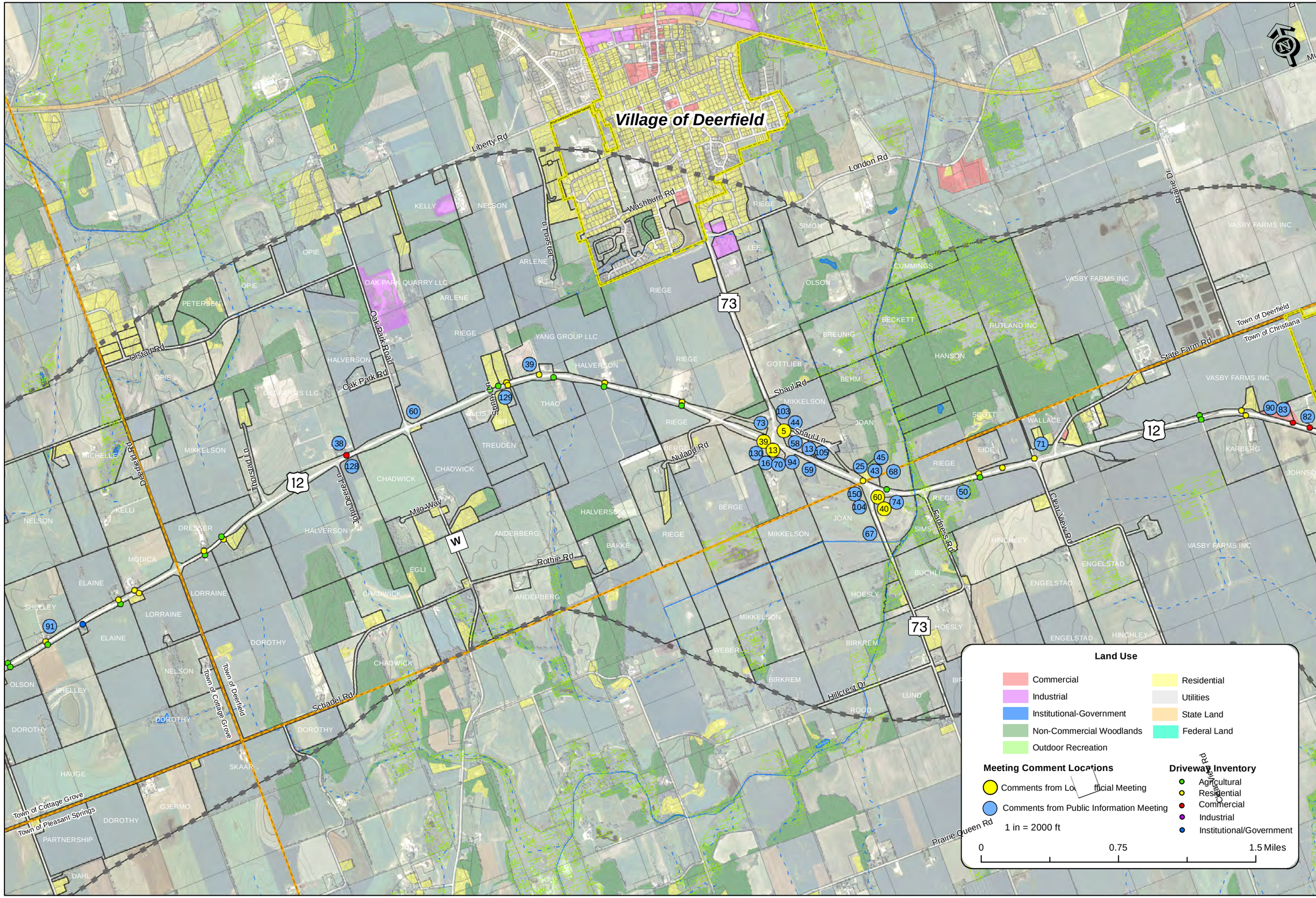

2 of 4

LOM 1 and PIM 1 Comment Display

US 12 Corridor Preservation Study

1 in = 2000 ft

TranSmart

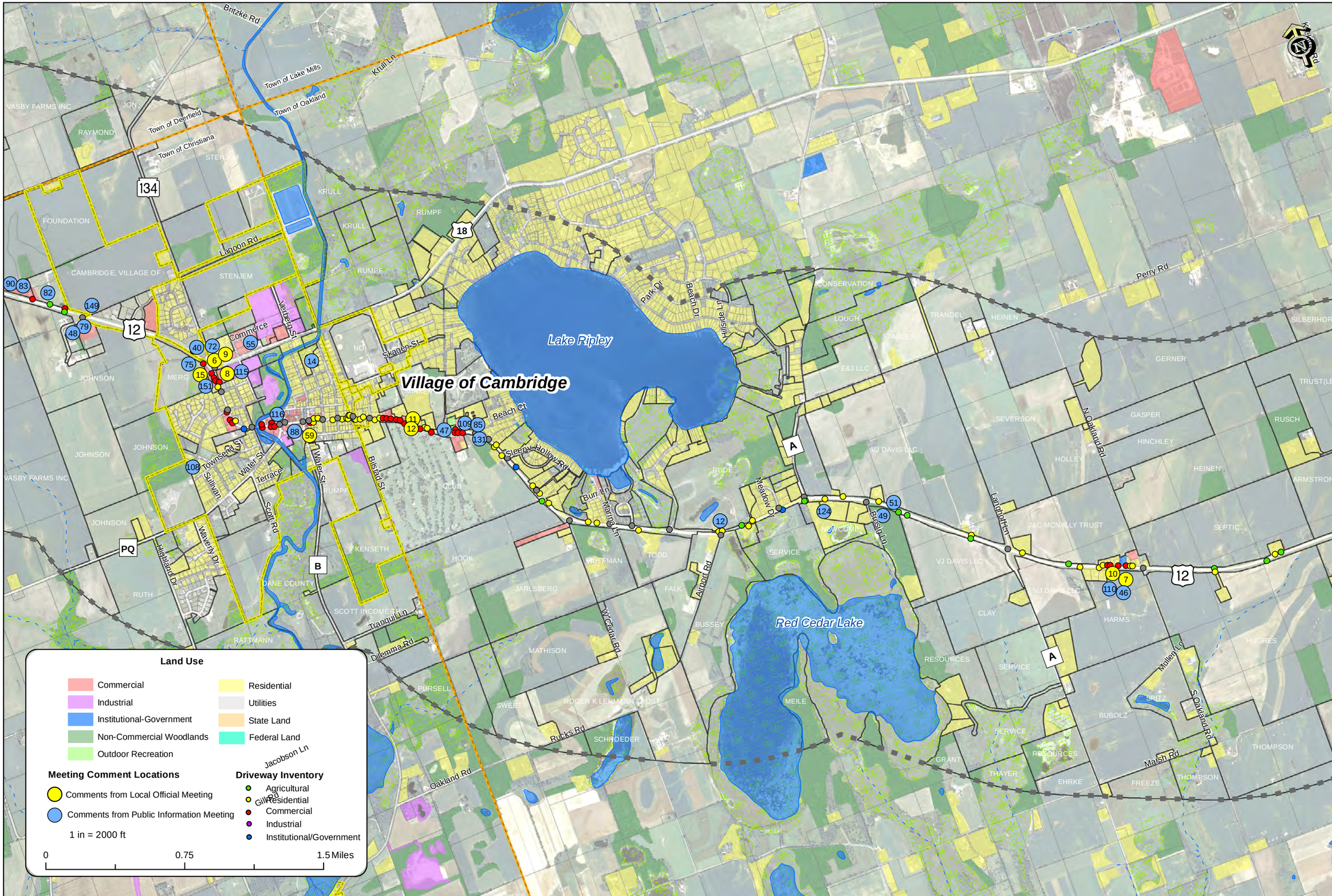

3 of 4

LOM 1 and PIM 1 Comment Display

US 12 Corridor Preservation Study

1 in = 2000 ft

TranSmart

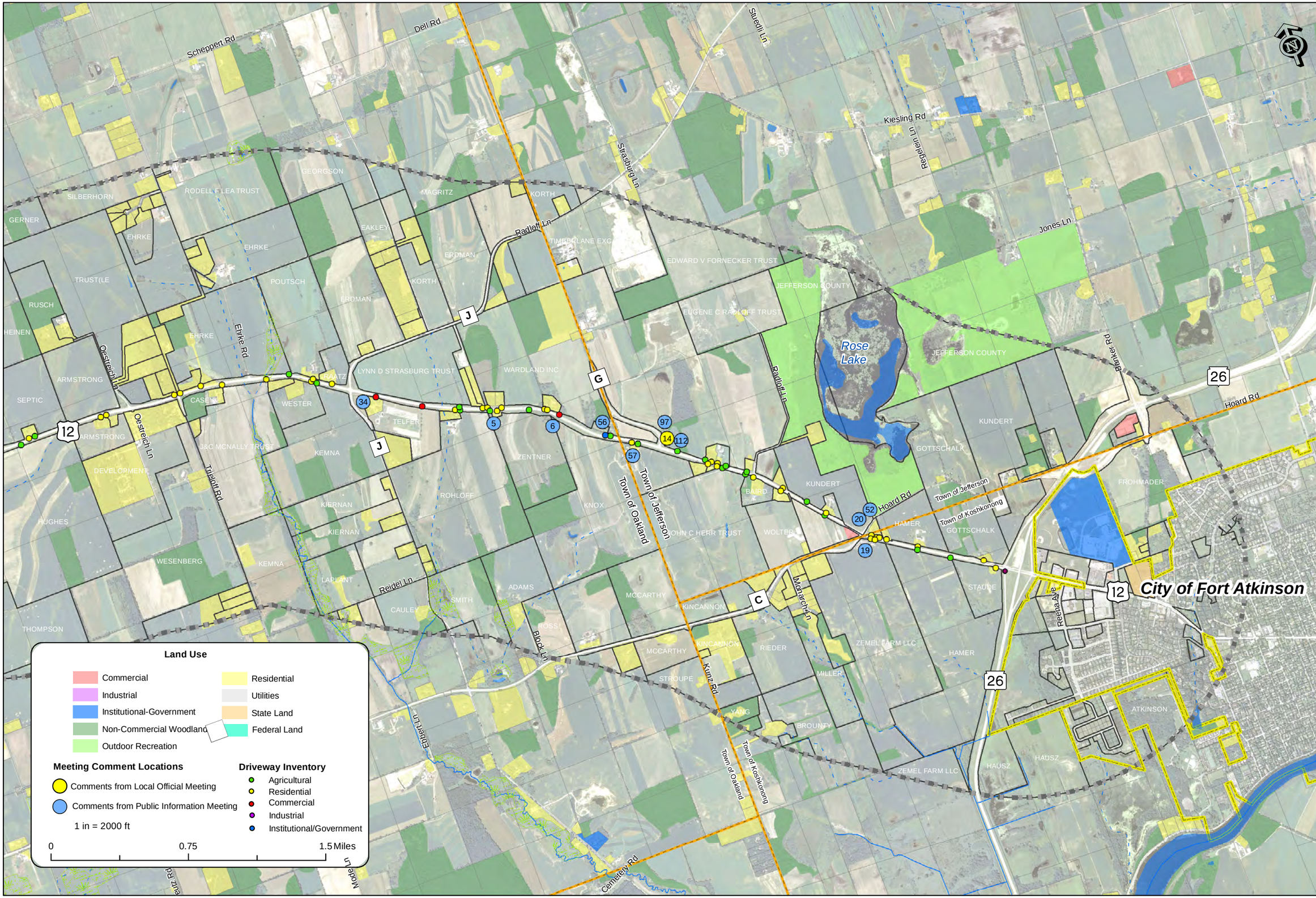

4 of 4

Local Official Meeting Map 11x17

US 12 Corridor Preservation Study

1 in = 2000 ft

TranSmart

Meeting Minutes

US 12 Safety and Operational Analyses, Corridor and Access Management Study
US 12 (County N to WIS 26)
Local Officials/Agency Kick-off Meeting

WisDOT Project ID 3080-00-09
March 24, 2011
6:00 p.m. to 8:00 p.m.
Amundson Community Center, Cambridge

Attendees:

- WisDOT—Franklin Marcos, Mary Pamperin-Volk
- TranSmart—Manfred Enburg, Charles Wade, Rich Kedzior, Joel Brown
- Local Officials—Approximately ten officials attended representing the following communities: Dane County Sheriff's Office, Village of Cambridge, Town of Oakland, and the Town of Cottage Grove
- Other Agencies—Johnny Geybitz (FHWA)

Materials Distributed:

- Study FAQ
- Comment Form

Action Items:

- TranSmart will make corrections to display maps.
- TranSmart will add question to agriculture survey regarding peak agriculture traffic periods.

Purpose of Meeting:

The purpose of this meeting was to introduce the study scope and background to local officials and other agencies with a stake in the corridor.

Meeting Information:

1. *Presentation*
   - Presentation started at 6:30 p.m. PowerPoint slides guided presentation.

2. *Comments from Open House Session*
   - The entire corridor from County N to Fort Atkinson has heavy agriculture traffic in the fall during harvest.
   - Suggest a westbound acceleration lane for trucks the whole length of US 12/18 between the two legs of WIS 73. It is uphill, so heavy grain-laden trucks move quite slowly between the two legs of WIS 73: they emerge from the south leg, turn west on US 12/18, then turn north on WIS 73.
   - The Village of Cambridge is finishing up its bike plan [a draft was provided to WisDOT]. The plan proposes a bike path crossing of US 12 on the west side of the creek, above the sewer line easement.

Meeting Minutes

US 12 Safety and Operational Analyses, Corridor and Access Management Study
US 12 (County N to WIS 26)
Public Information Kick-off Meeting

WisDOT Project ID 3080-00-09
April 20, 2011
6:00 p.m. to 8:00 p.m.
Nikolay Middle School, Cambridge

Attendees:

- WisDOT—Mike Hoelker, Franklin Marcos, Mary Pamperin-Volk
- TranSmart—Manfred Enburg, Charles Wade, Rich Kedzior, Joel Brown
- Public—Approximately 60 attendees (55 people signed in)

Materials Distributed:

- Study FAQ
- Comment form

Action Items:

- TranSmart will distribute the agricultural survey in the next few months.
- TranSmart will meet with Kevin Shelley on Thursday April 21, 2011.
- TranSmart will e-mail Rich Schoemer from the Cambridge News the website link.
- TranSmart will forward Roger Rude's question about his house to WisDOT for a response.

Purpose of Meeting:

The purpose of this meeting was to introduce the study scope and background to members of the public and receive input on the study corridor.

Meeting Information:

1. *Presentation*
   - Presentation started at 6:30 p.m. PowerPoint slides guided presentation.
   - The presentation was followed by a brief Q&A session.

2. *Comments from Q&A Session*
   - You stated the study will examine environmental, social, and transportation issues, does it meet any state or federal criteria for a project on a roadway?
     - This is not a NEPA project; it is compatible with NEPA, but is a planning level scan of existing conditions not falling under those requirements. When we say social aspects we are looking at census data, community plans, we also look at environmental justice aspects of the project so we are not adversely affecting any specific groups of people.
   - Will you accept letters?
     - Yes, absolutely, we also map the comments that correspond to the dots you place on maps during the dot exercise. The data will be readily available; we include all the public comments within the report.

- Will you please keep the traffic flowing during future construction within the village of Cambridge? Businesses owners and other people need the traffic for their businesses to stay prosperous. We would like to see traffic signals to slow traffic down so they can look closer at our stores to see what type of services we offer. In the last few years I have seen three antique stores and multiple art studios close. We just really need the traffic coming through town so we can get more business. Please pay attention to us.
- Please take a serious look at installing a structure at the WIS 73 intersection. Please coordinate data collection with the State Patrol to see when the scale is open. Sometimes when the scale on I-90 is open we get up to 12 tractor trailers per minute.
    - We have identified the WIS 73 intersection as a priority and are currently looking at the intersection in detail. We have expedited the traffic count process on the intersection.
- Chuck stated we will be here until 8:00 PM please come talk to us one on one if you have more questions.

3. *Comments from Open House Session*

- Temporary signage at the Schuster farm property would be helpful in the fall during their busy season. There is heavy queuing along US 12 when people are coming in and out of the property. It is a larger problem at night. If temporary event signs were placed along the corridor I think it would help a lot. Two crashes last fall resulted in injury.
- Is it possible to have wider shoulders along the corridor? Or simply improve the existing shoulders?
- What is the feasibility of turn lanes along Rodney Lane? I live on Rodney Lane, sometimes it is very difficult to get in and out, my neighbors and I just don't feel safe all the time.
- Is it possible to conduct traffic counts at the US 12 and County W/Oak Park Rd intersection?
- There is a problem with people passing when we are turning onto Sunny Lane, everyone takes the shoulder. It is not a safe situation. Is it possible to have a paved shoulder or turn lane at this location?
- There is additional truck traffic at WIS 73 when the scales on I-39/I-90 are open.
- The curve at the WIS 73 (south leg) intersection is dangerous.
- A property owner (Roger Rude) on the east side of the village would like to raze the existing home and construct a new house further from the highway. He wanted to know if there were plans or programs that he may have access to as part of his efforts. Chuck indicated he would forward the question to WisDOT to respond to him.
- A property owner along the south side of US 12 in the vicinity of Hoard Road indicated he is already 50 feet from the right of way and recently constructed a barn on his property. He would not wish to give up more property near the house, but would like to know where the highway will be in the future if he should desire to build more barns.
- One attendee was not happy with the engineering of the last improvement on US 12. Safety concerns at Mud Creek Bridge and WIS 73 North and South intersections were also discussed.
- A few attendees were concerned that the displays did not accurately show their property lines vis-à-vis the US 12 right of way.
- One attendee was very concerned about the loud road noise of motorcycles and trucks.

Comments were also collected as part of an open house session exercise. Those comments are tabulated in a separate comment database for the project.

Meeting Minutes

US 12 Safety and Operational Analyses, Corridor and Access Management Study
US 12 (County N to WIS 26)
Local Officials Meeting

WisDOT Project ID 3080-00-09
May 6, 2011
9:00 a.m. to 10:30 a.m.
Jefferson County

Attendees:

- WisDOT—Franklin Marcos, Mary Pamperin-Volk
- TranSmart—Manfred Enburg, Charles Wade
- Local Officials—Gary Petre, Carl Zentner, Bill Kern, Jim Madoc, John Molinaro, Michelle Staff, Brian Udovich

Materials Distributed:

- Maps of existing US 12 Study Area
- PowerPoint presentation
- Handout of data collection efforts to date

Action Items:

- TranSmart to contact Jefferson County Zoning Dept to acquire Agriculture Preservation Plan Update when completed in July 2011
- TranSmart to include discussion of the current WisDOT policy for wetland mitigation in the study report
- TranSmart to review the FAQ Sheet to include a question about the studies along US 12 and their differences.
- TranSmart to revise the information presented on the crash slide to be more user friendly.
- TranSmart to contact Jefferson County Parks coordinator to discuss traffic impacts at the fairgrounds during special events.

Purpose of Meeting:

The purpose of this meeting was to introduce the study scope and background and to gather input on issues that should be considered from the Jefferson County local officials' perspective.

Meeting Information:

1. *Presentation*

   Chuck Wade from TranSmart presented the project background information.

2. *General comments from discussion*
   - John asked if the study will help to identify funds for replacement of informational signs. The County/WisDOT have a contract to replace signs, however, some signs are not being replaced due to lack of funding. The County views the lack of informational signs as a potential contributor to safety issues as drivers look for their destinations. Regulatory signs

will be replaced. The study can identify signage as an issue, however, no funds have been earmarked directly from study activities at this time.

- Traffic on US 12 could be influenced from the closure of the local WIS 26 route through Fort Atkinson. This could influence traffic counts at the US 12/18 intersection as travel through the city has caused some users to identify alternate routes. The bypass corridor should be open in the near term.
- John Molinaro indicated a concern he has is the blind curve near the bowling alley for those wishing to access US 12 from the side road. It is hard to see vehicles approaching from the right.
- A question was raised as to how to explain to the public why there are multiple studies that appear to potentially conflict or not consider each other. For example, it appears that WisDOT is promoting four lanes in the US 12 Solutions Study, but only two lanes west of Fort Atkinson. WisDOT explained that traffic forecasts and current needs warranted looking at a four-lane bypass in Fort Atkinson, but traffic volumes are still forecasted to be too low along US 12 west of WIS 26. It is not to say that some day a four-lane facility could exist between Fort Atkinson and Madison, but that this study is looking at maintaining the two lanes. Chuck explained that even if a four-lane project is called for by the state legislature, that the required study and design efforts would likely take several years and traffic on US 12 would continue to increase. This study looks to be proactive rather than reactive to anticipated safety needs. WisDOT explained that all of the planning efforts are in the same group in the Region and that the PM's coordinate with each other.
- WisDOT presented background information on the latest coordination efforts for the US 12 Solutions Study. WisDOT indicated that they have been in discussions with the state legislators about the preferred alternative selection and why it was selected. The goal is to have a preserved corridor when traffic warrants implementation so that development does not preclude the ability for implementation. It is recognized that the impacts are controversial for the study.
- John indicated that Jefferson County is aggressive in preserving the agricultural land use along US 12 and that the study team should be sensitive to the use of terms such as "strip mall development" that will not be well received. The typical type of land use changes anticipated would be the conversion of typical farming activities converted to more intense agribusiness activities with the potential to generate more traffic. These types of changes would be relatively slow over time.
- TranSmart clarified the access controls in place on the US 12 corridor and a discussion of the difference between an access control mapping effort under 84.25 statutes, corridor preservation study, and capacity expansion projects.
- TranSmart discussed the history of WisDOT planning since 1950 and 1990 and the perception of why folks may think there is a four-lane project on the shelf in waiting vs. the reality of the change in focus from then to now.
- John Molinaro indicated that the County would like wetlands to be mitigated in the county rather than at a wetland mitigation site far away. WisDOT indicated the current process is to mitigate as close to the project as possible.
- A question was raised about how traffic volumes (AADT) are determined. TranSmart described the process and that the highest peak is typically used to determine the facility design for improvements. TranSmart indicated that folks should tell us when special events might impact US 12 traffic so that that information can be considered in the strategies. The County recommended contacting the county fair parks coordinator to talk about fairs, the auto show, etc. During the auto show, several car dealers will park cars on the shoulders of highways in the County to increase sales. The only county park in the corridor is located

along Radliff Road and holds weddings and other special events that could have a minor influence on US 12.

- The County Highway Department will ask its snow plow crew if there are any hazardous areas that the study team should be aware of along US 12.
- The County indicated that local property owners will push back against property acquisitions for strategies and to be prepared to defend any impacts.

Meeting Minutes

US 12 Safety and Operational Analyses, Corridor and Access Management Study
US 12 (County N to WIS 26)
Local Officials Meeting

WisDOT Project ID 3080-00-09
January 28, 2014
5:00 p.m. to 7:00 p.m.
Amundson Community Center, Cambridge

Attendees

- WisDOT—Franklin Marcos, Brandon Lamers, John Jenkins, Craig Pringle
- TranSmart—Charles Wade, Rich Kedzior
- URS—Nick Becker
- Local officials—John Molinaro and Brian Udovich (Jefferson County), Jeff Woods, Rudy Bushcott, and Evelyn Johnson (City of Fort Atkinson), Tom Jensen (Town of Oakland)

Materials Distributed

- Comment form

Purpose of Meeting

The purpose of this meeting was to present draft study recommendations to local officials prior to the study's public information meeting scheduled for March 4, 2014.

Meeting Information:

1. *Presentation*
   - Presentation started at 5:30 p.m. PowerPoint slides guided the presentation.
   - The presentation was followed by a brief Q&A session.

2. *Comments from Q&A Session and Open House*
   - It was asked if a clearer definition of when "Short-term" vs. "Long-term" recommendations could be implemented. There is not set answer to the question as it will depend on the pace of land use changes, traffic, growth, and safety issues. Short-term recommendations such as the WIS 73 jug-handle will occur as soon as 2016, intersection improvements and access changes could happen in the 3 to 5 year timeframe. Long-term recommendations are likely at least 20 years away such as the recommendation with the realignment of US 12 east of the village.
   - Property owners in the Oakland Center hamlet are concerned about having safe access to US 12 from their properties. The hamlet is a logical location for compact growth from Jefferson County's perspective. Although the town hall is no longer located there, one of the hamlet's taverns is experiencing a renaissance and its business is growing, bringing more entering and exiting vehicles. Conflicts and safety issues between US 12 through traffic and entering and exiting vehicles are apparent; US 12 traffic moves too fast to enter the roadway easily.
   - A question was asked if deer crashes are considered as part of the safety analysis. Deer crashes are calculated, however, the state does not identify mitigation measures for deer crashes. US 12 had higher than average deer crashes to the west of the village of

DRAFT

Cambridge during the period studied. The study includes a review of mitigation practices used in other states for reference.

- Cambridge officials and business owners are concerned about construction impacts on business activity and customer access. Cambridge businesses have yet to fully recover from the impacts of US 12 reconstruction in 2004 and 2005 within and near the village. WisDOT should be cautious about planning for and proceeding with any reconstruction of the US 12/US 18 intersection.
- Jefferson County Highway assistant commissioner noted that the golf course now has 2-3 holes flooding since US 12 was reconstructed in 2004. The golf club would likely want the drainage corrected and improved if US 12 was realigned in the Lake Ripley area.
- The City of Fort Atkinson is very interested in WisDOT's long-term access proposals for the area between County C/Hoard Road and WIS 26 and is sympathetic to the department's access management goals. The area is planned for commercial development in the city's Comprehensive Plan.
    - Emergency responders will want a closer access to these properties than County C/Hoard Road, perhaps a public road midway between County C and WIS 26.
    - Fort Atkinson officials noted that an overpass of WIS 26, such as a by a local road like Commonwealth Drive, could provide the needed local access to the area west of WIS 26 and south of US 12.

DRAFT

Meeting Minutes

US 12 Safety and Operational Analyses, Corridor and Access Management Study
US 12 (County N to WIS 26)
Public Involvement Meeting

WisDOT Project ID 3080-00-09
March 4, 2014
6:00 p.m. to 8:30 p.m.
Cambridge Elementary School, Cambridge

Attendees

- Approximately 50-55 local residents
- WisDOT—Franklin Marcos, John Jenkins
- TranSmart—Charles Wade, Rich Kedzior, Dan Meier
- URS—Nick Becker
- Dane Partners—Mike McCarthy

Materials Distributed

- Comment form

Purpose of Meeting

The purpose of this meeting was to present draft study recommendations to local residents in the US 12 study corridor.

Meeting Information:

1. *Presentation*
   - Presentation started at 6:30 p.m. PowerPoint slides guided the presentation.
   - The presentation was followed by a brief Q&A session.

2. *Comments from Q&A Session*
   - Will WisDOT create passing zones on US 12 to address platooning?
     - We studied passing zones for the corridor at locations west of Cambridge. We found that a westbound passing lane might be feasible. However, we were not able to recommend an eastbound passing lane because of the presence of numerous public road intersections and private driveways. There is not enough spacing between the public road intersections to create a sufficiently safe eastbound passing zone per WisDOT standards.
   - The Village of Cambridge is looking to emplace a safe pedestrian crossing of US 12 near the Piggly Wiggly. We were awarded a grant from Dane County to do this. Who should we coordinate with?
     - Please fill out a comment form with your information and we will connect you with the appropriate person.
   - I think a roundabout at US 18 would make pedestrian crossings more difficult.
     - Roundabouts can sometimes make pedestrian movements more time consuming. However, they can be designed to improve pedestrian crossings if the crossings are put in the right places. Keep in mind that vehicles are required to yield to pedestrians at roundabouts.
   - Some roundabouts appear to be too small for trucks. Their wheels run up on the island.

DRAFT

    - The roundabout concepts here for the US 12/18 intersection were designed with larger oversize/overweight vehicles in mind. The roundabout is larger and the islands are designed for mountable curbs for the larger and longer trucks.
- What are you doing to address the issue of 120,000 pound trucks on US 12? What are these trucks hauling? Where can we get this information?
    - There is a person at WisDOT that handles permitting for overweight trucks that can be contacted by telephone.
- Requiring trucks to bypass the Cambridge business district would save money. I would like to see a comparison of costs.
- I would like a transcript or a recording of this meeting. It would be helpful for the hearing impaired. I think it would be good public policy to have a transcript or recording of meetings like this.
    - That is a good suggestion. Transcripts are usually only provided for public hearings but not informational meetings like this. If you give us your contact information we could send you the meeting minutes. We will also pass the comment to the public information team.
- Are you aware that the Village of Deerfield Comprehensive Plan proposes new public road intersections on US 12 west of WIS 73?
    - Yes, we are aware that the plan proposes two or three new road connections in that area.
- When will we see US 12 converted to four lanes?
    - US 12 is already meeting the traffic volume thresholds for conversion to four lanes. However, such an action would be several years in the future. The legislature would have to approve such a project and funding would have to be available to conduct a capacity expansion to four lanes. It would compete against other projects at the state and federal levels.
- Are there competing interests between the WIS 73 project versus the US 12 corridor study?
    - The WIS 73 overpass and jug handle project originated from the US 12 corridor study. There is no conflict between them. Staff and consultants who work on both efforts coordinate with each other in the Madison Southwest Region office.
- Why didn't WisDOT build turn lanes at County G and other locations when the highway was torn up and reconstructed ten years ago? You moved it 200 feet so you could have installed the turn lanes then.
    - This could have been a matter of funding.
    - At the time of construction, turn lanes might have not been warranted.
    - Design standards have also changed since construction.

3. *Comments from Open House Session*

- Concern was expressed about heavy truck traffic entering US 12 from a quarry on Oak Park Road by a neighboring farmer. During peak construction season, about 60 trucks leave this quarry per day. This quarry is expanding and is expected to expand more as a result of the WIS 73 and I-39/90 reconstruction projects.
- There should be one more field entrance on your map to one of my fields [between access points 4 and 5]. It has an asphalt apron and I believe it's on my deed. Also, driveway #13 was once residential, and might be in the permit, but we tore down the old house there.
- The paved shoulders are not wide enough west of Cambridge. It would be safer for me to enter and exit US 12 with my farm equipment if the paved shoulder was wider. Also, lots of drivers pass left-turning vehicles on the right; paving the shoulders might make this safer.
- A concern was expressed regarding the drop-off at the edge of paved shoulder to the aggregate.

DRAFT

    - Fully-paved shoulders might address this.
- Lake Ripley Country Club Golf Course would like to be notified if and when any improvements occur near the golf course, especially a realignment of US 12.
- Several farmers said that all field entrances are needed throughout the corridor due to lack of other feasible access to property. They were encouraged to fill out comment forms to provide detail about which field entrances they had concerns.
- We do not like the concept east of Cambridge. It impacts the golf course and creates roads on both sides of my house.
- Property owner (NE quadrant of US 12/Hoard Road) needs both driveways for semi-truck access.
- Property owner southeast of CTH G needs both driveways for semi-truck access related to farm.

DRAFT

Commenter	Address	Telephone	Email address	Comment	Response
Carl Zentner	713 Cloute Street	920-563-6159		There is a missing access point complete with curb and gutter and concrete apron directly south of labled access points 175 & 176. This access point is important because the hill & topography on the property makes the far east point of the property very difficult to access.	Review of 84.25 plat indicates: 1) agricultural access on south side of US 12 across from #176 is not permitted; and 2) driveway 177 is permitted for agricultural use, but actual use is commercial.
Carl Zentner	713 Cloute Street	920-563-6159	zentnerc@gmail.com	The two green squares on the western edge 169 and 171 of my property are accesses for two different ownerships. Mr. Johnson, the foreman on the last regrading of Hwy 12, suggested joint ownership (strongly encouraged). I resisted this suggestion because these call for a great deal of fill for 169 to get it up to level with 171. Shared driveways always produce maintenance problems for the owners in the future. I understand it is one small "improvement" in the eyes of the DOT.	Noted. Does not change recommendation.
Art Mikkelson	3428 Thorstad Lane, Deerfield	764-5574		Re: traffic from Schusters Playtime Farm being transferred to Thorstad Lane. Too much traffic with farming operations going for us as is. Refigure it please!	Noted.
Andy Mikkelson	Deerfield			Regarding driveway/access PR6 across from John Deere Lane, why does "optional" route go west to Thorstad Lane? It looks to be closer to run it east to Hwy W, especially with the high seasonal use that "driveway" PR6 gets during the summer and fall. This would make optimal use of the turn lanes at the W/US 12/18 intersection. And I say "driveway" because it is being used essentially as a commercial driveway, and most would agree.	The proposed connection to Thorstad Lane limits impacts to Schuster Farm property. A connection to Oak Park Road would entail impacts to other properties. A future connection to Oak Park Road could be considered depending on future land uses and the status of property ownership.
Steve Struss	313 South St., Cambridge WI 53523	608-228-2119	struss@frontier.com	The Village of Cambridge is planning to install a safe crossing on Hwy 18 just east of the intersection with Hwy 12. We would like to coordinate this with the DOT (and get the proper permits) to do this correctly. Who should we work with for this project?	Refer to SW Region multimodal coordinator.
Mike Day	Cambridge Piggly Wiggly, 100 Jefferson Street	608-423-4004; 608-438-4948	mday@shopthepig.com	Would like to be contacted with any information if there is any development near the intersections of highways 12 & 18 & 134.	Noted. Property owner would be notified in conjunction with any future project planning and construction.
Shelley Schroedl	6597 Hwy J			Coming out of Fort Atkinson going west on 12 have found right turn lane to Hwy G to be odd. Either seems too short or something. Might have something to do with the people wanting to come out from G. Kind of a touchy place.	Adding turn lanes is included in study recommendations.

Commenter	Address	Telephone	Email address	Comment	Response
Eric Wittwer	102 W. North Street, Cambridge 53523	414-840-1070	ekwittwer@hotmail.com	My concern is the occurrence of accidents where a vehicle crosses the centerline and causes head-on or near head-on collisions. It was stated that weather was a factor--weather will always be a factor in Wisconsin. Can you statistically determine areas where accidents occur and address them in the short term. Nora Rd intersection, AM intersection, W intersection are dangerous especially in poor weather. What can be done "cheaply" to address these issues short term?	Mainline and intersection crashes were analyzed in the US 12 Safety Analysis Report. Evaluation of the corridor for centerline rumble strips is included in study recommendations. IHSDM analysis was also conducted.
Jeffrey Quamme	232 Kleine Street, Deerfield 53531	608-576-6671	j.quamme@charter.net	I like the options shown at the intersection of CTH W/Oak Park Road. My concern is that this should be done as soon as possible. The current intersection does not have adequate acceleration/deceleration lanes and the traffic movement currently happening with vehicles moving around left-turning vehicles is extremely dangerous. Not to mention it happens at a high rate of speed. I have been observing increasing traffic on the side roads as well as on USH 12 & 18. If the improvements are not given a high priority, I feel this intersection will begin to see an increase in traffic incidents. I also am convinced that the new 73 interchange will not decrease the use of Oak Park as a front door to Deerfield. A large area to the west of Deerfield was annexed in 2008 and the development will accelerate the use of Oak Park Rd in upcoming years.	Noted. Recommend monitoring Oak Park Road and WIS 73 after WIS 73 jug handle intersections and overpass are constructed.
Kris Hampton	3310 County N, Cottage Grove	608-279-2279	AGX44@herr.com	Are you doing anything to make the Hwy safer for farm machinery on the roadway? Make the improvements to 12 & 18/Nora Rd.	Shoulder paving is discussed in the final report.
Stanley Lien	372 ? St Cambridge	423-4014		Look at (from the east) to the county line go north down Simonsen Street to [blank] is vacated 12 & 18 intersection on NW corner of village give the village 12 thru the village	A bypass of the village is not within the scope of this study.
Tim & Jenny Adas	W9477 US Hwy 12	608-886-3697	timllmlb@yahoo.com	We would prefer not to lose our historic house where we have access to driving range and golf course where I (Tim) work. Under the long range planwe lose our house and convenience to my work. Although we understand the frontage road further increases safety, we see very few accidents (0 in 3 years) and feel speed limit enforcement could go a long way.	Noted.
Bonnie Hamer	W6844 Hwy 12, Fort Atkinson			Yes I realize there is a problem with excessive driveways between Hwy 26 Bypass and Hoard Road which present a problem but think a speed zone could be in place to CTH C as a temporary fix. Drivers come from a two-lane (35 mph) narrowing down to one lane and just speed up to 55 mph (more like 60/65) where all these turnoffs are.	Noted. WisDOT has a defined process to change speed limits if requested by local governments.

Commenter	Address	Telephone	Email address	Comment	Response
Roger C. Rude	W9156 Hwy 12, Cambridge 53523	608-423-3190		1) Place survey point southeast corner of my property. And survey point near driveway by the house. 2) Need name and address phone number of overweight truck permits.	1) The property owner was contacted. He indicated that survey markers on his property were removed during the 2004 construction and never replaced. 2) The telephone number for the WisDOT OSOW program was given to him.
Bill & Karen Gottschalk	W6746 Hoard Road, Ft Atkinson 53538		Billgo@Alphaacs.com	Please send study display maps and web site information.	Resident notified on 3/28/2014 about availability of materials on website.
Steve Gasper	State Farm Rd		ssgasper@frontier.com	1) The US 12 intersections with WIS 73 have operational problems. 2) The Clear View and State Farm Rd intersections need to be addressed. They are confusing and create a safety hazard. 3) The configuration of the US 12/US 18 intersection in Cambridge is difficult for trucks to negotiate especially for eastbound trucks turning left onto US 18. 4) The intersection of Hwy 18 and Potters Road needs turn lanes and safety improvements due to the heavy school-related traffic and poor visibility.	1) The junction of US 12 and WIS 73 will be reconstructed in 2015. 2) The study recommends a realignment of these two intersections into one. 3) Noted. The study provided three design concepts for this intersection. 4) The study did not examine US 18.
Gail Vorlob	113 Spring Street, PO Box 442, Cambridge 53523		gail.e.vorlob@ampf.com	I drive the route between Fort Atkinson and Cambridge daily to work. Almost daily I witness some of the worst traffic situations imaginable. Especially people passing on double yellow lines where drivers coming toward us have to head for the shoulder to miss a head-on collision. I won't even go into the tailgating situation. What we really need is at least one passing lane. I am amazed that there are not more accidents on that stretch of road.	The study recommended an eastbound passing lane west of Cambridge but not a westbound one due to the presence of too many intersection and driveways.
Virginia Newcomb	W 8999 US Hwy 12, Fort Atkinson		virginia.newcomb1@gmail.com	I would like any written materials available and would like to know of any proposals to change the roadway around our home or access to our home or lot that is adjacent.	Resident notified on 3/28/2014 about availability of materials on website.

Commenter	Address	Telephone	Email address	Comment	Response
Steve Davidson			stevedavidson1984@gmail.com	1) The major improvement about 15 years ago was excellent. Several additions, such as the right-turn lane from westbound 12 into northbound County A were great improvements. 2) Before the major improvements, traffic moevd at varying speeds because of the dramatically varying quality of the road, and people were more likely to pass because of this. Now, people seem comfortable driving a steady 60, and passing is minimal. (but I don't drive the peak commute times). 3) I don't see speed as a problem on the orad or as a primary contributor to accidents. 4) I agree that Hwy 73 intersection area is a problem and should be a priority. 5) Schusters Farm is another problem area. 6) Traffic volume isn't steady. Other than peak commute times, it's very reasonable. 7) I don't see agricultural traffic being any more or less of a factor in the future than it is now. 8) It's hard to imagine significant growth in daily commuter traffic along the corridor you are addressing, although I'd like to think Cambridge will continue to have potential as a viable bedroom community for Madison.	Noted.
Kristin? Christine?			chrismoerke@live.com	wants meeting notes and presentation.	Resident notified on 3/28/2014 about availability of materials on website.
James Skaar	1893 Hwy 12/18, Cottage Grove	608-764-5316		Designated areas to be considered for removal pertaining to our farming operation and personal home. #14 and #17 --field roads necessary for our operation for the land on those farms. They were installed as necessary drives when the highway was done in '98. #18 -- our personal driveway for our home. We just put in new black top in October of '13. #19 -- this driveway is very essential for the large equipment in & out. Also used for semi's and big trucks. It is also the drive for our shop. We recommend paving the shoulders to make it safer for lage farm equipment to move over as vehicles and emergency equipment are passing. March 21, 2014	Noted. Five driveways are not needed to access the owner's properties. Removing and consolidating accesses to achieve WisDOT standards will improve safety on US 12.
Ida Moran	W6915 Hoard Rd, Fort Atkinson			We need both driveways (Hwy 12 & Hoard Rd) because we have a large 18-wheel truck that comes in and out. I don't think there has been any problems from the driveways that is here going out to Hwy 12 (4). There has been problems at the intersection of 12 & C/Hoard Road. By closing driveways that would only add to the problem at 12 & County C/Hoard Road. Thank you.	Noted. Access #198 is less than 200 feet from the US 12/Hoard Road intersection and should be closed. Property owner has sufficent access to US 12 via access on Hoard Road.

Public Involvement Meeting Comment Form

Project ID: 3080-00-09
US 12 Safety and Operations Analyses,
Corridor and Access Management Study
US 12 – County N to WIS 26
Dane and Jefferson Counties

Please place this form in the comment box or mail by April 1, 2014 to the address on the back of this sheet. Comments can also be e-mailed to franklin.marcos@dot.wi.gov. Your comments will assist us to refine study recommendations that will serve the needs of the traveling public and local communities in the US 12 corridor. Your input is welcome and appreciated throughout the study process.

Name: CARL ZENTNER

Address: 713 ROUTE ST

Phone Number (optional): 920-563-6159

Email Address (optional):

Please Print Comments (include additional sheets if necessary)

1. There is a missing access point complete with curb + gutter with concrete apron directly south of labled access points 175 + 176. This access point is important because the hill + topography on the property makes the far east part of the property very difficult to access.

2. To combine

The information in this document including names, addresses, phone numbers, e-mail addresses, and signatures is not confidential, and may be subject to disclosure upon request, pursuant to the requirements of the Wisconsin open records law, sections 19.31 – 19.39 of the Wisconsin Statutes.

Public Involvement Meeting Comment Form

Project ID: 3080-00-09
US 12 Safety and Operations Analyses,
Corridor and Access Management Study
US 12 – County N to WIS 26
Dane and Jefferson Counties

Please place this form in the comment box or mail by April 1, 2014 to the address on the back of this sheet. Comments can also be e-mailed to franklin.marcos@dot.wi.gov. Your comments will assist us to refine study recommendations that will serve the needs of the traveling public and local communities in the US 12 corridor. Your input is welcome and appreciated throughout the study process.

Name: CARL ZENTNER

Address: 713 CLOUTE ST

Phone Number (optional): 920 563-6159

Email Address (optional): ZENTNER C M. @ mail

Please Print Comments (include additional sheets if necessary)

The two open squares on the western edge (169) & (171) of my property are access to two different ownerships. Mr. Johnson, the foreman on the last regrading Hwy 12, suggested joint ownership (strongly encouraged). I rejected his suggestions because these call for a great deal of fill for (169) to get it up to level with (171). Shared driveways always produce maintainence problems for the owners in the future. I understand it is one small "improvement" in the eye of the D.O.T.

The information in this document including names, addresses, phone numbers, e-mail addresses, and signatures is not confidential, and may be subject to disclosure upon request, pursuant to the requirements of the Wisconsin open records law, sections 19.31 – 19.39 of the Wisconsin Statutes.

Public Involvement Meeting Comment Form

Project ID: 3080-00-09
US 12 Safety and Operations Analyses,
Corridor and Access Management Study
US 12 – County N to WIS 26
Dane and Jefferson Counties

Please place this form in the comment box or mail by April 1, 2014 to the address on the back of this sheet. Comments can also be e-mailed to franklin.marcos@dot.wi.gov. Your comments will assist us to refine study recommendations that will serve the needs of the traveling public and local communities in the US 12 corridor. Your input is welcome and appreciated throughout the study process.

Name: Art Mikkelson

Address: 3428 Thorstad Ln., Deerfield

Phone Number (optional): 764-5574

Email Address (optional):

Please Print Comments (include additional sheets if necessary)

re: traffic from Schusters Playtime Farm being transferred to Thorstad Ln. Too much traffic with farming operations going for us as is. Refigure it please!!

The information in this document including names, addresses, phone numbers, e-mail addresses, and signatures is not confidential, and may be subject to disclosure upon request, pursuant to the requirements of the Wisconsin open records law, sections 19.31 – 19.39 of the Wisconsin Statutes.

Public Involvement Meeting Comment Form

Project ID: 3080-00-09
US 12 Safety and Operations Analyses,
Corridor and Access Management Study
US 12 – County N to WIS 26
Dane and Jefferson Counties

Please place this form in the comment box or mail by April 1, 2014 to the address on the back of this sheet. Comments can also be e-mailed to franklin.marcos@dot.wi.gov. Your comments will assist us to refine study recommendations that will serve the needs of the traveling public and local communities in the US 12 corridor. Your input is welcome and appreciated throughout the study process.

Name: ANDY MIKKELSON

Address: DEERFIELD

Phone Number (optional):

Email Address (optional): mikkelso@cae.wisc.edu

Please Print Comments (include additional sheets if necessary)

REGARDING DRIVEWAY/ACCESS "PR6" ACROSS FROM JOHN DEERE LANE, WHY DOES "OPTIONAL" ROUTE GO WEST TO THORSTAD LANE? IT LOOKS TO BE CLOSER TO RUN IT EAST TO HWY W; ESPECIALLY WITH THE HIGH SEASONAL USE THAT "DRIVEWAY" PR6 GETS DURING THE SUMMER AND FALL. THIS WOULD MAKE OPTIMAL USE OF THE TURN LANES AT THE W/12&18 INTERSECTION. AND I SAY "DRIVEWAY" BECAUSE IT IS BEING USED ESSENTIALLY AS A COMMERCIAL DRIVEWAY, AND MOST WOULD AGREE.

The information in this document including names, addresses, phone numbers, e-mail addresses, and signatures is not confidential, and may be subject to disclosure upon request, pursuant to the requirements of the Wisconsin open records law, sections 19.31 – 19.39 of the Wisconsin Statutes.

Public Involvement Meeting Comment Form

Project ID: 3080-00-09
US 12 Safety and Operations Analyses,
Corridor and Access Management Study
US 12 – County N to WIS 26
Dane and Jefferson Counties

Please place this form in the comment box or mail by April 1, 2014 to the address on the back of this sheet. Comments can also be e-mailed to franklin.marcos@dot.wi.gov. Your comments will assist us to refine study recommendations that will serve the needs of the traveling public and local communities in the US 12 corridor. Your input is welcome and appreciated throughout the study process.

Name: Steve Struss

Address: 313 South St. Cambridge WI 53523

Phone Number (optional): 608-228-2119

Email Address (optional): struss@frontier.com

Please Print Comments (include additional sheets if necessary)

The village of Cambridge is planning to install a safe crossing on Hwy 18 just east of the intersection with Hwy 12. We would like to coordinate this with the DOT (and get the proper permits) to do this correctly. Who should we work with for this project?

Thanks,
Steve Struss

The information in this document including names, addresses, phone numbers, e-mail addresses, and signatures is not confidential, and may be subject to disclosure upon request, pursuant to the requirements of the Wisconsin open records law, sections 19.31 – 19.39 of the Wisconsin Statutes.

Public Involvement Meeting Comment Form

Project ID: 3080-00-09
US 12 Safety and Operations Analyses,
Corridor and Access Management Study
US 12 – County N to WIS 26
Dane and Jefferson Counties

Please place this form in the comment box or mail by April 1, 2014 to the address on the back of this sheet. Comments can also be e-mailed to franklin.marcos@dot.wi.gov. Your comments will assist us to refine study recommendations that will serve the needs of the traveling public and local communities in the US 12 corridor. Your input is welcome and appreciated throughout the study process.

Name: MIKE DAY - CAMBRIDGE PIGGLY WIGGLY

Address: 100 JEFFERSON ST

Phone Number (optional): 608 423-4004 608 438-4984

Email Address (optional): MDAY@SHOPTHEPIG.COM

Please Print Comments (include additional sheets if necessary)

WOULD LIKE TO BE CONTACTED WITH ~~[illegible]~~ ANY INFORMATION IF THERE IS ANY DEVELOPMENT NEAR THE INTERSECTIONS OF HIGHWAY 12 & 18 & 134

The information in this document including names, addresses, phone numbers, e-mail addresses, and signatures is not confidential, and may be subject to disclosure upon request, pursuant to the requirements of the Wisconsin open records law, sections 19.31 – 19.39 of the Wisconsin Statutes.

Public Involvement Meeting Comment Form

Project ID: 3080-00-09
US 12 Safety and Operations Analyses,
Corridor and Access Management Study
US 12 – County N to WIS 26
Dane and Jefferson Counties

Please place this form in the comment box or mail by April 1, 2014 to the address on the back of this sheet. Comments can also be e-mailed to franklin.marcos@dot.wi.gov. Your comments will assist us to refine study recommendations that will serve the needs of the traveling public and local communities in the US 12 corridor. Your input is welcome and appreciated throughout the study process.

Name: Shelley Schroedl

Address: 6597 Hwy G.

Phone Number (optional):

Email Address (optional):

Please Print Comments (include additional sheets if necessary)

Coming out of Fort Atkinson going west on 12 have found rt turn lane to Hwy G to be "odd". Either seems too short or something. Might have something to do with the people wanting to come out from G. Kind of a touchy place.

The information in this document including names, addresses, phone numbers, e-mail addresses, and signatures is not confidential, and may be subject to disclosure upon request, pursuant to the requirements of the Wisconsin open records law, sections 19.31 – 19.39 of the Wisconsin Statutes.

Public Involvement Meeting Comment Form

Project ID: 3080-00-09
US 12 Safety and Operations Analyses,
Corridor and Access Management Study
US 12 – County N to WIS 26
Dane and Jefferson Counties

Please place this form in the comment box or mail by April 1, 2014 to the address on the back of this sheet. Comments can also be e-mailed to franklin.marcos@dot.wi.gov. Your comments will assist us to refine study recommendations that will serve the needs of the traveling public and local communities in the US 12 corridor. Your input is welcome and appreciated throughout the study process.

Name: Eric Wittwer

Address: 102 W. North St. Cambridge 53523

Phone Number (optional): 414 840 1070

Email Address (optional): ekwittwer@hotmail.com

Please Print Comments (include additional sheets if necessary)

My concern is the occurence of accidents where a vehicle crosses the centerline and causes head-on or near head on collisions. ~~the~~ It was stated that weather was a factor - weather will ALWAYS be a factor in Wisconsin. Can you statistically determine areas where accidents occur and address them in the short term. Nora Rd intersection, AB intersection, W intersection are dangerous especially in poor weather. What can be done "cheaply" ~~and~~ to address these issues short term?

The information in this document including names, addresses, phone numbers, e-mail addresses, and signatures is not confidential, and may be subject to disclosure upon request, pursuant to the requirements of the Wisconsin open records law, sections 19.31 – 19.39 of the Wisconsin Statutes.

Public Involvement Meeting Comment Form

Project ID: 3080-00-09
US 12 Safety and Operations Analyses,
Corridor and Access Management Study
US 12 – County N to WIS 26
Dane and Jefferson Counties

Please place this form in the comment box or mail by April 1, 2014 to the address on the back of this sheet. Comments can also be e-mailed to franklin.marcos@dot.wi.gov. Your comments will assist us to refine study recommendations that will serve the needs of the traveling public and local communities in the US 12 corridor. Your input is welcome and appreciated throughout the study process.

Name: Jeffrey Quamme

Address: 232 Heine Street, Deerfield, 53531

Phone Number (optional): 608-576-6671

Email Address (optional): j.quamme@charter.net

Please Print Comments (include additional sheets if necessary)

I like the option(s) shown at the intersection of C.TH. W & Oak Park Road. My concern is that this should be done as soon as possible. The current intersection does not have adequate deceleration/acceleration lanes and the traffic movement currently happening with vehicles moving around left turning vehicles is extremely dangerous. Not to mention it happens at a high rate of speed. I have been observing increasing traffic on the side roads as well as on USH 12 & 18. If the improvements are not given a high priority, I feel this intersection will begin to see an increase in traffic incidents. I also am convinced that the New 73 interchange will not decrease the use of Oak Park as a front door ~~the~~ to Deerfield. A large area to the west of Deerfield was annexed in 2008 and the development will accelerate the use of Oak Park in upcoming years.

The information in this document including names, addresses, phone numbers, e-mail addresses, and signatures is not confidential, and may be subject to disclosure upon request, pursuant to the requirements of the Wisconsin open records law, sections 19.31 – 19.39 of the Wisconsin Statutes.

Public Involvement Meeting Comment Form

Project ID: 3080-00-09
US 12 Safety and Operations Analyses,
Corridor and Access Management Study
US 12 – County N to WIS 26
Dane and Jefferson Counties

Please place this form in the comment box or mail by April 1, 2014 to the address on the back of this sheet. Comments can also be e-mailed to franklin.marcos@dot.wi.gov. Your comments will assist us to refine study recommendations that will serve the needs of the traveling public and local communities in the US 12 corridor. Your input is welcome and appreciated throughout the study process.

Name: KRIS HAMPTON

Address: 3310 CTY N COTTAGE GROVE

Phone Number (optional): 608-279-2279

Email Address (optional): AGX44@HERR.COM

Please Print Comments (include additional sheets if necessary)

ARE YOU DOING ANYTHING TO MAKE THE HWY SAFER FOR FARM MACHINERY ON THE ROADWAY.

MAKE THE IMPROVEMENTS TO 12&18/NORA RD.

The information in this document including names, addresses, phone numbers, e-mail addresses, and signatures is not confidential, and may be subject to disclosure upon request, pursuant to the requirements of the Wisconsin open records law, sections 19.31 – 19.39 of the Wisconsin Statutes.

Public Involvement Meeting Comment Form

Project ID: 3080-00-09
US 12 Safety and Operations Analyses,
Corridor and Access Management Study
US 12 – County N to WIS 26
Dane and Jefferson Counties

Please place this form in the comment box or mail by April 1, 2014 to the address on the back of this sheet. Comments can also be e-mailed to franklin.marcos@dot.wi.gov. Your comments will assist us to refine study recommendations that will serve the needs of the traveling public and local communities in the US 12 corridor. Your input is welcome and appreciated throughout the study process.

Name: Stanley Lien

Address: 332 Kish Cambridge

Phone Number (optional): 423 4012

Email Address (optional): N/A

Please Print Comments (include additional sheets if necessary)

Look at (from the east) to the Co Line go North down Simonson Street to 18 vacated 12+18 intersect on NW corner of Village give the village 12 thru the village

The information in this document including names, addresses, phone numbers, e-mail addresses, and signatures is not confidential, and may be subject to disclosure upon request, pursuant to the requirements of the Wisconsin open records law, sections 19.31 – 19.39 of the Wisconsin Statutes.

Public Involvement Meeting Comment Form

Project ID: 3080-00-09
US 12 Safety and Operations Analyses,
Corridor and Access Management Study
US 12 – County N to WIS 26
Dane and Jefferson Counties

Please place this form in the comment box or mail by April 1, 2014 to the address on the back of this sheet. Comments can also be e-mailed to franklin.marcos@dot.wi.gov. Your comments will assist us to refine study recommendations that will serve the needs of the traveling public and local communities in the US 12 corridor. Your input is welcome and appreciated throughout the study process.

Name: Tim Adas / Jenna Adas

Address: W9477 Us Hwy 12

Phone Number (optional): 608 886-3697

Email Address (optional): timllmlb@yahoo.com

Please Print Comments (include additional sheets if necessary)

We would prefer not to loose our historic house where we have access to driving range and golf course where I (Tim) work. Under the long range plan we lose our house and convience to my work. Although we understand the frontage road further increases safety, we see very few accidents (0 in 3 yrs) and feel speed limit enforcement could go a long way.

The information in this document including names, addresses, phone numbers, e-mail addresses, and signatures is not confidential, and may be subject to disclosure upon request, pursuant to the requirements of the Wisconsin open records law, sections 19.31 – 19.39 of the Wisconsin Statutes.

Public Involvement Meeting Comment Form

Project ID: 3080-00-09
US 12 Safety and Operations Analyses,
Corridor and Access Management Study
US 12 – County N to WIS 26
Dane and Jefferson Counties

Please place this form in the comment box or mail by April 1, 2014 to the address on the back of this sheet. Comments can also be e-mailed to franklin.marcos@dot.wi.gov. Your comments will assist us to refine study recommendations that will serve the needs of the traveling public and local communities in the US 12 corridor. Your input is welcome and appreciated throughout the study process.

Name: Bonnie Hamer

Address: W6844 Hwy 12, Fort Atkinson, WI

Phone Number (optional):

Email Address (optional):

Please Print Comments (include additional sheets if necessary)

Yes I realize there is a problem with excessive driveways between Hwy 26 Bypass and Hoard Road which present a problem but think a speed zone could be in place to CTHCN as a temporary fix Drivers come from a 2-lane (35 mph) narrowing down to one lane and just speed up to 55mph (more like 60/65) where all these turnoffs are.

The information in this document including names, addresses, phone numbers, e-mail addresses, and signatures is not confidential, and may be subject to disclosure upon request, pursuant to the requirements of the Wisconsin open records law, sections 19.31 – 19.39 of the Wisconsin Statutes.

Public Involvement Meeting Comment Form

Project ID: 3080-00-09
US 12 Safety and Operations Analyses,
Corridor and Access Management Study
US 12 – County N to WIS 26
Dane and Jefferson Counties

Please place this form in the comment box or mail by April 1, 2014 to the address on the back of this sheet. Comments can also be e-mailed to franklin.marcos@dot.wi.gov. Your comments will assist us to refine study recommendations that will serve the needs of the traveling public and local communities in the US 12 corridor. Your input is welcome and appreciated throughout the study process.

Name: Roger C. Rude

Address: W9156 Hwy 12, Cambridge, WI 53523

Phone Number (optional): 608-423-3190

Email Address (optional):

Please Print Comments (include additional sheets if necessary)

① Place survey point – southeast corner of my property. And survey point near driveway by the house.

② Need name + address ~~for~~ phone number of over weight truck permits –

The information in this document including names, addresses, phone numbers, e-mail addresses, and signatures is not confidential, and may be subject to disclosure upon request, pursuant to the requirements of the Wisconsin open records law, sections 19.31 – 19.39 of the Wisconsin Statutes.

Public Involvement Meeting Comment Form

Project ID: 3080-00-09
US 12 Safety and Operations Analyses,
Corridor and Access Management Study
US 12 – County N to WIS 26
Dane and Jefferson Counties

Please place this form in the comment box or mail by April 1, 2014 to the address on the back of this sheet. Comments can also be e-mailed to franklin.marcos@dot.wi.gov. Your comments will assist us to refine study recommendations that will serve the needs of the traveling public and local communities in the US 12 corridor. Your input is welcome and appreciated throughout the study process.

Name: Bill & Karen Gottschalk

Address: W6746 Hoard Rd Fort Atkinson, WI 53538

Phone Number (optional):

Email Address (optional): Billgo@Alphaacs.com

Please Print Comments (include additional sheets if necessary)

Please Send Study Display Maps
& Web Site information.

The information in this document including names, addresses, phone numbers, e-mail addresses, and signatures is not confidential, and may be subject to disclosure upon request, pursuant to the requirements of the Wisconsin open records law, sections 19.31 – 19.39 of the Wisconsin Statutes.

Richard Kedzior

From: Marcos, Franklin - DOT <Franklin.Marcos@dot.wi.gov>
Sent: Friday, February 21, 2014 8:21 AM
To: Chuck Wade; Richard Kedzior
Subject: FW: Highway 12 in Jefferson County

FYI

From: Gail E Vorlob [mailto:gail.e.vorlob@ampf.com]
Sent: Friday, February 21, 2014 8:04 AM
To: Marcos, Franklin - DOT
Subject: Highway 12 in Jefferson County

Mr Marcos

I read about your public meeting in Cambridge on Tuesday, March 4 regarding Highway 12 in Jefferson and Dane counties. I cannot attend so I thought I would email you my thoughts.

I drive the route between Fort Atkinson and Cambridge daily to work. Almost daily I witness some of the worst traffic situations imaginable. Especially people passing on double yellow lines where drivers coming toward us have to head for the shoulder to miss a head-on collision. I won't even go into the tailgating situation. What we really need is at least one passing lane. I am amazed that there are not more accidents on that stretch of road.

Thank you-Gail Vorlob

P.S. If you like the work we do, introduce us to a friend or family member who might benefit from meeting with us.
. . . . . .

Gail E Vorlob
Associate Financial Advisor

Ameriprise Financial Services, Inc
113 Spring St, PO Box 442
Cambridge WI 53523

O: 920-563-2374 or 888-568-2374
F: 920-563-9315
Learn more at ameripriseadvisors.com/gail.e.vorlob

We shape financial solutions for a lifetime®

An Ameriprise Financial Franchise. Ameriprise Financial Services, Inc. offers financial advisory services, investments, insurance and annuity products. *RiverSource®* and *Columbia Management ®* products are offered by affiliates of Ameriprise Financial Services, Inc., Member FINRA and SIPC.

This email was sent to you by the Ameriprise Advisor Center, Ameriprise Financial Services, Inc., to provide information you requested or important information about your account. You may receive customer service emails even if you have requested not to receive email marketing offers from Ameriprise Financial Services, Inc.

********** "This message and any attachments are solely for the intended recipient and may contain confidential or privileged information. If you are not the intended recipient, any disclosure, copying, use, or distribution of the information included in this message and any attachments is prohibited. If you have received this communication in error, please notify us by reply e-mail and immediately and permanently delete this message

Public Involvement Meeting Comment Form

Project ID: 3080-00-09
US 12 Safety and Operations Analyses,
Corridor and Access Management Study
US 12 – County N to WIS 26
Dane and Jefferson Counties

Please place this form in the comment box or mail by April 1, 2014 to the address on the back of this sheet. Comments can also be e-mailed to franklin.marcos@dot.wi.gov. Your comments will assist us to refine study recommendations that will serve the needs of the traveling public and local communities in the US 12 corridor. Your input is welcome and appreciated throughout the study process.

Name: James Skaar (Landowner)

Address: 1893 Hwy 12 & 18 Cottage Grove.

Phone Number (optional): 608-764-5316

Email Address (optional):

Please Print Comments (include additional sheets if necessary)

Designated areas to be considered for removal pertaining to our farming operation & personal home.
#14 & #17 - field roads necessary for our operation for the land on those farms. They were installed as necessary drives when the highway was done in '98
#18 - Our personal driveway for our home. We just put in new black top in Oct. of '13.
#19 - This drive way is very essential for the large equipment in & out. Also used for Dom's & big trucks. It is also the drive for our shop.
We recommend paving the shoulders to make it safer for large farm equipment to move over as vehicles and emerging equipment are passing

The information in this document including names, addresses, phone numbers, e-mail addresses, and signatures is not confidential, and may be subject to disclosure upon request, pursuant to the requirements of the Wisconsin open records law, sections 19.31 – 19.39 of the Wisconsin Statutes.

March 21, 2014

Public Involvement Meeting Comment Form

Project ID: 3080-00-09
US 12 Safety and Operations Analyses,
Corridor and Access Management Study
US 12 – County N to WIS 26
Dane and Jefferson Counties

Please place this form in the comment box or mail by April 1, 2014 to the address on the back of this sheet. Comments can also be e-mailed to franklin.marcos@dot.wi.gov. Your comments will assist us to refine study recommendations that will serve the needs of the traveling public and local communities in the US 12 corridor. Your input is welcome and appreciated throughout the study process.

Name: IDA MORAN

Address: W 6915 Hoard RD Fort Atkinson WI 53538

Phone Number (optional):

Email Address (optional):

Please Print Comments (include additional sheets if necessary)

We Need Both Driveways (Hwy 12 + Hoard RD) Because we have a Large 18wheel Truck That Comes in + out.

I Don't Think There has been Any Problems from The Drive ways That is here going out to Hwy 12 (4) There has been Problems At The intersection of 12 + C/Hoard RD.

By Chosing Driveways That would Only Add To The Problem at 12 + County C/ Hoard Rd.

Thank you.

The information in this document including names, addresses, phone numbers, e-mail addresses, and signatures is not confidential, and may be subject to disclosure upon request, pursuant to the requirements of the Wisconsin open records law, sections 19.31 – 19.39 of the Wisconsin Statutes.

Marcos, Franklin - DOT

From: ssgasper [ssgasper@frontier.com]
Sent: Tuesday, February 18, 2014 10:53 AM
To: Marcos, Franklin - DOT
Subject: Re: US 12 Safety and Operations Corridor Study

Thank you for emailing Map 7. The map shows the project will have no direct impact on State Farm Road at the location of our driveway. That could be the reason why we were not included in the mailing list for invitations to the PIM.

A big thank you too for setting things straight regarding the unfounded rumor that a Cambridge bypass is being considered under the project. It's interesting that misinformation gets propagated so easily through well intentioned but misinformed people who are involved in local affairs. It's good that we are now aware that the rumor of a Cambridge bypass is not true, it lays to rest a lot of concerns about how such a bypass would have affected our property and others along State Farm Road.

Having lived in the area for a number of years, these are some areas that we see that are of concern from safety and operational standpoints.

1. The intersections of Highway 73 and Highways 12 & 18 need attention from an operational aspect. It is very difficult for Highway 73 traffic to safely and efficiently enter onto Highways 12 & 18, especially during periods of heavy traffic volume. I noted in the material you emailed to us that those intersections are being dealt with under the I-39/I90 project and are not part of the Highway 12 corridor study.

2. The Clear View and State Farm Road intersections need to be addressed, especially for east bound traffic. The close proximity of those intersections coupled with the short distance separating the east bound turning lane for Clear View and left turn bypass lane for State Farm Road cause confusion and create a safety hazard.

3. The intersection where Highway 18 branches toward Jefferson at the northwest side of Cambridge. There is a high volume of truck traffic at that intersection, many of the trucks are large tractor/semitrailer units with five or more axles. Due to the configuration of the intersection, it is extremely difficult of even those units of a legal size to negotiate a left turn onto east bound Highway 18. On many occasions I have observed drivers being forced to run the right front wheel over the safety island in order to make the turn, especially if a vehicle is stopped at the stop line in the left turn lane on the west bound side of Highway 18.

A left turn for east bound traffic at that intersection is a challenge for legal sized units operating under normal traffic conditions. It is a nightmare for drivers of loads operating under overlength or overwidth permits.

4. The intersection of Potters Road and Highway 18 at the east edge of the Cambridge High School athletic fields. Though there are turning and bypass lanes at Simonsen Street on the west side of the athletic fields, there are no such lanes at

Potters Road. Not only does the intersection at Potters Road present more of a safety hazard due to a knoll just to the east of the intersection, it is also carries much more school related traffic than does the intersection at Simonsen Street.

The primary parking lot and entrances for school and athletic activities are located on the Potters Road side of the complex. Therefore the Potters Road intersection carries the bulk of traffic for buses, students, parents and visitors.

That intersection is in critical need of improvement from both operational and safety standpoints. Needed improvements include reducing the knoll to provide a better view to the east, add a right turn for east bound traffic and a bypass lane for west bound traffic on Highway 18.

Thanks for giving us the straight scoop on the Highway 12 project. We hope this bit of input from our observations of the movement of traffic and highway designs is helpful.

Have a good day,

Steve Gasper

----- Original Message -----
From: Marcos, Franklin - DOT
To: 'ssgasper'
Sent: Tuesday, February 18, 2014 8:52 AM
Subject: RE: US 12 Safety and Operations Corridor Study

Attached is Map 7. This US 12 Corridor Study is attempting to preserve the corridor as a two lane facility while improving safety and addressing operational issues at several intersection. We will not be studying a Cambridge bypass in this effort! If you have any other questions, feel free to contact me.

Franco

From: ssgasper [mailto:ssgasper@frontier.com]
Sent: Monday, February 17, 2014 4:43 PM
To: Marcos, Franklin - DOT
Subject: Re: US 12 Safety and Operations Corridor Study

Thank you for quickly responding to my inquiry. Thank you also for following up on the mailing list for invitations to the March 4 PIM. The businessman who informed us of the meeting gave a photocopy of the invitation to us so we do have a copy in addition to the notice in your message. However, we certainly do want to be included on the list for any future mailings that are sent out regarding the project.

The guy who told us of the project and the PIM also stated that one of the proposed routes for bypassing Cambridge would relocate Highway 12 to be north of and parallel with State Farm Road. Is that relocation of Highway 12 being considered as an option in the project?

Our home is located about a mile east of the intersection of Highway 12 and State Farm Road. It is between Prairie Road and Highway 134 and is not encompassed in Map 6. Based on the narrative for Map 7, our home is included in the area shown in that map.

When you have an opportunity, please send Map 7.

Have a good day,

Steve Gasper

----- Original Message -----
From: Marcos, Franklin - DOT
To: 'ssgasper@frontier.com'
Cc: Bie, Michael - DOT
Sent: Monday, February 17, 2014 1:21 PM
Subject: US 12 Safety and Operations Corridor Study

Dear Mr. Gasper, we are having a Public Involvement Meeting (PIM) to present the recommendations and strategies that were developed for the US 12 Corridor Study. I apologized for you not receiving an invite in the mail for this PIM. I will follow-up with the consulting firm that generated the mailing list and mailed the invite letters. We have developed concept plans to improve safety and better manage access on the corridor. We will be presenting them on Tuesday, March 4, 2014 at Cambridge Elementary School. We will have an open house at 6:00 pm with a presentation starting at 6:30 pm. Please consider this an invitation to attend the meeting. Attached is a map (Map 6) of the State Farm Road concept drawing. The recommendations for State Farm road is on page 142 under Map 6. . We appreciate any suggestions, comments or concerns that you may have. Feel free to give me a call at 608-246-3860.

Franco

Marcos, Franklin - DOT

From: Bie, Michael - DOT
Sent: Monday, February 17, 2014 11:22 AM
To: Marcos, Franklin - DOT
Subject: FW: US 12 Corridor Study

Please contact Mr. Gasper directly. Thanks.

From: ssgasper [mailto:ssgasper@frontier.com]
Sent: Monday, February 17, 2014 10:53 AM
To: Bie, Michael - DOT
Subject: US 12 Corridor Study

Michael,

Our home address is 235 State Farm Road, Cambridge. We learned this morning from a local businessman that a potential Highway 12 & 18 bypass of Cambridge is being considered.

According to the information we received, the proposed bypass would parallel State Farm Road in the area where our home is located.

Please email maps, written descriptions or preliminary drawings showing the proposed route for the bypass.

Thank you,

Steve Gasper

Public Involvement Meeting Comment Form

Project ID: 3080-00-09
US 12 Safety and Operations Analyses,
Corridor and Access Management Study
US 12 – County N to WIS 26
Dane and Jefferson Counties

Please place this form in the comment box or mail by April 1, 2014 to the address on the back of this sheet. Comments can also be e-mailed to franklin.marcos@dot.wi.gov. Your comments will assist us to refine study recommendations that will serve the needs of the traveling public and local communities in the US 12 corridor. Your input is welcome and appreciated throughout the study process.

Name: CARL ZENTNER

Address: 713 ROUTE ST

Phone Number (optional): 920-563-6159

Email Address (optional):

Please Print Comments (include additional sheets if necessary)

1. There is a missing access point complete with curb + gutter with concrete apron directly south of labled access points 175 + 176. This access point is important because the hill + topography on the property makes the far east part of the property very difficult to access.

2. To combine

The information in this document including names, addresses, phone numbers, e-mail addresses, and signatures is not confidential, and may be subject to disclosure upon request, pursuant to the requirements of the Wisconsin open records law, sections 19.31 – 19.39 of the Wisconsin Statutes.

Appendix D Agriculture Operations Survey Report

Agriculture Operations Survey Report

US 12 Safety and Operations Analyses, Corridor and Access Management Study

Project ID 3080-00-09
(County N to WIS 26, Dane and Jefferson Counties)

TranSmart

Table of Contents

Introduction 1

Methodology 1

Survey Findings 2

Conclusion 9

Appendix 10

Tables

Table 1 Composition of owned and leased acreage of respondent farm operations 3

Figures

Figure 1 Percent of responding agricultural operators engaging in various farm activities 2
Figure 2 Percent of farm operations that operate on various acreages (sum of owned and leased lands) 3
Figure 3 Percent of respondents indicating the frequency per day that they access property adjacent to US 12 during peak seasons 8

Maps

Agriculture operations survey results: agricultural properties, travel routes and crossings points of US 12 4

Introduction

The Wisconsin Department of Transportation is undertaking a study of the US 12 corridor between County N in the town of Cottage Grove in Dane County on the corridor's western end and WIS 26 in Fort Atkinson in Jefferson County. The primary focus of the study is corridor preservation. The corridor is approximately 19.3 miles long and is identified as a Connector Route in WisDOT's statewide Connections 2030 Plan. As such, it is a route important to regional economic activity, connecting Whitewater, Fort Atkinson, Cambridge and Madison to Lake Geneva and other points south in Illinois and west beyond Madison.

The purpose of this study is to preserve the corridor for as long as possible and encompasses three phases: (1) data collection to create an inventory of existing environmental, social, and transportation-related conditions; (2) corridor analysis to determine traffic operations, safety, and deficiencies; and (3) development of strategies and recommendations for short-and long-term improvements, focusing on current and future local circulation and access management along the entire length of the corridor.

As part of the data collection phase of the study, a brief survey was developed for distribution to agricultural operators along the corridor. The survey was designed to gather information about current ownership patterns, road use by equipment, access and crossing points along US 12, employees, and shipments/deliveries.

Methodology

The agriculture survey consisted of a two-page form that included project and contact information, eleven brief questions, survey instructions, and space for general comments. The instructions explained how to mark the enclosed maps of the corridor so that participants could identify land parcels that they owned and leased for farm operations, farm operation access points connected directly to US 12, and intersections which they use to cross US 12. The survey questionnaire and consolidated questionnaire answers can be found in the Appendix.

Surveys were mailed to 50 agricultural operators along the corridor identified through the most recent tax assessment records. The survey packet was sent through the U.S. Postal Service by first-class mail and included a pre-addressed and postage-paid return envelope for mailing directly to TranSmart Technologies, Inc. In the survey instructions, participants were requested to return the completed survey forms and maps by May 31, 2011, approximately three weeks after the packet was mailed to them.

Survey Findings

The agriculture operations survey had a return rate of 42 percent (21 of 50 surveys mailed). Fifteen of the returned survey questionnaires were deemed to be valid. Six returned survey questionnaires were invalid because the respondents were not actively engaged in agriculture operations.

Determining the types of activities in which agricultural operators engage is a primary objective of the survey. As such, Question 2 asked participants, "What activities describe your farm?" Participants could choose more than one category among the following: dairy/cattle, pork/poultry, crops/produce, and other. Five participants chose more than one response category. Crops/produce was the most commonly identified category with 15 responses, or 93% of survey respondents. Dairy/cattle was the second most common response with four responses, or 29% of respondents. Both pork/poultry and other (which was identified as sheep) received only one response each. Figure 1 below illustrates the percentages of farms engaging in various agricultural activities in the US 12 corridor.

Figure 1 Percent of responding agricultural operators engaging in various farm activities

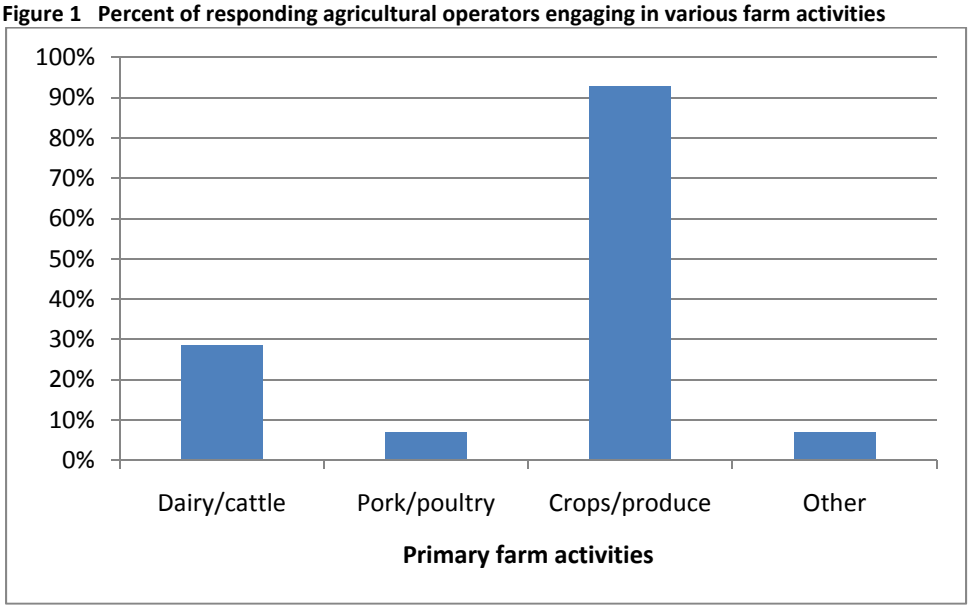

The mix of farm activities has ramifications for the types and amounts of agricultural vehicle traffic in a corridor. The presence of large dairy operations typically results in twice daily milk truck visits and frequent servicing by manure and feed trucks throughout the year. In contrast, vehicle traffic associated with crop and produce farms is much more seasonal in nature, with traffic peaks in spring and fall and virtually no traffic in winter.

Local weight restrictions during certain times of the year can limit the use of local road systems by heavy vehicles associated with farming activities, causing a greater need for access to US 12 during those months. Dairy operations are more sensitive to seasonal weight restrictions due to the need to transport manure for spreading on fields, often across large areas. Because most of the farms along the corridor are crop-oriented, this is less of a concern within the study area than in other regions of the state.

Figure 2 Percent of farm operations that operate on various acreages (sum of owned and leased lands)

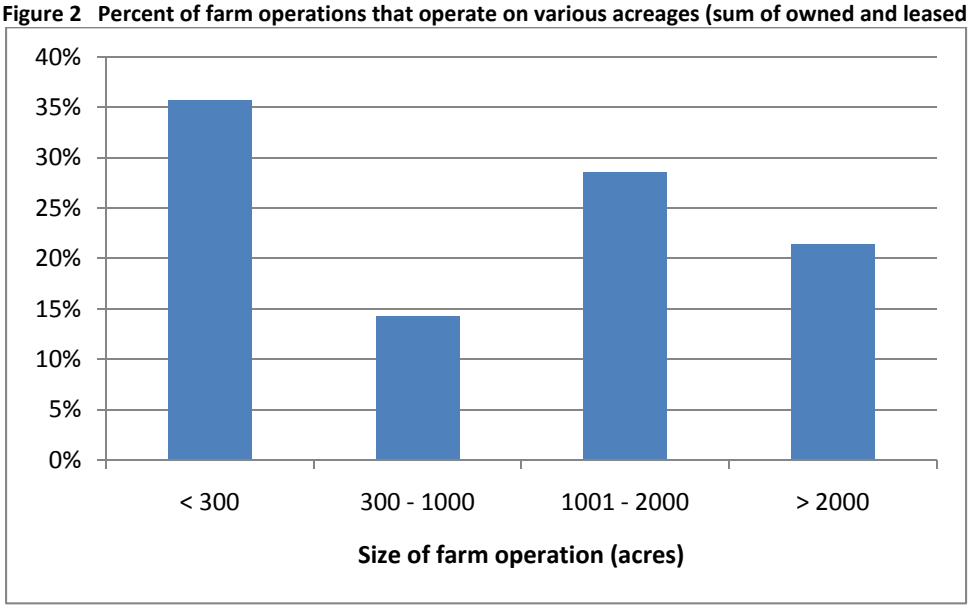

For the purposes of identifying the size and location of farms, the survey asked recipients to indicate the approximate acreage of their farms. Depending on the size and type of farm operation and the dispersion of farmed parcels, travel patterns and highway use can vary widely. Thirty-six percent of respondents indicated that they farmed less than 300 acres, three respondents (20 percent) indicated they farmed 300 to 1,000 acres, four indicated they farmed 1,000 to 2,000 acres, and three respondents farmed more than 2,000 acres. Figure 2 above indicates the sum of all lands that are farmed by survey respondents, while table 1 below indicates the composition of owned and leased acreage for each responding farm operator. Six farm operators lease at least 1,000 acres, creating very large and dispersed farm operations.

Table 1 Composition of owned and leased acreage of respondent farm operations

Survey respondent	Owned acreage	Leased acreage	Leased of total (%)	Total acreage
1	300	200	40	500
2	259	0	0	259
3	1000	1000	50	2000
5	500	1500	75	2000
6	69	0	0	69
7	0	1100	100	1100
8	1390	1000+	42	2390
9	800	700	47	1500
10	500+	2500+	83	3000+
11	775	1480	66	2255
12	95	0	0	95
13	218	0	0	218
15	400	150	27	550
16	300	0	0	300

Most respondents lease at least 40 percent of the land they farm. Leased acreage changes from time to time, while field access locations are fixed. These circumstances make it challenging to plan access for farming and accommodate access needs.

1 of 4

Agriculture Operations Survey Results

US 12 Corridor Study

1 in = 2000 ft

TranSmart

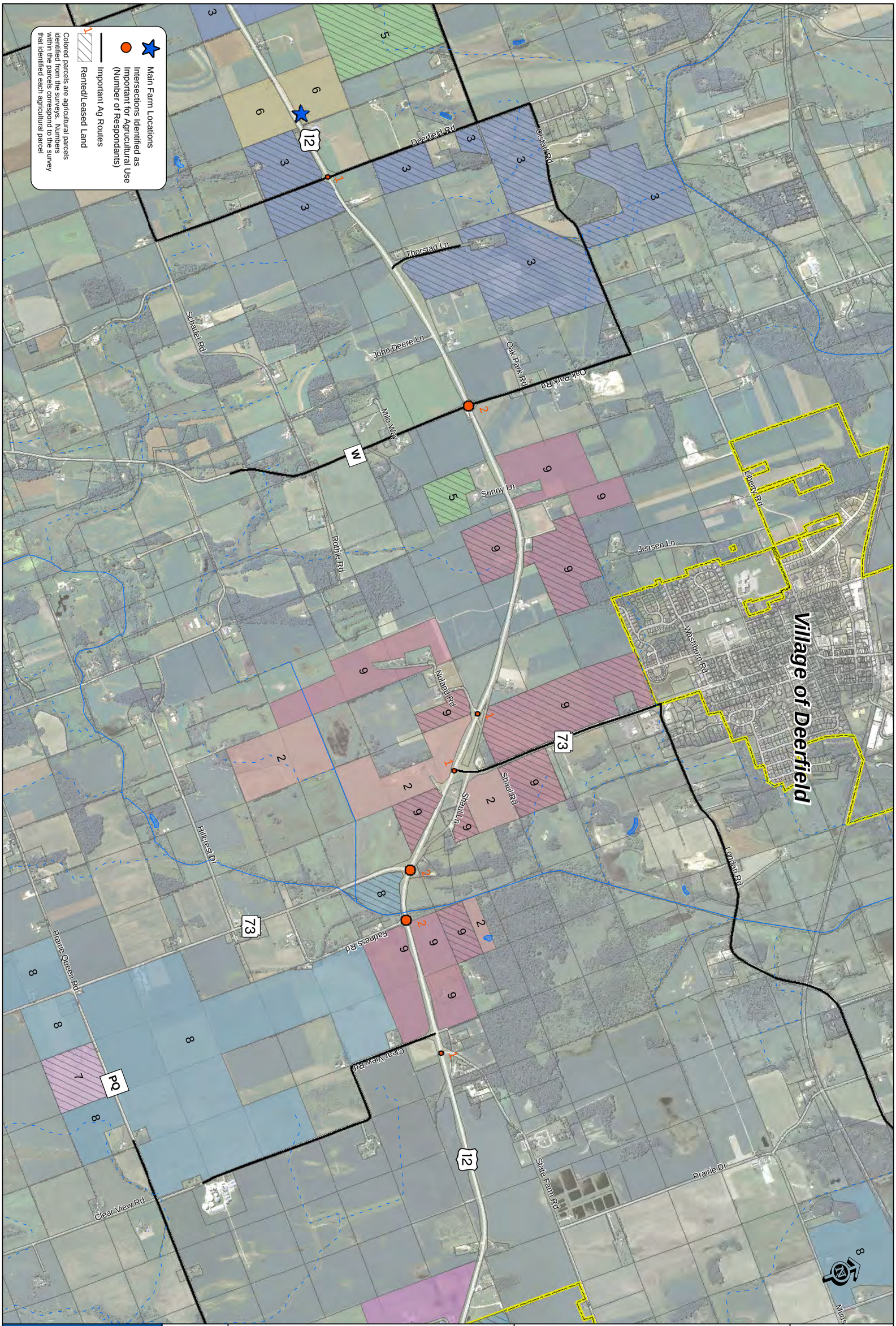

TranSmart	1 in = 2000 ft	US 12 Corridor Study	Agriculture Operations Survey Results	2 of 4

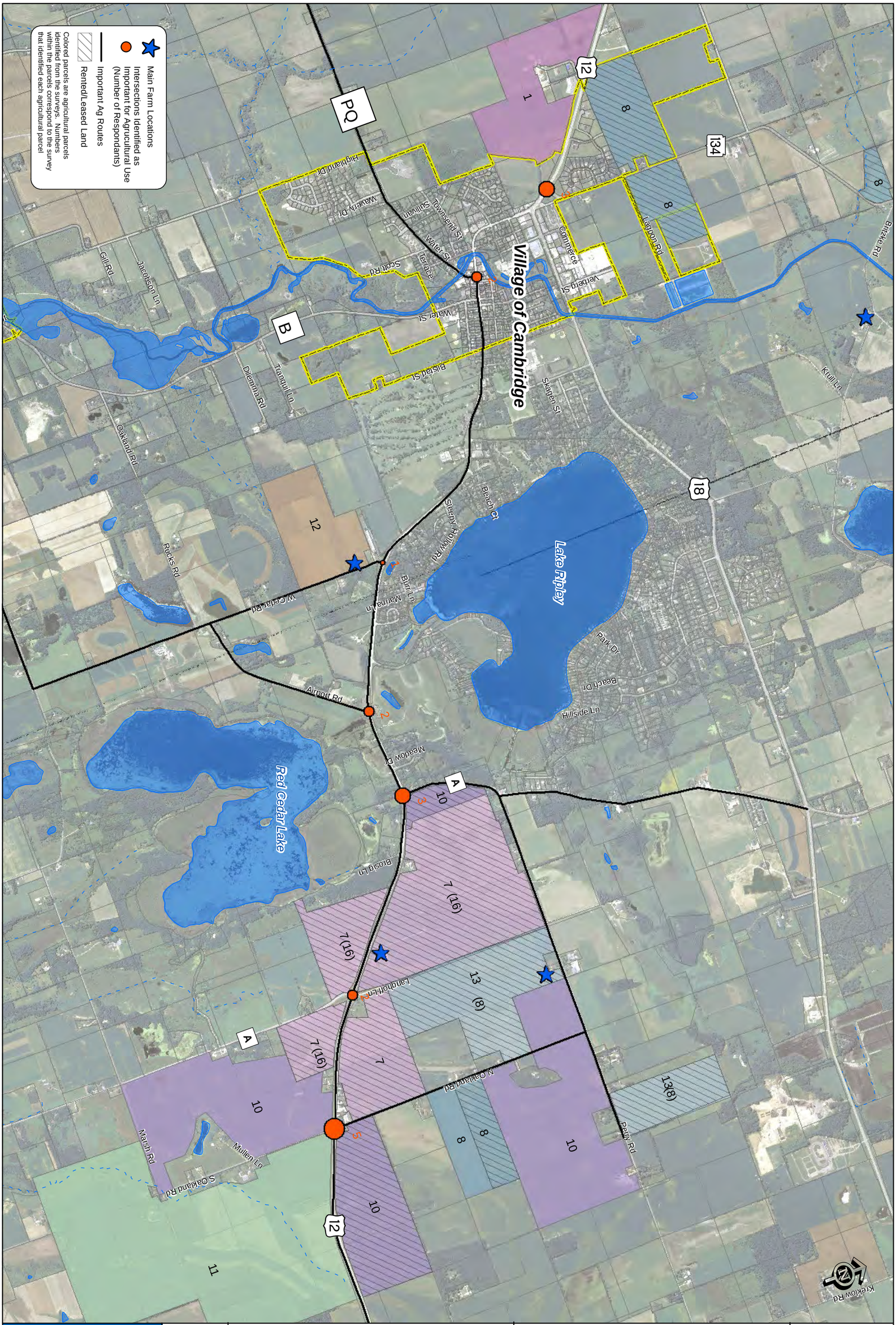

TranSmart	1 in = 2000 ft	US 12 Corridor Study	Agriculture Operations Survey Results	3 of 4

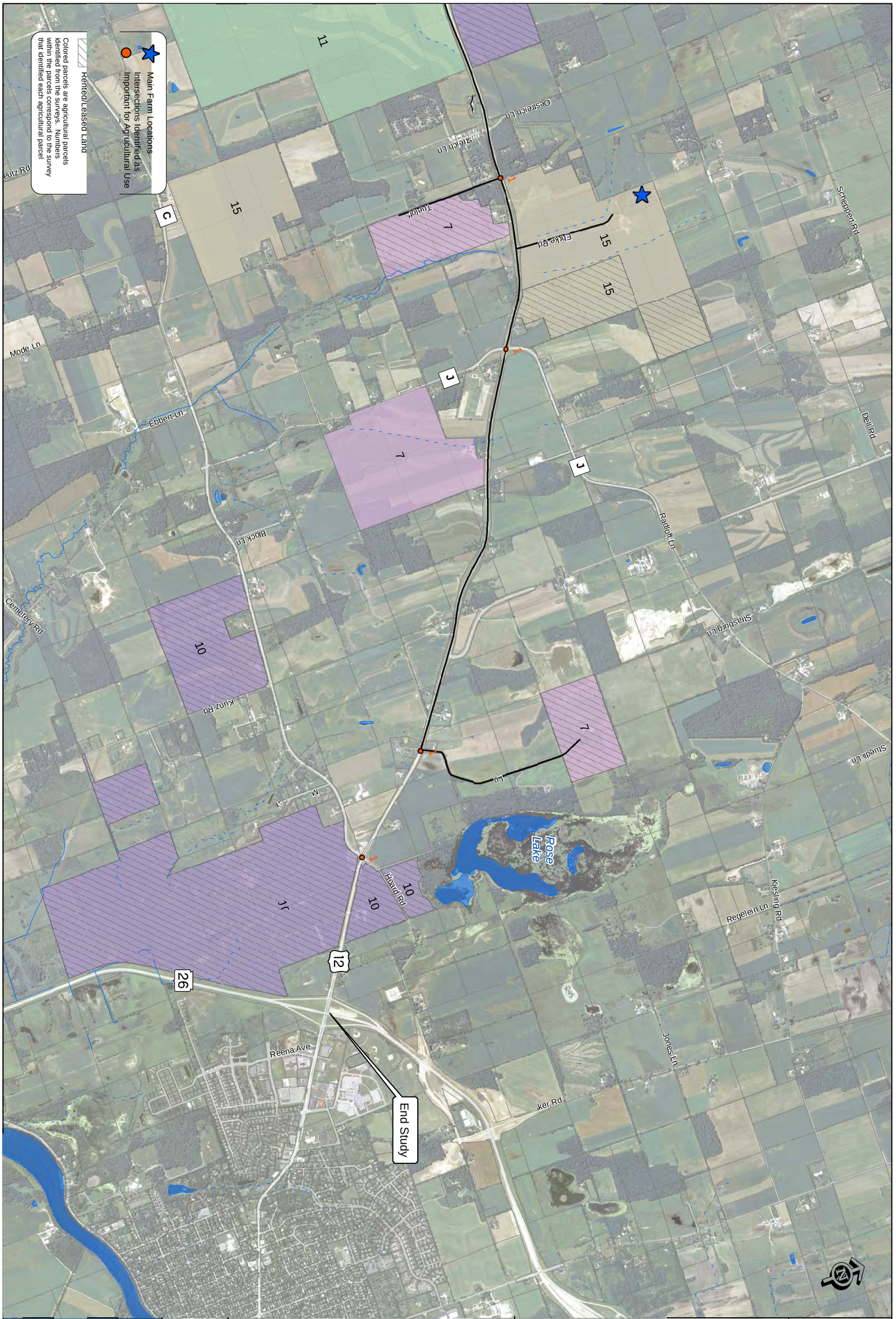

TranSmart	1 in = 2000 ft	US 12 Corridor Study	Agriculture Operations Survey Results	4 of 4

The survey included a set of maps depicting land parcels and state and local roadways. Survey recipients were instructed to indicate the location of their farm operations on the enclosed maps (which can be seen in the Appendix). Because a farm operation can be comprised of both owned and leased parcels, respondents were asked to identify parcels which they owned and those which they leased from others. Summary maps were created out of all the responses received and can be seen in the maps on the previous pages. These maps indicate properties owned and leased by respondents for farm operations and locations where US 12 is crossed to access agricultural parcels.

A series of questions in the survey were included to determine the importance of US 12 and local roads for accessibility and use during peak seasons. Fourteen of 15 respondents indicated that they use US 12 as a primary access to farm operations, while twelve indicated that US 12 is the only access to their main farm operation. One question asked how many times per day during peak seasons that participants accessed main farms located adjacent to US 12. A majority of respondents (six of 15, or 43%) reported that they used US 12 zero to ten times per day during peak seasons, three respondents (21 percent) said that they used it 11 to 20 times per day, two used it 21 to 30 times per day, none used it 31 to 40 times per day, and three used it more than 40 times per day during peak seasons. Figure 3 below shows the percentage of farms that access farm properties located adjacent to US 12 at different daily frequency levels.

Figure 3 Percent of respondents indicating the frequency per day that they access property adjacent to US 12 during peak seasons

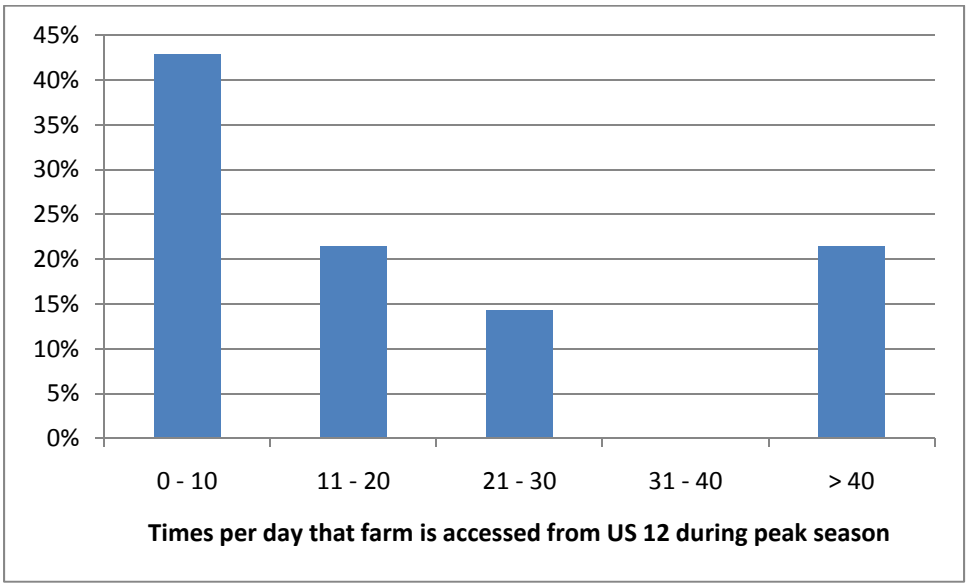

Nearly all farm operators who participated in the survey indicated that they must either cross or use US 12 to access farm operations. Most respondents (10 of 15) indicated that US 12 is the only access to their main farm operation, while several others must cross it to access owned or leased parcels located somewhere on the side of US 12 opposite to their main farm operation. For example, a farmer's main operations could be located south of US 12, but they would frequently cross US 12 (typically at a local road intersection) to access one or more parcels north of US 12. This situation is very common within the study corridor, and is graphically illustrated in the summary maps found in the previous pages.

Participants were also asked the origins of hired custom work—for tasks such as spraying, manure spreading, fertilizer application and harvesting—and the locations where their agricultural products were shipped. The origins of custom work establishments were identified as Deerfield (three responses), Johnson Creek (one), Sun Prairie (one), and London (one). Eleven respondents identified the grain storage and dairy processing locations to which they sent their goods; four respondents did not answer the question. Several of the respondents mentioned that they send their products to more than one location, depending on the product and other factors. Ten respondents indicated that their product is sent to Gavilon Grains (formerly Vasby's) in Cambridge; six send goods to Landmark Cooperative in Cottage Grove, one mentioned United Co-operative in Deerfield, one sends goods to Cooperative Plus, Inc., in Whitewater, and one sends milk to the Dean Foods processing plant in Sun Prairie. These responses indicate that most farmers use US 12 to get their goods to market within the region, within and beyond the study corridor.

Conclusion

Based on the survey results, US 12 is extremely important to agricultural operators in the corridor to access fields and transport farm inputs and products. Agricultural activities often introduce large slow-moving vehicles to the corridor, which cross the highway, move slowly along the highway or shoulder, and accelerate slowly to merge with faster-moving traffic. Alternatives analysis should examine the availability of access to alternative routes to US 12 to minimize these challenges.

Conflicts frequently arise from farm equipment traveling on the corridor. Primary access management considerations could include divergent vehicle speeds and vehicles turning at field and driveway access points and intersections. Therefore, the location of farm operations should be considered as part of any recommendations for access changes in order to minimize indirection for agricultural vehicles. Future decisions should balance agricultural needs with safety and operational needs along the corridor.

Appendix

US 12 Agriculture Survey

County N to WIS 26
Project ID 3080-00-09

The Wisconsin Department of Transportation, WisDOT (Southwest Region) is conducting a planning study of the US 12 corridor between County N in the town of Cottage Grove, Dane County, and WIS 26 in Fort Atkinson, Jefferson County. Early input from area farm operations is important to help identify farm equipment road use and connections across US 12. The survey is being sent to local farm owners and operators on the corridor and will take about fifteen minutes of your time to complete.

Please take a moment to answer a few brief questions on this page and mark the attached corridor map worksheets according to the instructions on the bottom of each page. *If you do not own or operate a farm or do not rent/lease land to a farm operation, check this box ☐ and return only this page.*

---

1. What is your name and/or the name of your farm operation? _____
2. What activities best describe your farm? (please circle primary activities)

   Dairy/Cattle Pork/Poultry Crops/Produce Other _____
3. On average approximately how many acres you **own:** _____and/or **rent/lease:**_____
4. Is your farm operation divided by US 12? **Yes** **No**
5. a) Is US 12 the only access to your main farm operation? **Yes** **No**

   b) If no, is the other access via a road that intersects with US 12? **Yes** **No**
6. If you (or others you manage) **cross** US 12 for farm activities, what percentage of the trips are:
   - To access fields with agricultural equipment: _____**%**
   - To transport animals between grazing locations: _____**%**
7. a) During peak seasons, how often do you cross US 12 with long/heavy agricultural equipment?

   _____ times per day _____ times per week _____ times per month

   b) What are your peak equipment months? (please circle)

   January February March April May June July August September October November December
8. If your farm is located adjacent to US 12, approximately how many times per day do vehicles access your main farm?

   ____**Trucks** ____**Equipment (tractors, etc.)** ____**Other vehicles (employee cars, etc.)**
9. Where do you send your goods? _____
10. a) If you hire custom work, from where do they travel to reach your fields? (town/city) _____

    b) Type(s) of custom work: _____

Please make notations on the attached map worksheets as instructed on the bottom of each page. An example map can be seen on the back of this page. When you are finished, place this survey page and only the map worksheets you marked in the return, postage-paid envelope and mail by May 31, 2011. Thank you for your input. Your answers will help the study team identify safety and access needs along US 12. Space is provided on the back of this page for any general comments. If you have questions or would like clarification on this survey, please contact either of the project managers identified below.

Project Contacts:

Franklin Marcos
WisDOT Project Manager
WisDOT Southwest Region
2101 Wright Street
Madison, WI 53704
Tel: (608) 246-3860
franklin.marcos@dot.wi.gov

Manfred Enburg
Consultant Project Manager
TranSmart Technologies, Inc.
2802 Coho Street, Suite 102
Madison, WI 53713
Tel: (608) 268-3924
menburg@trafficonline.com

Example Map

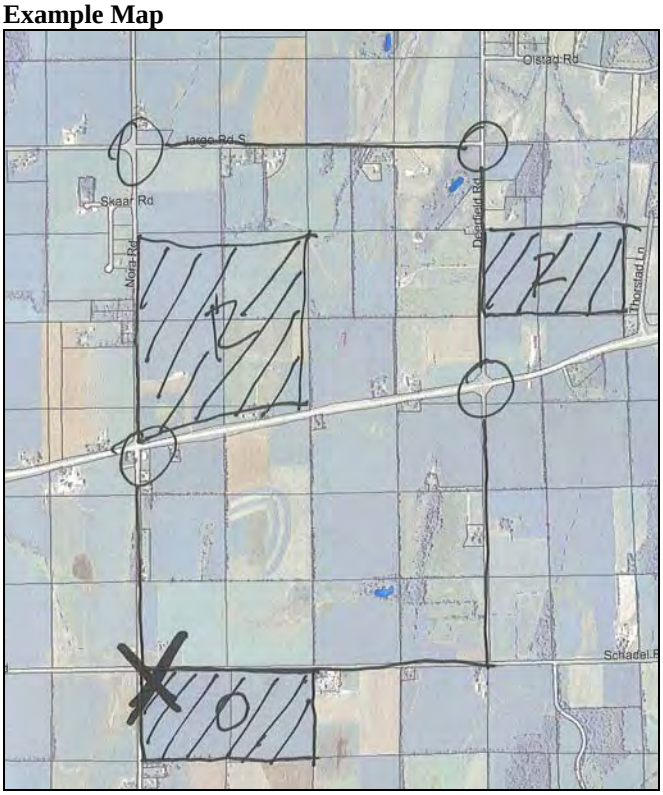

Instructions for enclosed maps

1. Place an **X** on your main farm.
2. Please identify your farm property by drawing on the map (outline, shade in, etc.) and mark the following letters on your individual parcels:
   - **O –** Property you own and farm
   - **R –** Property you lease or rent from someone else
3. Circle roadway intersections that are important to your farm operations.
4. Trace over **local roads** that are important for your farm operation, either to access fields or for other activities.

Please provide any additional general comments in the space below.

_____

_____

_____

_____

_____

_____

_____

_____

_____

_____

_____

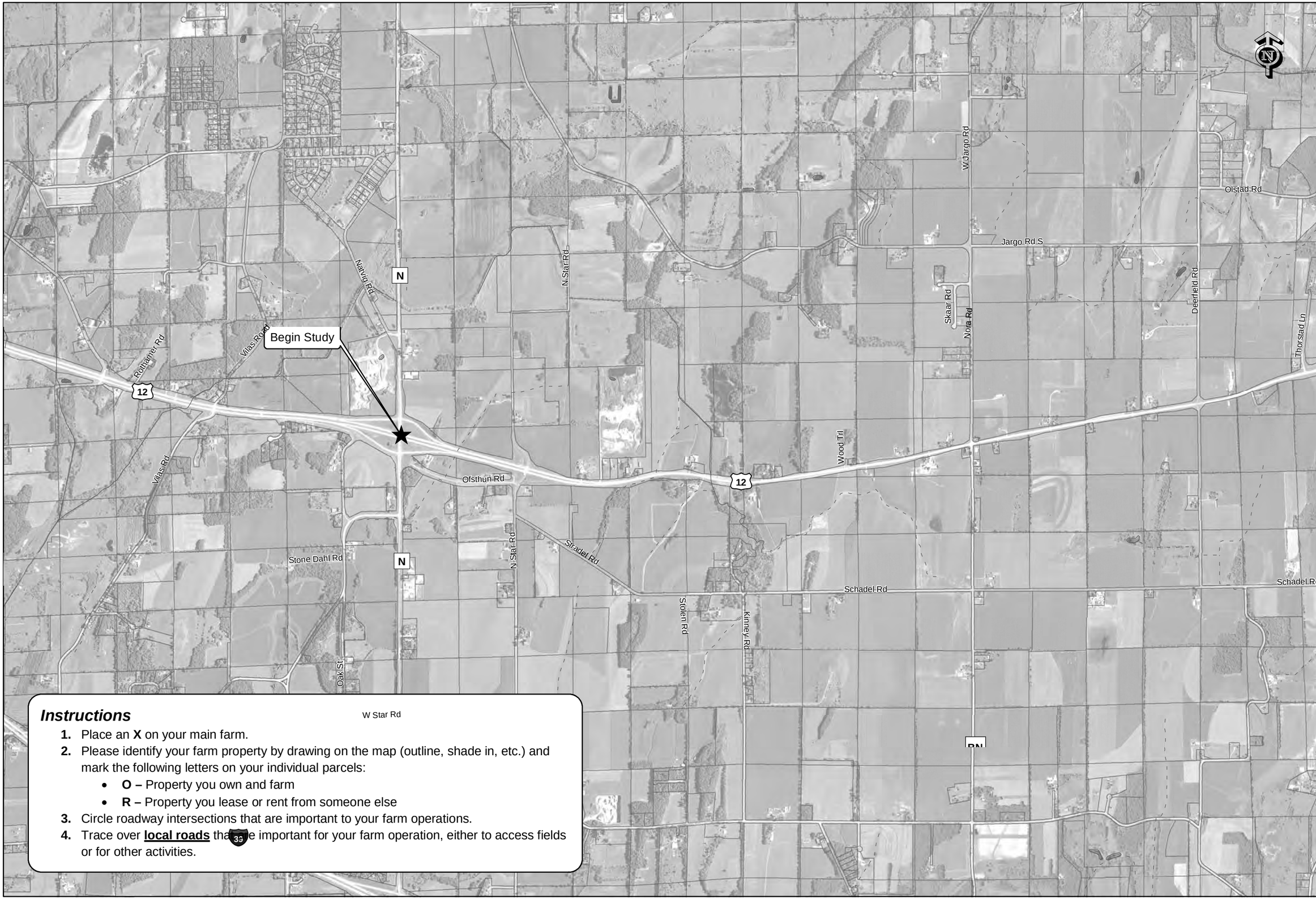

Instructions

1. Place an **X** on your main farm.
2. Please identify your farm property by drawing on the map (outline, shade in, etc.) and mark the following letters on your individual parcels:
   - **O –** Property you own and farm
   - **R –** Property you lease or rent from someone else
3. Circle roadway intersections that are important to your farm operations.
4. Trace over **local roads** that are important for your farm operation, either to access fields or for other activities.

1 of 4

Agriculture Operations Survey

US 12 Corridor Preservation Study

1 in = 2000 ft

TranSmart

Instructions

1. Place an **X** on your main farm.
2. Please identify your farm property by drawing on the map (outline, shade in, etc.) and mark the following letters on your individual parcels:
   - **O –** Property you own and farm
   - **R –** Property you lease or rent from someone else
3. Circle roadway intersections that are important to your farm operations.
4. Trace over **local roads** that are important for your farm operation, either to access fields or for other activities.

2 of 4

Agriculture Operations Survey

US 12 Corridor Preservation Study

1 in = 2000 ft

TranSmart

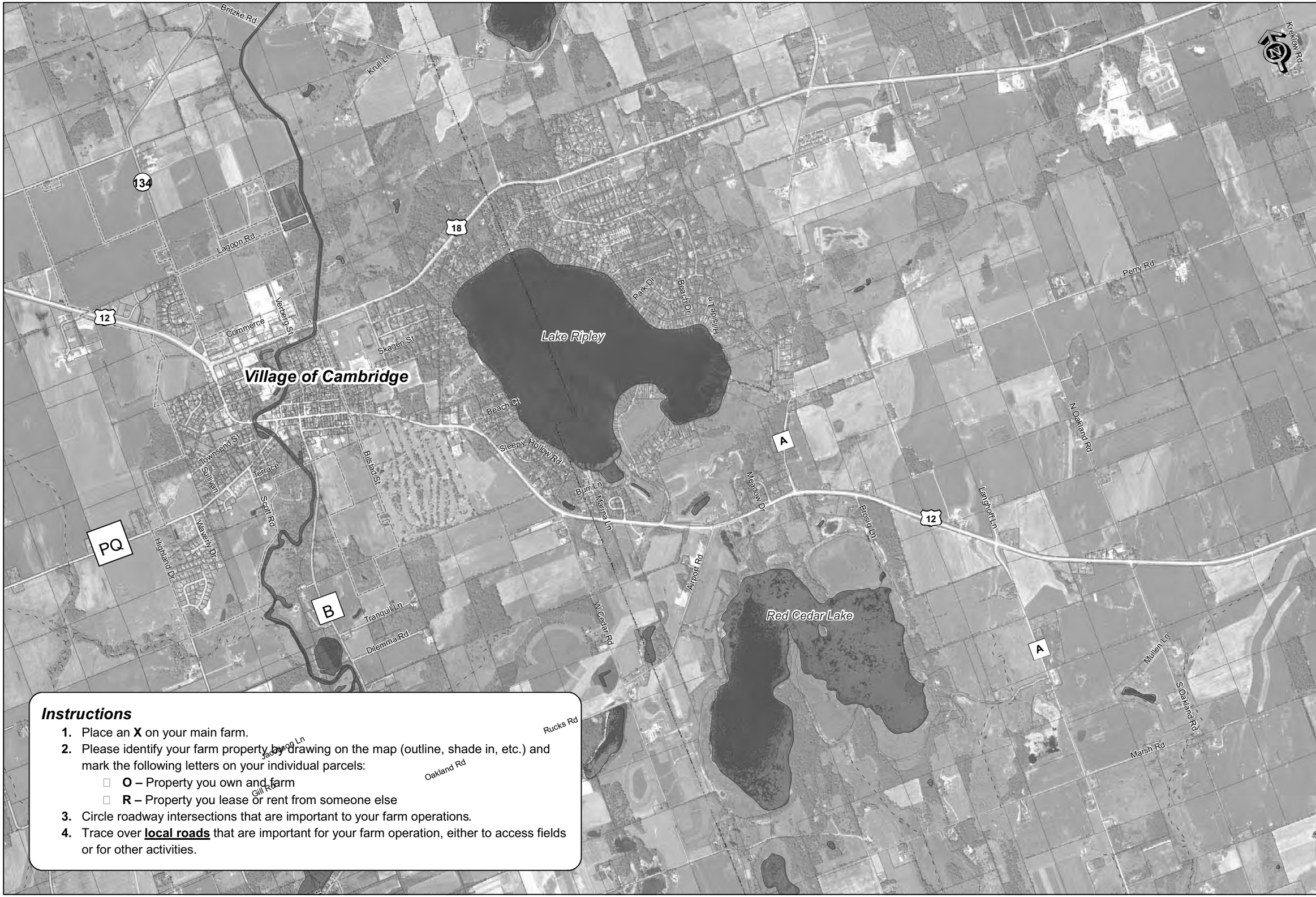

Instructions

1. Place an **X** on your main farm.
2. Please identify your farm property by drawing on the map (outline, shade in, etc.) and mark the following letters on your individual parcels:
   - **O –** Property you own and farm
   - **R –** Property you lease or rent from someone else
3. Circle roadway intersections that are important to your farm operations.
4. Trace over **local roads** that are important for your farm operation, either to access fields or for other activities.

3 of 4

Agriculture Operations Survey

US 12 Corridor Preservation Study

1 in = 2000 ft

TranSmart

4 of 4

Agriculture Operations Survey

US 12 Corridor Preservation Study

1 in = 2000 ft

TranSmart

Agriculture Survey Consolidated Questionnaire Answers

2. What activities best describe your farm?

Dairy/Cattle	4
Pork/Poultry	1
Crops/Produce	13
Other	Horse sales, sheep

3. On average approximately how many acres you **own: _____**and/or **rent/lease:_____**

Response No.	Own	Rent/lease
1	300	200
2	259	-
3	1000	1,000
5	500	1,500
6	69	-
7	-	1,100
8	1,390	1,000+
9	800	700
10	500+	2,500+
11	775	1,480
12	95	-
13	218	-
14	100	-
15	400	150

4. Is your farm operation divided by US 12? **Yes 9 No 4**

5. a) Is US 12 the only access to your main farm operation? **Yes 9 No 4**

   b) If no, is the other access via a road that intersects with US 12? **Yes 4 No 0**

6. If you (or others you manage) **cross** US 12 for farm activities, what percentage of the trips are:

- To access fields with agricultural equipment: _____**%**
- To transport animals between grazing locations: _____**%**

Response No.	Access Fields (%)	Transport animals (%)
1	20	5
2	100	100
3	75	0
5	100	100
6	100	-
7	100	-
8	100	-
9	10	0
10	100	-
11	n.a.	n.a.
12	n.a.	n.a.
13	20	0
14	100	-
15	50	-

7. a) During peak seasons, how often do you cross US 12 with long/heavy agricultural equipment?

Response No.	Times/day	Times/week	Times/month
1	15	105	-
2	20-30	-	-
3	6+	-	-
5	50	-	-
6	3	15	30
7	-	6-8	-
8	20+	-	-
9	50+	-	-
10	50-60	350	1,400
11	30	-	-
12	0	-	-
13	3	12	50
14	20	-	-
15	-	10	40

b) What are your peak equipment months? (responses for each month)

January	February	March	April	May	June	July	August	September	October	November	December
0	0	1	13	14	9	2	1	8	14	13	0

8. If your farm is located adjacent to US 12, approximately how many times per day do vehicles access your main farm?

Response No.	Trucks	Equipment	Other vehicles
1	10	-	30
2	2-8	-	-
5	20	10	15
15	4	3	2

9. Where do you send your goods? (response totals for each destination mentioned)

Gavilon/Vasby's (Cambridge)	10
Landmark (Cottage Grove)	6
United Co-op (Deerfield)	1
Dean Foods (Sun Prairie)	1
Jefferson	1
Cooperative Plus, Inc. (Whitewater)	1

10. a) If you hire custom work, from where do they travel to reach your fields?

Johnson Creek	1
London	1
Sun Prairie	1
Deerfield	3

b) Type(s) of custom work:

Spraying	5
Fertilizer spreading	3
Planting	2
Combining	1
Harvesting	1

General comments:

- People drive like they are crazy on 12 & 18!!!
- Public safety and courtesy are my concerns when I utilize Hwy 12 to transport agricultural equipment to and from locations on map. I try to travel when traffic is minimal – nights, late morning, etc.
- Turn off of Hwy 12/18 at State Farm Road is super hazardous and also onto Fadness Road. Clear View Road with grain hauling is a big concern with 80,000 pound loads in fall harvest.
- Culverts need to be placed much deeper than you have done in the past. We had no ponding issues until the roads got redone and water backs up due to your redesign of the roads. Communication with the land operator is critical – they understand the land much better than your engineers who have only studied the area for a short time. Those of us that have farmed for years and depend upon that land for a living (production agriculture) know a lot more on how the water flows.
- Entrance to Trieloff Road needs a passing lane coming from the east.

Appendix E Threatened and Endangered Species

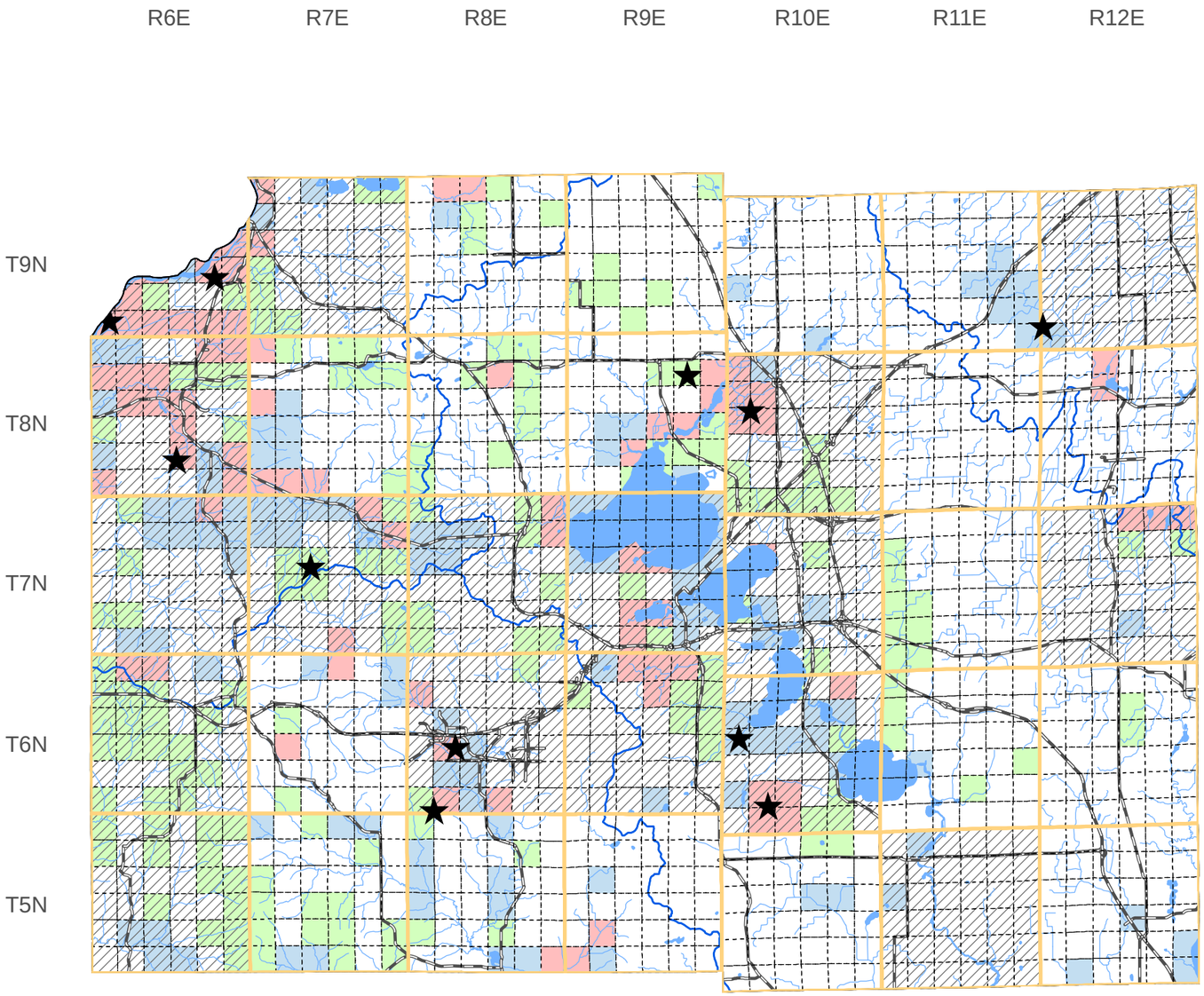

Dane County

AQUATIC OCCURRENCES

Animal

Bullhead, Plethobasus cyphyus, 1988
A Predaceous Diving Beetle, Liooporeus triangularis, 1985
Broad-winged Skipper, Poanes viator, 1991
Pirate Perch, Aphredoderus sayanus, 2007
An Owlet Moth, Macrochilo bivittata, 2001
Rock Pocketbook, Arcidens confragosus, 1997
Redfin Shiner, Lythrurus umbratilis, 1928
American Bullfrog, Lithobates catesbeianus, 2009
Northern Cricket Frog, Acris crepitans, 1983
Round Pigtoe, Pleurobema sintoxia, 1997
Banded Killifish, Fundulus diaphanus, 1975
Mulberry Wing, Poanes massasoit, 2003
Mud Darter, Etheostoma asprigene, 2009
Blanding's Turtle, Emydoidea blandingii, 2009
Great Spreadwing, Archilestes grandis, 1983
Western Sand Darter, Etheostoma clarum, 1994
Lake Sturgeon, Acipenser fulvescens, 1991
Arctic Shrew, Sorex arcticus, 1962
Blue Sucker, Cycleptus elongatus, 2008
Lake Chubsucker, Erimyzon sucetta, 1968
Ellipse, Venustaconcha ellipsiformis, 1985
Silver Chub, Macrhybopsis storeriana, 1993
Black Redhorse, Moxostoma duquesnei, 1928
Cyrano Darner, Nasiaeschna pentacantha, 1964
American Eel, Anguilla rostrata, 1979
Least Bittern, Ixobrychus exilis, 2009
Striped Shiner, Luxilus chrysocephalus, 1900
Butterfly, Ellipsaria lineolata, 1997
Buckhorn, Tritogonia verrucosa, 1997
False Map Turtle, Graptemys pseudogeographica, 1985
Paddlefish, Polyodon spathula, 1992
Bald Eagle, Haliaeetus leucocephalus, 2008
Elktoe, Alasmidonta marginata, 1988
Mussel Bed, Mussel Bed, 1988
Monkeyface, Quadrula metanevra, 1988
Pugnose Shiner, Notropis anogenus, 1900
Red-shouldered Hawk, Buteo lineatus, 2007
Higgins' Eye, Lampsilis higginsii, 2009
Silphium Borer Moth, Papaipema silphii, 2009
Shoal Chub, Macrhybopsis aestivalis, 1994
Smoky Shadowfly, Neurocordulia molesta, 1993
Osprey, Pandion haliaetus, 2005
Starhead Topminnow, Fundulus dispar, 2009
Least Darter, Etheostoma microperca, 1972
Black-crowned Night-heron, Nycticorax nycticorax, 1929
Smokey Eyed Brown, Satyrodes eurydice fumosa, 2001
Pugnose Minnow, Opsopoeodus emiliae, 1964
Greater Redhorse, Moxostoma valenciennesi, 2006
Redside Dace, Clinostomus elongatus, 1979

Plants

Sticky False-asphodel, Tofieldia glutinosa, 1858
Pale Bulrush, Scirpus pallidus, 1916
Crossleaf Milkwort, Polygala cruciata, 1858
Northern Yellow Lady's-slipper, Cypripedium parviflorum var. makasin, 2001
Small Forget-me-not, Myosotis laxa, 1936
Tufted Bulrush, Scirpus cespitosus, 2006
Swamp Agrimony, Agrimonia parviflora, 1990
Hidden-fruited Bladderwort, Utricularia geminiscapa, 1966
Drooping Sedge, Carex prasina, 1993
Showy Lady's-slipper, Cypripedium reginae, 2005
Slim-stem Small-reedgrass, Calamagrostis stricta, 1947
Adder's-tongue, Ophioglossum pusillum, 2001
Common Bog Arrow-grass, Triglochin maritima, 1891
Smooth-sheath Sedge, Carex laevivaginata, 1989
Prairie White-fringed Orchid, Platanthera leucophaea, 2008
Sycamore, Platanus occidentalis, 1946
Lesser Fringed Gentian, Gentianopsis procera, 2005
Glade Mallow, Napaea dioica, 2009
Sheathed Pondweed, Potamogeton vaginatus, 1947
Sweet-scented Indian-plantain, Cacalia suaveolens, 2001
Wild Licorice, Glycyrrhiza lepidota, 1977
Whip Nutrush, Scleria triglomerata, 2001
Cuckooflower, Cardamine pratensis, 1891
Hall's Bulrush, Scirpus hallii, 1996
Engelmann Spike-rush, Eleocharis engelmannii, 1996
Small White Lady's-slipper, Cypripedium candidum, 2006
Pink Milkwort, Polygala incarnata, 2006

Natural Communities

Alder Thicket, Alder thicket, 1969
Bog Relict, Bog relict, 1987
Southern Sedge Meadow, Southern sedge meadow, 2001
Wet-mesic Prairie, Wet-mesic prairie, 1985
Ephemeral Pond, Ephemeral pond, 1978
Floodplain Forest, Floodplain forest, 2001
Emergent Marsh, Emergent marsh, 2001
Wet Prairie, Wet prairie, 1981
Lake--Shallow, Hard, Seepage, Lake--shallow, hard, seepage, 1974
Forested Seep, Forested seep, 2001
Calcareous Fen, Calcareous fen, 2001
Northern Wet Forest, Northern wet forest, 2002
Springs and Spring Runs, Hard, Springs and spring runs, hard, 1985
Stream--Fast, Hard, Warm, Stream--fast, hard, warm, 1973
Shrub-carr, Shrub-carr, 1984
Lake--Shallow, Hard, Drainage, Lake--shallow, hard, drainage, 1985
Stream--Slow, Hard, Cold, Stream--slow, hard, cold, 1969
Stream--Slow, Hard, Warm, Stream--slow, hard, warm, 1974

TERRESTRIAL OCCURRENCES

Animal

Phyllira Tiger Moth, Grammia phyllira, 1996
Short-winged Grasshopper, Dichromorpha viridis, 1998
Prairie Vole, Microtus ochrogaster, 1997
A Leafhopper, Prairiana cinerea, 1996
Yellow-billed Cuckoo, Coccyzus americanus, 2009
Ottoe Skipper, Hesperia ottoe, 1992
Yellow-breasted Chat, Icteria virens, 1997
Upland Sandpiper, Bartramia longicauda, 2003
Juniper Hairstreak, Callophrys gryneus, 1988
Gray Ratsnake, Pantherophis spiloides, 1927
Plains Gartersnake, Thamnophis radix, 1995
Western Meadowlark, Sturnella neglecta, 2003
North American Racer, Coluber constrictor, 2007
Henslow's Sparrow, Ammodramus henslowii, 2010
Franklin's Ground Squirrel, Spermophilus franklinii, 1944
A Leafhopper, Prairiana angustens, 1996
Acadian Flycatcher, Empidonax virescens, 2006
Bell's Vireo, Vireo bellii, 2009
Bat Hibernaculum, Bat Hibernaculum, 1973
Dickcissel, Spiza americana, 2008
Loggerhead Shrike, Lanius ludovicianus, 1982
Northern Long-eared Bat, Myotis septentrionalis, 2007
Slender Glass Lizard, Ophisaurus attenuatus, 1986
Herp Hibernaculum, Herp Hibernaculum, 1998
A Leafhopper, Amplicephalus kansiensis, 1997
Prairie Leafhopper, Polyamia dilata, 1998
Gophersnake, Pituophis catenifer, 2008
Timber Rattlesnake, Crotalus horridus, 2009
Whitney's Underwing Moth, Catocala whitneyi, 1992
Regal Fritillary, Speyeria idalia, 2008
Barn Owl, Tyto alba, 1994
A Leafhopper, Laevicephalus vannus, 1999
Ornate Box Turtle, Terrapene ornata, 2007
Woodland Vole, Microtus pinetorum, 1944
Western Harvest Mouse, Reithrodontomys megalotis, 1996
Pygmy Shrew, Sorex hoyi, 1961
Abbreviated Underwing Moth, Catocala abbreviatella, 1992
Hooded Warbler, Wilsonia citrina, 2008
Peregrine Falcon, Falco peregrinus, 2009
Red-tailed Prairie Leafhopper, Aflexia rubranura, 2006
Cerulean Warbler, Dendroica cerulea, 2003

Plants

Prairie Fame-flower, Talinum rugospermum, 1993
One-flowered Broomrape, Orobanche uniflora, 1996
Prairie Bush-clover, Lespedeza leptostachya, 2008
Reflexed Trillium, Trillium recurvatum, 2000
Pale Green Orchid, Platanthera flava var. herbiola, 1998
Prairie Ragwort, Senecio plattensis, 2008
Purple-stem Cliff-brake, Pellaea atropurpurea, 1967
Yellow Giant Hyssop, Agastache nepetoides, 1999
Yellow Gentian, Gentiana alba, 2008
Richardson Sedge, Carex richardsonii, 1953
Pale-purple Coneflower, Echinacea pallida, 2002
Wild Pink, Silene regia, 2005
Pale False Foxglove, Agalinis skinneriana,
Snowy Campion, Silene nivea, 1880
Prairie Indian Plantain, Cacalia tuberosa, 2009
Roundstem Foxglove, Agalinis gattingeri, 1999
Heart-leaved Skullcap, Scutellaria ovata, 2008
Prairie Turnip, Pediomelum esculentum, 1999
Prairie Milkweed, Asclepias sullivantii, 1858
Flodman Thistle, Cirsium flodmanii, 1949
Purple Meadow-parsnip, Thaspium trifoliatum var. flavum, 1963
Short's Rock-cress, Arabis shortii, 1992
Twinleaf, Jeffersonia diphylla, 2006
Rough Rattlesnake-root, Prenanthes aspera, 2001
Autumn Coral-root, Corallorhiza odontorhiza, 1991
Purple Milkweed, Asclepias purpurascens, 2009
Prairie Parsley, Polytaenia nuttallii, 1991
Yellow Wild-indigo, Baptisia tinctoria, 1986
Hairy Wild-petunia, Ruellia humilis, 2001
Wild Hyacinth, Camassia scilloides, 2003
Woolly Milkweed, Asclepias lanuginosa, 2007
Large Roundleaf Orchid, Platanthera orbiculata, 1993
Innocence, Houstonia caerulea, 1993
American Fever-few, Parthenium integrifolium, 1984
Shadowy Goldenrod, Solidago sciaphila, 1992
Hill's Thistle, Cirsium hillii, 2002
Kitten Tails, Besseya bullii, 1998
Cluster Fescue, Festuca paradoxa, 1947
Wilcox Panic Grass, Panicum wilcoxianum, 1958
Nodding Rattlesnake-root, Prenanthes crepidinea, 2001
American Gromwell, Lithospermum latifolium, 2000
Prairie Dunewort, Botrychium campestre, 2006
Earleaf Foxglove, Tomanthera auriculata, 1860
Marbleseed, Onosmodium molle, 1995
Prairie False-dandelion, Microseris cuspidata, 2003
Broad Beech Fern, Phegopteris hexagonoptera, 1901

Natural Communities

Oak Opening, Oak opening, 1988
Southern Dry Forest, Southern dry forest, 1989
Dry Prairie, Dry prairie, 1997
Dry-mesic Prairie, Dry-mesic prairie, 2001
Southern Dry-mesic Forest, Southern dry-mesic forest, 2005
Oak Barrens, Oak barrens, 1988
Mesic Prairie, Mesic prairie, 1995
Oak Woodland, Oak woodland, 1993
Dry Cliff, Dry cliff, 1978
Cedar Glade, Cedar glade, 1978
Southern Mesic Forest, Southern mesic forest, 1987

SPECIES and/or NATURAL COMMUNITY | Aquatic | Terrestrial | Both | Township Occurrences | Watershed Boundaries | ★ State Natural Area

WISCONSIN DEPT. OF NATURAL RESOURCES

This map represents the known occurrences of rare species and natural communities that have been recorded in the Wisconsin Natural Heritage Inventory (NHI). Colored sections indicate the presence of one or more occurrences within that section. Hatched townships indicate one or more occurrences reported only at the township level. The date following the names above notes the most recent year the occurrence was recorded in the county.

Map generated using NHI data from: 09/15/2010
Copyright 2003, WDNR-Bureau of Endangered Resources
This map may not be reproduced without prior written permission.

ENDANGERED RESOURCES

Jefferson County

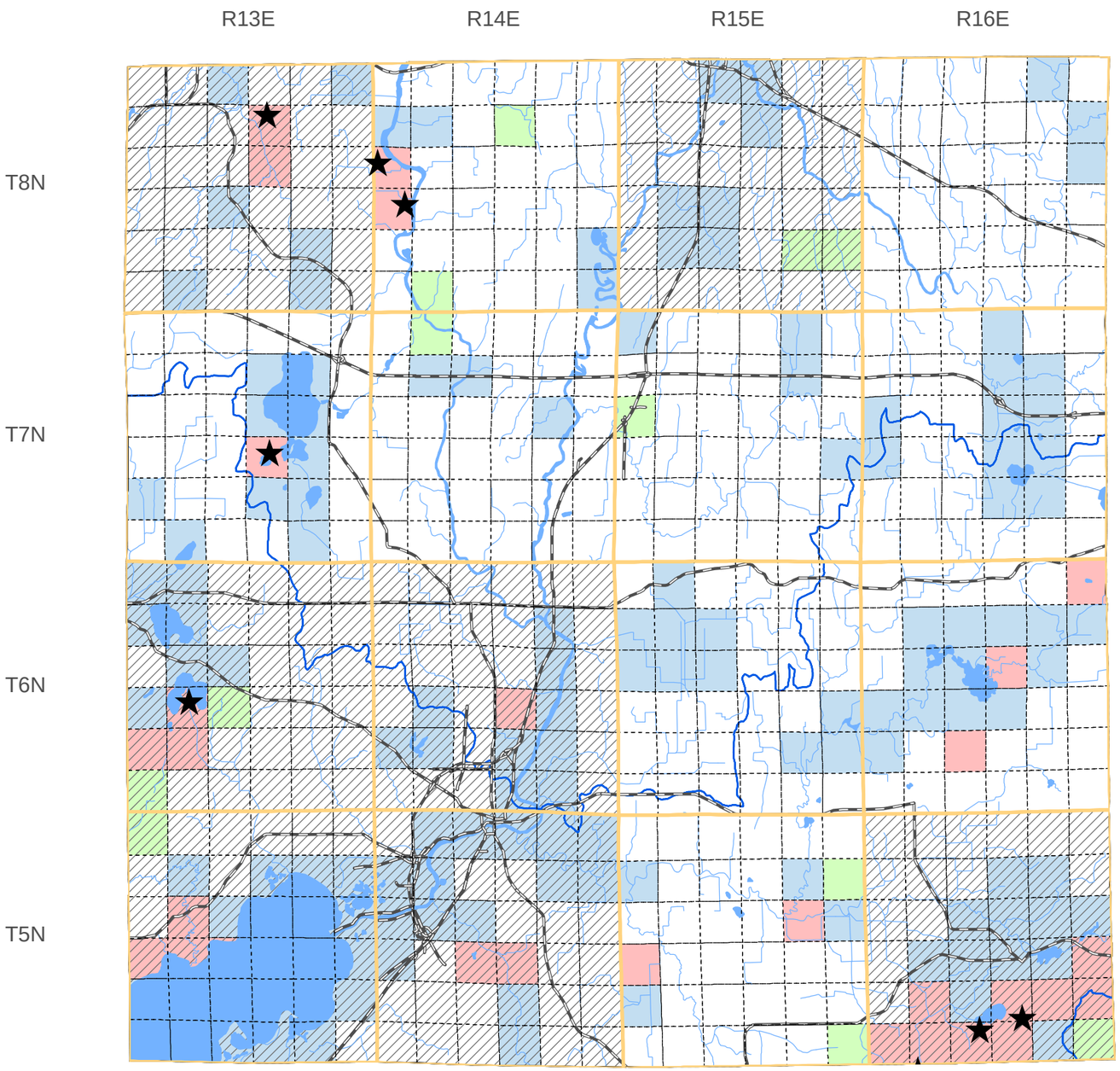

AQUATIC OCCURRENCES

Animal

Redfin Shiner, Lythrurus umbratilis, 1928
Northern Cricket Frog, Acris crepitans, 1983
American Bullfrog, Lithobates catesbeianus, 1987
Trumpeter Swan, Cygnus buccinator, 2000
Banded Killifish, Fundulus diaphanus, 1995
Blanding's Turtle, Emydoidea blandingii, 2009
Western Sand Darter, Etheostoma clarum, 1923
Slender Madtom, Noturus exilis, 2008
Ellipse, Venustaconcha ellipsiformis, 2009
Lake Chubsucker, Erimyzon sucetta, 2009
Weed Shiner, Notropis texanus, 1928
Double-striped Bluet, Enallagma basidens, 2007
Lake Sturgeon, Acipenser fulvescens, 1979
Jade Clubtail, Arigomphus submedianus, 2003
Bald Eagle, Haliaeetus leucocephalus, 2008
Black Tern, Chlidonias niger, 2009
Queensnake, Regina septemvittata, 1894
Pugnose Shiner, Notropis anogenus, 2004
Silphium Borer Moth, Papaipema silphii, 2005
River Redhorse, Moxostoma carinatum, 2006
Liatris Borer Moth, Papaipema beeriana, 2002
Least Darter, Etheostoma microperca, 2005
Black-crowned Night-heron, Nycticorax nycticorax, 1977
Pugnose Minnow, Opsopoeodus emiliae, 1976
Prothonotary Warbler, Protonotaria citrea, 2005
Western Ribbonsnake, Thamnophis proximus, 1963
Greater Redhorse, Moxostoma valenciennesi, 2006

Plants

Sticky False-asphodel, Tofieldia glutinosa, 1991
Crossleaf Milkwort, Polygala cruciata, 1885
Northern Yellow Lady's-slipper, Cypripedium parviflorum var. makasin, 1996
Crawe Sedge, Carex crawei, 2005
Flat-stemmed Spike-rush, Eleocharis compressa, 2009
Few-flower Spikerush, Eleocharis quinqueflora, 2007
Swamp-pink, Arethusa bulbosa, 1861
Prairie Straw Sedge, Carex suberecta, 1950
Showy Lady's-slipper, Cypripedium reginae, 1984
Downy Willow-herb, Epilobium strictum, 2006
Prairie White-fringed Orchid, Platanthera leucophaea, 2007
Common Bog Arrow-grass, Triglochin maritima, ?
Lesser Fringed Gentian, Gentianopsis procera, 1976
Slenderleaf Sundew, Drosera linearis, 1860
Cuckooflower, Cardamine pratensis, 2004
Small White Lady's-slipper, Cypripedium candidum, 2009
Ohio Goldenrod, Solidago ohioensis, 2000
Yellow Water Lily, Nuphar advena, 1943
Marsh Blazing Star, Liatris spicata, 1981

Natural Communities

Open Bog, Open bog, 1984
Wet-mesic Prairie, Wet-mesic prairie, 2009
Emergent Marsh, Emergent marsh, 1986
Southern Sedge Meadow, Southern sedge meadow, 2005
Wet Prairie, Wet prairie, 1984
Floodplain Forest, Floodplain forest, 1986
Lake--Shallow, Hard, Seepage, Lake--shallow, hard, seepage, 1998
Calcareous Fen, Calcareous fen, 1984
Northern Wet Forest, Northern wet forest, 1984
Springs and Spring Runs, Hard, Springs and spring runs, hard, 1984
Southern Tamarack Swamp (Rich), Southern tamarack swamp (rich), 1999
Shrub-carr, Shrub-carr, 1984
Lake--Hard Bog, Lake--hard bog, 1984
Lake--Shallow, Hard, Drainage, Lake--shallow, hard, drainage, 1984
Stream--Slow, Hard, Warm, Stream--slow, hard, warm, 1984

TERRESTRIAL OCCURRENCES

Animal

Yellow-billed Cuckoo, Coccyzus americanus, 2005
Upland Sandpiper, Bartramia longicauda, 1986
Acadian Flycatcher, Empidonax virescens, 2009
Bird Rookery, Bird Rookery, 1988
Barn Owl, Tyto alba, 1981
Cerulean Warbler, Dendroica cerulea, 2010
Red-tailed Prairie Leafhopper, Aflexia rubranura, 2003
Hooded Warbler, Wilsonia citrina, 2009
A Leafhopper, Flexamia prairiana, 1996

Plants

Pale Green Orchid, Platanthera flava var. herbiola, 1865
Prairie Sagebrush, Artemisia frigida, 1886
Reflexed Trillium, Trillium recurvatum, 2002
Yellow Giant Hyssop, Agastache nepetoides,
Yellow Gentian, Gentiana alba, 2009
Yellow Evening Primrose, Calylophus serrulatus, 1942
Richardson Sedge, Carex richardsonii, 2001
Prairie Indian Plantain, Cacalia tuberosa, 2009
White Camas, Zigadenus elegans var. glaucus, 2009
Prairie Milkweed, Asclepias sullivantii, 2000
Purple Milkweed, Asclepias purpurascens, 2009
Autumn Coral-root, Corallorhiza odontorhiza, 2004
Kitten Tails, Besseya bullii, 2009
American Gromwell, Lithospermum latifolium, 2001

Natural Communities

Oak Opening, Oak opening, 2009
Southern Dry Forest, Southern dry forest, 1984
Dry Prairie, Dry prairie, 2005
Southern Dry-mesic Forest, Southern dry-mesic forest, 2006
Southern Mesic Forest, Southern mesic forest, 2004

SPECIES and/or NATURAL COMMUNITY | Aquatic | Terrestrial | Both | Township Occurrences | Watershed Boundaries | ★ State Natural Area

WISCONSIN DEPT. OF NATURAL RESOURCES

This map represents the known occurrences of rare species and natural communities that have been recorded in the Wisconsin Natural Heritage Inventory (NHI). Colored sections indicate the presence of one or more occurrences within that section. Hatched townships indicate one or more occurrences reported only at the township level. The date following the names above notes the most recent year the occurrence was recorded in the county.

Map generated using NHI data from: 09/15/2010

Copyright 2003, WDNR-Bureau of Endangered Resources
This map may not be reproduced without prior written permission.

ENDANGERED RESOURCES

County Distribution of Wisconsin's Federally Threatened, Endangered, Proposed, and Candidate Species

For more information about threatened and endangered species in Wisconsin, please contact:
U.S. Fish & Wildlife Service, 2661 Scott Tower Drive, New Franken, WI 54229 Phone: (920) 866-1717
January 2011

State	County	Species	Status	Habitat
Wisconsin	Adams	Gray wolf (*Canis lupus*)	Endangered	Northern forested areas
Wisconsin	Adams	Kirtland's warbler (*Dendroica kirtlandii*)	Endangered	Young jack pine stands (5 to 25 years old)
Wisconsin	Adams	Whooping crane (*Grus americanus*)	Non-essential Experimental Population	Open wetlands and lakeshores
Wisconsin	Adams	Karner blue butterfly *(Lycaeides melissa samuelis*)	Endangered	Prairie, oak savanna, and jack pine areas with wild lupine
Wisconsin	Ashland	Canada lynx *(Lynx canadensis*)	Threatened	While no resident populations are known from Wisconsin, the species occasionally occurs in northern forested areas, and counties listed are those with the highest likelihood of occurrence.
Wisconsin	Ashland	Gray wolf (*Canis lupus*)	Endangered	Northern forested areas
Wisconsin	Ashland	Piping plover *(Charadrius melodus*)	Endangered	Sandy beaches; bare alluvial and dredge spoil islands
Wisconsin	Ashland	Piping plover *(Charadrius melodus)*	Critical Habitat Designated	
Wisconsin	Barron	Gray wolf (*Canis lupus*)	Endangered	Northern forested areas
Wisconsin	Barron	Karner blue butterfly *(Lycaeides melissa samuelis*)	Endangered	Prairie, oak savanna, and jack pine areas with wild lupine
Wisconsin	Bayfield	Canada lynx *(Lynx canadensis*)	Threatened	While no resident populations are known from Wisconsin, the species occasionally occurs in northern forested areas, and counties listed are those with the highest likelihood of occurrence.
Wisconsin	Bayfield	Gray wolf (*Canis lupus*)	Endangered	Northern forested areas
Wisconsin	Bayfield	Fassett's locoweed (*Oxytropis campestris* var. *chartacea*)	Threatened	open sandy lakeshore
Wisconsin	Brown	Dwarf lake iris *(Iris lacustris*)	Threatened	Partially shaded sandy-gravelly soils on lakeshores
Wisconsin	Buffalo	Eastern massasauga *(Sistrurus catenatus catenatus)*	Candidate	Open to forested wetlands and adjacent uplands

State	County	Species	Status	Habitat
Wisconsin	Buffalo	Higgins' eye pearly mussel *(Lampsilis Higginsi)*	Endangered	Mississippi River
Wisconsin	Burnett	Canada lynx *(Lynx canadensis)*	Threatened	While no resident populations are known from Wisconsin, the species occasionally occurs in northern forested areas, and counties listed are those with the highest likelihood of occurrence.
Wisconsin	Burnett	Gray wolf (*Canis lupus*)	Endangered	Northern forested areas
Wisconsin	Burnett	Whooping crane (*Grus americanus*)	Non-essential Experimental Population	Open wetlands and lakeshores
Wisconsin	Burnett	Spectaclecase (*Cumberlandia monodonta*)	Proposed as Endangered	St. Croix River
Wisconsin	Burnett	Karner blue butterfly *(Lycaeides melissa samuelis)*	Endangered	Prairie, oak savanna, and jack pine areas with wild lupine
Wisconsin	Calumet	Whooping crane (*Grus americanus*)	Non-essential Experimental Population	Open wetlands and lakeshores
Wisconsin	Chippewa	Gray wolf (*Canis lupus*)	Endangered	Northern forested areas
Wisconsin	Chippewa	Spectaclecase (*Cumberlandia monodonta*)	Proposed as Endangered	St. Croix River
Wisconsin	Chippewa	Karner blue butterfly *(Lycaeides melissa samuelis)*	Endangered	Prairie, oak savanna, and jack pine areas with wild lupine
Wisconsin	Clark	Gray wolf (*Canis lupus*)	Endangered	Northern forested areas
Wisconsin	Clark	Whooping crane (*Grus americanus*)	Non-essential Experimental Population	Open wetlands and lakeshores
Wisconsin	Clark	Karner blue butterfly *(Lycaeides melissa samuelis)*	Endangered	Prairie, oak savanna, and jack pine areas with wild lupine
Wisconsin	Columbia	Whooping crane (*Grus americanus*)	Non-essential Experimental Population	Open wetlands and lakeshores
Wisconsin	Columbia	Higgins eye pearly mussel (*Lampsilis higginsii*)	Endangered	Wisconsin River
Wisconsin	Columbia	Sheepnose (*Plethobasus cyphyus*)	Proposed as Endangered	Wisconsin River

State	County	Species	Status	Habitat
Wisconsin	Columbia	Mead's milkweed (*Asclepias meadii*)	Threatened	Upland tallgrass prairie or glade/barren habitat **Note:** all the Mead's milkweed sites in Wisconsin are reintroduction attempts and occur on protected conservation lands.
Wisconsin	Columbia	Prairie bush clover (*Lespedeza leptostachya*)	Threatened	Dry to mesic prairies with gravelly soil
Wisconsin	Crawford	Whooping crane (*Grus americanus*)	Non-essential Experimental Population	Open wetlands and lakeshores
Wisconsin	Crawford	Eastern massasauga *(Sistrurus catenatus catenatus)*	Candidate	Open to forested wetlands and adjacent uplands
Wisconsin	Crawford	Higgins' eye pearly mussel *(Lampsilis Higginsi)*	Endangered	Mississippi River
Wisconsin	Crawford	Sheepnose (*Plethobasus cyphyus*)	Proposed as Endangered	Mississippi River
Wisconsin	Dane	Whooping crane (*Grus americanus*)	Non-essential Experimental Population	Open wetlands and lakeshores
Wisconsin	Dane	Higgins' eye pearly mussel *(Lampsilis Higginsi)*	Endangered	Lower Wisconsin River
Wisconsin	Dane	Sheepnose (*Plethobasus cyphyus*)	Proposed as Endangered	
Wisconsin	Dane	Eastern prairie fringed orchid *(Platanthera leucophaea*)	Threatened	Wet grasslands
Wisconsin	Dane	Mead's milkweed (*Asclepias meadii*)	Threatened	Upland tallgrass prairie or glade/barren habitat **Note:** all the Mead's milkweed sites in Wisconsin are reintroduction attempts and occur on protected conservation lands.
Wisconsin	Dane	Prairie bush-clover *(Lespedeza leptostachya*)	Threatened	Dry to mesic prairies with gravelly soil
Wisconsin	Dodge	Whooping crane (*Grus americanus*)	Non-essential Experimental Population	Open wetlands and lakeshores
Wisconsin	Door	Hine's emerald dragonfly *(Somatochlora hineana)*	Endangered	Calcareous streams & associated wetlands overlying dolomite bedrock
Wisconsin	Door	Pitcher's thistle *(Cirsium pitcheri*)	Threatened	Stabilized dunes, and blowout areas

State	County	Species	Status	Habitat
Wisconsin	Door	Dwarf lake iris *(Iris lacustris)*	Threatened	Partially shaded sandy-gravelly soils on lakeshores
Wisconsin	Douglas	Canada lynx *(Lynx canadensis)*	Threatened	While no resident populations are known from Wisconsin, the species occasionally occurs in northern forested areas, and counties listed are those with the highest likelihood of occurrence.
Wisconsin	Douglas	Gray wolf (*Canis lupus*)	Endangered	Northern forested areas
Wisconsin	Douglas	Kirtland's warbler *(Dendroica kirtlandii)*	Endangered	Potential breeding in jack pine (5 to 25 years old)
Wisconsin	Douglas	Piping plover *(Charadrius melodus)*	Endangered	Sandy beaches; bare alluvial and dredge spoil islands
Wisconsin	Douglas	Piping plover *(Charadrius melodus)*	Critical Habitat Designated	
Wisconsin	Douglas	Fassett's locoweed *(Oxytropis campestris var. chartacea)*	Threatened	Open sandy lakeshores
Wisconsin	Dunn	Gray wolf (*Canis lupus*)	Endangered	Northern forested areas
Wisconsin	Dunn	Karner blue butterfly *(Lycaeides melissa samuelis)*	Endangered	Prairie, oak savanna, and jack pine areas with wild lupine
Wisconsin	Dunn	Sheepnose (*Plethobasus cyphyus*)	Proposed as Endangered	Chippewa River
Wisconsin	Eau Claire	Gray wolf (*Canis lupus*)	Endangered	Northern forested areas
Wisconsin	Eau Claire	Karner blue butterfly *Lycaeides melissa samuelis*)	Endangered	Prairie, oak savanna, and jack pine areas with wild lupine
Wisconsin	Eau Claire	Sheepnose (*Plethobasus cyphyus*)	Proposed as Endangered	Chippewa River
Wisconsin	Florence	Canada lynx *(Lynx canadensis)*	Threatened	While no resident populations are known from Wisconsin, the species occasionally occurs in northern forested areas, and counties listed are those with the highest likelihood of occurrence.
Wisconsin	Florence	Gray wolf (*Canis lupus*)	Endangered	Northern forested areas
Wisconsin	Fond du Lac	Whooping crane (*Grus americanus*)	Non-essential Experimental Population	Open wetlands and lakeshores

State	County	Species	Status	Habitat
Wisconsin	Forest	Canada lynx *(Lynx canadensis)*	Threatened	While no resident populations are known from Wisconsin, the species occasionally occurs in northern forested areas, and counties listed are those with the highest likelihood of occurrence.
Wisconsin	Forest	Gray wolf (*Canis lupus*)	Endangered	Northern forested areas
Wisconsin	Grant	Whooping crane (*Grus americanus*)	Non-essential Experimental Population	Open wetlands and lakeshores
Wisconsin	Grant	Higgins' eye pearly mussel *(Lampsilis Higginsi)*	Endangered	Lower Wisconsin and Mississippi Rivers
Wisconsin	Grant	Sheepnose (*Plethobasus cyphyus*)	Proposed as Endangered	
Wisconsin	Grant	Spectaclecase (*Cumberlandia monodonta*)	Proposed as Endangered	St. Croix River
Wisconsin	Grant	Hine's emerald dragonfly *(Somatochlora hineana)*	Endangered	Calcareous streams & associated wetlands overlying dolomite bedrock
Wisconsin	Grant	Mead's milkweed (*Asclepias meadii*)	Threatened	Upland tallgrass prairie or glade/barren habitat **Note:** all the Mead's milkweed sites in Wisconsin are reintroduction attempts and occur on protected conservation lands.
Wisconsin	Grant	Northern monkshood *(Aconitum noveboracense)*	Threatened	North facing slopes
Wisconsin	Grant	Prairie bush-clover *(Lespedeza leptostachya)*	Threatened	Dry to mesic prairies, with gravelly soil
Wisconsin	Green	Whooping crane (*Grus americanus*)	Non-essential Experimental Population	Open wetlands and lakeshores
Wisconsin	Green	Mead's milkweed (*Asclepias meadii*)	Threatened	Upland tallgrass prairie or glade/barren habitat **Note:** all the Mead's milkweed sites in Wisconsin are reintroduction attempts and occur on protected conservation lands.
Wisconsin	Green	Prairie bush-clover *(Lespedeza leptostachya)*	Threatened	Dry to mesic prairies, with gravelly soil
Wisconsin	Green Lake	Whooping crane (*Grus americanus*)	Non-essential Experimental Population	Open wetlands and lakeshores
Wisconsin	Green Lake	Karner blue butterfly *Lycaeides melissa samuelis*)	Endangered	Prairie, oak savanna, and jack pine areas with wild lupine

State	County	Species	Status	Habitat
Wisconsin	Green Lake	Eastern prairie fringed orchid (*Platanthera leucophaea*)	Threatened	
Wisconsin	Iowa	Whooping crane (*Grus americanus*)	Non-essential Experimental Population	Open wetlands and lakeshores
Wisconsin	Iowa	Higgins' eye pearly mussel *(Lampsilis Higginsi)*	Endangered	Lower Wisconsin Rivers
Wisconsin	Iowa	Sheepnose (*Plethobasus cyphyus*)	Proposed as Endangered	Wisconsin River
Wisconsin	Iowa	Hine's emerald dragonfly *(Somatochlora hineana)*	Endangered	Calcareous streams & associated wetlands overlying dolomite bedrock
Wisconsin	Iowa	Mead's milkweed (*Asclepias meadii*)	Threatened	Upland tallgrass prairie or glade/barren habitat **Note:** all the Mead's milkweed sites in Wisconsin are reintroduction attempts and occur on protected conservation lands.
Wisconsin	Iowa	Prairie bush-clover *(Lespedeza leptostachya*)	Threatened	Dry to mesic prairies, with gravelly soil
Wisconsin	Iron	Canada lynx *(Lynx canadensis*)	Threatened	While no resident populations are known from Wisconsin, the species occasionally occurs in northern forested areas, and counties listed are those with the highest likelihood of occurrence.
Wisconsin	Iron	Gray wolf (*Canis lupus*)	Endangered	Northern forested areas
Wisconsin	Jackson	Gray wolf (*Canis lupus*)	Endangered	Northern forested areas
Wisconsin	Jackson	Kirtland's warbler *(Dendroica kirtlandii)*	Endangered	Potential breeding in jack pine (5 to 25 years old)
Wisconsin	Jackson	Whooping crane (*Grus americanus*)	Non-essential Experimental Population	Open wetlands and lakeshores
Wisconsin	Jackson	Eastern massasauga *(Sistrurus catenatus catenatus)*	Candidate	Open to forested wetlands and adjacent uplands
Wisconsin	Jackson	Karner blue butterfly *(Lycaeides melissa samuelis*)	Endangered	Prairie, oak savanna, and jack pine areas with wild lupine
Wisconsin	Jefferson	Eastern prairie fringed orchid *(Platanthera leucophaea*)	Threatened	Wet grasslands

State	County	Species	Status	Habitat
Wisconsin	Jefferson	Whooping crane (*Grus americanus*)	Non-essential Experimental Population	Wetlands and lakeshores
Wisconsin	Juneau	Gray wolf (*Canis lupus*)	Endangered	Northern forested areas
Wisconsin	Juneau	Whooping crane (*Grus americanus*)	Non-essential Experimental Population	Open wetlands and lakeshores
Wisconsin	Juneau	Eastern massasauga *(Sistrurus catenatus catenatus)*	Candidate	Open to forested wetlands and adjacent uplands
Wisconsin	Juneau	Karner blue butterfly *(Lycaeides melissa samuelis*)	Endangered	Prairie, oak savanna, and jack pine areas with wild lupine
Wisconsin	Kenosha	Whooping crane (*Grus americanus*)	Non-essential Experimental Population	Wetlands and lakeshores
Wisconsin	Kenosha	Eastern prairie fringed orchid *(Platanthera leucophaea*)	Threatened	Wet grasslands
Wisconsin	Kewaunee	Hine's emerald dragonfly *(Somatochlora hineana)*	Endangered	Calcareous streams & associated wetlands overlying dolomite bedrock
Wisconsin	La Crosse	Whooping crane (*Grus americanus*)	Non-essential Experimental Population	Wetlands and lakeshores
Wisconsin	La Crosse	Eastern massasauga *(Sistrurus catenatus catenatus)*	Candidate	Open to forested wetlands and adjacent uplands
Wisconsin	La Crosse	Higgins' eye pearly mussel *(Lampsilis Higginsi)*	Endangered	Mississippi Rivers
Wisconsin	Lafayette	Whooping crane (*Grus americanus*)	Non-essential Experimental Population	Wetlands and lakeshores
Wisconsin	Lafayette	Prairie bush-clover (*Lespedeza leptostachya*)	Threatened	Dry mesic prairies with gravelly soil
Wisconsin	Langlade	Gray wolf (*Canis lupus*)	Endangered	Northern forested areas
Wisconsin	Lincoln	Gray wolf (*Canis lupus*)	Endangered	Northern forested areas
Wisconsin	Manitowoc	Pitcher's thistle *(Cirsium pitcheri*)	Threatened	Stabilized dunes, and blowout areas

State	County	Species	Status	Habitat
Wisconsin	Manitowoc	Piping plover *(Charadrius melodus)*	Critical Habitat Designated	
Wisconsin	Marathon	Gray wolf (*Canis lupus*)	Endangered	Northern forested areas
Wisconsin	Marathon	Whooping crane (*Grus americanus*)	Non-essential Experimental Population	Open wetlands and lakeshores
Wisconsin	Marinette	Canada lynx *(Lynx canadensis*)	Threatened	While no resident populations are known from Wisconsin, the species occasionally occurs in northern forested areas, and counties listed are those with the highest likelihood of occurrence.
Wisconsin	Marinette	Gray wolf (*Canis lupus*)	Endangered	Northern forested areas
Wisconsin	Marinette	Kirtland's warbler *(Dendroica kirtlandii)*	Endangered	Potential breeding in jack pine (5 to 25 years old)
Wisconsin	Marinette	Piping plover *(Charadrius melodus)*	Critical Habitat Designated	
Wisconsin	Marquette	Gray wolf (*Canis lupus*)	Endangered	Northern forested areas
Wisconsin	Marquette	Whooping crane (*Grus americanus*)	Non-essential Experimental Population	Open wetlands and lakeshores
Wisconsin	Marquette	Karner blue butterfly *(Lycaeides melissa samuelis*)	Endangered	Prairie, oak savanna, and jack pine areas with wild lupine
Wisconsin	Menominee	Gray wolf (*Canis lupus*)	Endangered	Northern forested areas
Wisconsin	Menominee	Karner blue butterfly *(Lycaeides melissa samuelis*)	Endangered	Prairie, oak savanna, and jack pine areas with wild lupine
Wisconsin	Monroe	Gray wolf (*Canis lupus*)	Endangered	Northern forested areas
Wisconsin	Monroe	Whooping crane (*Grus americanus*)	Non-essential Experimental Population	Open wetlands and lakeshores
Wisconsin	Monroe	Eastern massasauga *(Sistrurus catenatus catenatus)*	Candidate	Open to forested wetlands and adjacent uplands
Wisconsin	Monroe	Karner blue butterfly *(Lycaeides melissa samuelis*)	Endangered	Prairie, oak savanna, and jack pine areas with wild lupine
Wisconsin	Monroe	Northern monkshood *(Aconitum noveboracense*)	Threatened	North facing slopes
Wisconsin	Oconto	Gray wolf (*Canis lupus*)	Endangered	Northern forested areas

State	County	Species	Status	Habitat
Wisconsin	Oconto	Whooping crane (*Grus americanus*)	Non-essential Experimental Population	Open wetlands and lakeshores
Wisconsin	Oconto	Karner blue butterfly *(Lycaeides melissa samuelis*)	Endangered	Prairie, oak savanna, and jack pine areas with wild lupine
Wisconsin	Oneida	Canada lynx *(Lynx canadensis*)	Threatened	While no resident populations are known from Wisconsin, the species occasionally occurs in northern forested areas, and counties listed are those with the highest likelihood of occurrence.
Wisconsin	Oneida	Gray wolf (*Canis lupus*)	Endangered	Northern forested areas
Wisconsin	Outagamie	Snuffbox (*Epioblasma triquetra*)	Proposed as Endangered	Small to medium-sized creeks and some larger rivers, in areas with a swift current
Wisconsin	Ozaukee	(Epioblasma triquetra)	Endangered	Calcareous streams & associated wetlands overlying dolomite bedrock
Wisconsin	Ozaukee	Eastern prairie fringed orchid *(Platanthera leucophaea*)	Threatened	Wet grasslands
Wisconsin	Pepin	Whooping crane (*Grus americanus*)	Non-essential Experimental Population	Open wetlands and lakeshores
Wisconsin	Pepin	Eastern massasauga *(Sistrurus catenatus catenatus)*	Candidate	Open to forested wetlands and adjacent uplands
Wisconsin	Pepin	Prairie bush-clover (*Lespedeza leptostachya*)	Threatened	Dry mesic prairies with gravelly soils
Wisconsin	Pierce	Higgins' eye pearly mussel *(Lampsilis Higginsi)*	Endangered	Mississippi and St. Croix Rivers
Wisconsin	Pierce	Spectaclecase (*Cumberlandia monodonta*)	Proposed as Endangered	St. Croix River
Wisconsin	Pierce	Prairie bush-clover *(Lespedeza leptostachya*)	Threatened	Dry to mesic prairies with gravelly soil
Wisconsin	Polk	Gray wolf (*Canis lupus*)	Endangered	Northern forested areas
Wisconsin	Polk	Whooping crane (*Grus americanus*)	Non-essential Experimental Population	Open wetlands and lakeshores
Wisconsin	Polk	Higgins' eye pearly mussel *(Lampsilis Higginsi)*	Endangered	St. Croix Rivers

State	County	Species	Status	Habitat
Wisconsin	Polk	Snuffbox (*Epioblasma triquetra*)	Proposed as Endangered	Small to medium-sized creeks and some larger rivers, in areas with a swift current
Wisconsin	Polk	Spectaclecase (*Cumberlandia monodonta*)	Proposed as Endangered	St. Croix River
Wisconsin	Polk	Winged mapleleaf mussel *(Quadrula fragosa)*	Endangered	St. Croix Rivers
Wisconsin	Portage	Gray wolf (*Canis lupus*)	Endangered	Northern forested areas
Wisconsin	Portage	Karner blue butterfly *(Lycaeides melissa samuelis*)	Endangered	Prairie, oak savanna, and jack pine areas with wild lupine
Wisconsin	Portage	Fassett's locoweed *(Oxytropis campestris var. chartacea*)	Threatened	Open sandy lakeshores
Wisconsin	Price	Canada lynx *(Lynx canadensis*)	Threatened	While no resident populations are known from Wisconsin, the species occasionally occurs in northern forested areas, and counties listed are those with the highest likelihood of occurrence.
Wisconsin	Price	Gray wolf (*Canis lupus*)	Endangered	Northern forested areas
Wisconsin	Richland	Whooping crane (*Grus americanus*)	Non-essential Experimental Population	Open wetlands and lakeshores
Wisconsin	Richland	Higgins' eye pearly mussel *(Lampsilis Higginsi)*	Endangered	Lower Wisconsin River
Wisconsin	Richland	Sheepnose (*Plethobasus cyphyus*)	Proposed as Endangered	Richland River
Wisconsin	Richland	Hine's emerald dragonfly *(Somatochlora hineana)*	Endangered	Calcareous streams & associated wetlands overlying dolomite bedrock
Wisconsin	Richland	Northern monkshood *(Aconitum noveboracense*)	Threatened	North facing slopes
Wisconsin	Rock	Whooping crane (*Grus americanus*)	Non-essential Experimental Population	Open wetlands and lakeshores
Wisconsin	Rock	Eastern massasauga *(Sistrurus catenatus catenatus)*	Candidate	Open to forested wetlands and adjacent uplands
Wisconsin	Rock	Eastern prairie fringed orchid *(Platanthera leucophaea*)	Threatened	Wet grasslands

State	County	Species	Status	Habitat
Wisconsin	Rock	Prairie bush-clover *(Lespedeza leptostachya)*	Threatened	Dry to mesic prairies with gravelly soil
Wisconsin	Rusk	Gray wolf (*Canis lupus*)	Endangered	Northern forested areas
Wisconsin	Rusk	Sheepnose (*Plethobasus cyphyus*)	Proposed as Endangered	Chippewa River
Wisconsin	St. Croix	Higgins' eye pearly mussel *(Lampsilis Higginsi)*	Endangered	St. Croix River
Wisconsin	St. Croix	Winged mapleleaf (*Quadrula fragosa*)	Endangered	St. Croix River
Wisconsin	St. Croix	Spectaclecase (*Cumberlandia monodonta*)	Proposed as Endangered	St. Croix River
Wisconsin	St. Croix	Prairie bush-clover (*Lespedeza leptostachya*)	Threatened	Dry mesic prairies with gravelly soil
Wisconsin	Sauk	Whooping crane (*Grus americanus*)	Non-essential Experimental Population	Open wetlands and lakeshores
Wisconsin	Sauk	Higgins' eye pearly mussel *(Lampsilis Higginsi)*	Endangered	Wisconsin River
Wisconsin	Sauk	Sheepnose (*Plethobasus cyphyus*)	Proposed as Endangered	Wisconsin River
Wisconsin	Sauk	Northern monkshood *(Aconitum noveboracense)*	Threatened	North facing slopes
Wisconsin	Sauk	Prairie bush-clover *(Lespedeza leptostachya)*	Threatened	Dry to mesic prairies with gravelly soil
Wisconsin	Sawyer	Canada lynx *(Lynx canadensis)*	Threatened	While no resident populations are known from Wisconsin, the species occasionally occurs in northern forested areas, and counties listed are those with the highest likelihood of occurrence.
Wisconsin	Sawyer	Gray wolf (*Canis lupus*)	Endangered	Northern forested areas
Wisconsin	Shawano	Gray wolf (*Canis lupus*)	Endangered	Northern forested areas
Wisconsin	Shawano	Whooping crane (*Grus americanus*)	Non-essential Experimental Population	Open wetlands and lakeshores
Wisconsin	Shawano	Snuffbox (*Epioblasma triquetra*)	Proposed as Endangered	Small to medium-sized creeks and some larger rivers, in areas with a swift current

State	County	Species	Status	Habitat
Wisconsin	Shawano	Karner blue butterfly *(Lycaeides melissa samuelis)*	Endangered	Prairie, oak savanna, and jack pine areas with wild lupine
Wisconsin	Sheboygan	Pitcher's thistle *(Cirsium pitcheri)*	Threatened	Stabilized dunes, and blowout areas
Wisconsin	Taylor	Gray wolf (*Canis lupus*)	Endangered	Northern forested areas
Wisconsin	Trempeleau	Whooping crane (*Grus americanus*)	Non-essential Experimental Population	Open wetlands and lakeshores
Wisconsin	Trempeleau	Eastern massasauga *(Sistrurus catenatus catenatus)*	Candidate	Open to forested wetlands and adjacent uplands
Wisconsin	Trempeleau	Higgins' eye pearly mussel (*Lampsilis Higginsi*)	Endangered	Mississippi River
Wisconsin	Vernon	Higgins' eye pearly mussel *(Lampsilis Higginsi)*	Endangered	Mississippi River
Wisconsin	Vernon	Northern monkshood *(Aconitum noveboracense)*	Threatened	North facing slopes
Wisconsin	Vilas	Canada lynx *(Lynx canadensis)*	Threatened	While no resident populations are known from Wisconsin, the species occasionally occurs in northern forested areas, and counties listed are those with the highest likelihood of occurrence.
Wisconsin	Vilas	Gray wolf (*Canis lupus*)	Endangered	Northern forested areas
Wisconsin	Vilas	Kirtland's warbler *(Dendroica kirtlandii)*	Endangered	Potential breeding in jack pine (5 to 25 years old)
Wisconsin	Walworth	Whooping crane (*Grus americanus*)	Non-essential Experimental Population	Open wetlands and lakeshores
Wisconsin	Walworth	Eastern massasauga *(Sistrurus catenatus catenatus)*	Candidate	Open to forested wetlands and adjacent uplands
Wisconsin	Walworth	Eastern prairie fringed orchid *(Platanthera leucophaea)*	Threatened	Wet grasslands
Wisconsin	Washburn	Canada lynx *(Lynx canadensis)*	Threatened	While no resident populations are known from Wisconsin, the species occasionally occurs in northern forested areas, and counties listed are those with the highest likelihood of occurrence.
Wisconsin	Washburn	Gray wolf (*Canis lupus*)	Endangered	Northern forested areas

State	County	Species	Status	Habitat
Wisconsin	Washburn	Kirtland's warbler *(Dendroica kirtlandii)*	Endangered	Potential breeding in jack pine (5 to 25 years old)
Wisconsin	Washington	Whooping crane (*Grus americanus*)	Non-essential Experimental Population	Open wetlands and lakeshores
Wisconsin	Waukesha	Eastern prairie fringed orchid *(Platanthera leucophaea*)	Threatened	Wet grasslands
Wisconsin	Waupaca	Snuffbox (*Epioblasma triquetra*)	Proposed as Endangered	Small to medium-sized creeks and some larger rivers, in areas with a swift current
Wisconsin	Waupaca	Karner blue butterfly *(Lycaeides melissa samuelis*)	Endangered	Prairie, oak savanna, and jack pine areas with wild lupine
Wisconsin	Waushara	Whooping crane (*Grus americanus*)	Non-essential Experimental Population	Open wetlands and lakeshores
Wisconsin	Waushara	Snuffbox (*Epioblasma triquetra*)	Proposed as Endangered	Small to medium-sized creeks and some larger rivers, in areas with a swift current
Wisconsin	Waushara	Karner blue butterfly *(Lycaeides melissa samuelis*)	Endangered	Prairie, oak savanna, and jack pine areas with wild lupine
Wisconsin	Waushara	Fassett's locoweed *(Oxytropis campestris var. chartacea*)	Threatened	Open sandy lakeshores
Wisconsin	Winnebago	Whooping crane (*Grus americanus*)	Non-essential Experimental Population	Open wetlands and lakeshores
Wisconsin	Winnebago	Eastern prairie fringed orchid *(Platanthera leucophaea*)	Threatened	Wet grasslands
Wisconsin	Wood	Gray wolf (*Canis lupus*)	Endangered	Northern forested areas
Wisconsin	Wood	Whooping crane	Non-essential	Open wetlands and lakeshores
Wisconsin	Wood	Eastern massasauga *(Sistrurus catenatus catenatus)*	Candidate	Open to forested wetlands and adjacent uplands
Wisconsin	Wood	Karner blue butterfly *(Lycaeides melissa samuelis*)	Endangered	Prairie, oak savanna, and jack pine areas with wild lupine

Revised January 2011

Appendix F US 12 Rural Intersection and Private Access Spacing

US 12 Rural Intersection and Private Access Spacing

Project ID 3080-00-09
County N to WIS 26
Dane and Jefferson Counties

TranSmart

The WisDOT Facilities Development Manual Procedure 11-5-5 Attachment 5.1, Access Spacing Guidelines, specifies recommended spacing distances between intersecting roadways (public and private) on rural arterial highways. Table 1 below provides a summary of WisDOT spacing guidelines for intersecting roadways on a principal arterial such as US 12.

Table 1 WisDOT access spacing guidelines for a principal arterial

Intersecting roadway		
Type	**Design year ADT**	**Spacing**
Minor arterial	**>5000**	2 miles
	3000 – 5000	1 mile
	<3000	1 mile
Major collector		1 mile
Minor collector		2000 feet
Local		2000 feet
Private	**>100**	1000 feet
	<100	1000 feet

Distances between intersecting roadways on the US 12 corridor were measured in order to detect spacing deficiencies. The distances between roadway intersections on US 12 in rural areas were then evaluated by WisDOT recommendations per FDM 11-5-5 Attachment 5.1 according to their functional classes: arterials, connectors, and local roads. Spacing data for each roadway class appears in tables 2, 3, and 4 at the end of this report; intersections are catalogued with the corridor's westernmost roads listed first and proceeding eastward in order.

Two highways were determined to have spacing that fell below WisDOT recommendations: WIS 73 and CTH C/Hoard Road. Spacing distances for arterials and collectors intersecting US 12 in the corridor can be found in tables 2 and 3. Both legs of WIS 73 are designated as minor arterials; the north leg experiences traffic volume above 5,000 AADT and the south leg volume falls below 3,000 AADT. The recommended spacing between them is one mile; however, the actual spacing is approximately 2,500 feet. County C/Hoard Road is designated as a major collector. It is located about 3,400 feet from the WIS 26 ramps, which is less than the recommended spacing of one mile for major collectors.

Local road spacing along US 12 within the study corridor can be found in table 4. Twenty-six public roads intersect US 12 between County N and WIS 26 in rural areas, while 24 streets and roads intersect US 12 in the Cambridge urbanized area. Recommended spacing between rural local roads on a principal arterial is 2000 feet. Several local roads along US 12 in the rural areas do not meet WisDOT's recommended spacing of 2000 feet; however, most of these roads have extremely low traffic volumes (less than 200 AADT). It should be noted that several of the intersecting roads with low traffic volumes access fewer than five private properties; some access only one property.

The US 12 corridor also has 210 private access points. Table 5 provides an inventory of all private access points along the US 12 corridor, while the spacing distances for all of these driveways can be found in

table 6; private access points are catalogued westernmost first and proceeding eastward in order. Map exhibits illustrating the driveway inventory can be found at the end of this report.

The spacing distance from each private access to the nearest private or public access to the west was measured and evaluated against the general driveway spacing recommendation of 1,000 feet, as was spacing from the nearest intersection. Access points per functional class segment and per mile were also measured. Per FDM 11-5-5 Attachment 5.1, minimum recommended spacing between private roads and other roads is 1000 feet. Very few of the corridor's access points meet WisDOT's spacing standards. Of greatest concern is the clustering of private access points near each other and near public road intersections in locations where vehicle speeds on US 12 are high (55 mph posted speed limit) and/or visibility is poor. Examples include driveways near the US 12 intersections with Oakland Road and County C/Hoard Road.

The Cambridge urbanized area will be evaluated as part of the traffic operations section of the main report. A number of factors apply to urbanized areas to determine safe access. These include speed, geometry, types of turn movements, and proximity of driveways to intersection functional areas.

Table 2 Spacing between arterials

US 12 Crossroad	Traffic Control	Functional Classification	Spacing* Distance	Spacing* Spacing Criteria Met
County N	Interchange	Minor Arterial		
			6.27 miles	Yes
WIS 73 (north leg)	Stop	Minor Arterial		
			2500 feet	No
WIS 73 (south leg)	Stop	Minor Arterial		
			2.7 miles	Yes
US 18	Stop	Minor Arterial		
			9.5 miles	Yes
WIS 26	Interchange	Principal Arterial		

*Desired spacing between arterials intersecting a principal arterial under study:

Between principal arterials	1 mile (ADT < 3000) or 2 miles (ADT > 3000)
Between principal and minor arterials	1 mile (ADT < 5000) or 2 miles (ADT > 5000)
Between minor arterials	1 mile (ADT < 5000) or 2 miles (ADT > 5000)

Source : Rural Access Spacing Guidelines, FDM 11-5-5 Attachment 5.1

Notes:

Daily traffic volumes for all arterials except WIS 73 (south leg) are greater than 3000 vpd.

WIS 73 (south leg) had 2600 AADT in 2009.

Table 3 Spacing of collectors and arterials along US 12

US 12 Crossroad	Traffic Control	Functional Classification	Spacing* Distance	Spacing* Spacing Criteria Met
County N northbound ramps	Stop	Minor Arterial		
			4.6 miles	Yes
County W/Oak Park Rd	Stop	Major Collector (Oak Park Rd) Minor Collector (County W)		
			1.7 miles	Yes
WIS 73 (north leg)	Stop	Minor Arterial		
			2500 feet	No
WIS 73 (south leg)	Stop	Minor Arterial		
			2.6 miles	Yes
WIS 134	Stop	Major Collector		
			580 feet	N/A
US 18	Stop	Minor Arterial		
			2950 feet	N/A
County B/Spring Street	Stop	Major Collector		
			5.95 miles	N/A
County J	Stop	Minor Collector		
			2.4 miles	Yes
County C/Hoard Road	Stop	Major Collector		
			3400 feet	No
WIS 26 southbound ramps	Stop	Principal Arterial		

*Desired spacing between a minor collector and other collectors or arterials is 2000 feet and one mile between major collectors or a major collector and an arterial.

Source : Rural Access Spacing Guidelines, FDM 11-5-5 Attachment 5.1

Notes:

Daily traffic volumes for all collectors are greater than 1000 vpd.

Highlighted roads are located in the Cambridge urban area and are not subject to rural spacing standards. These intersections are to be evaluated within the Traffic Operations Analysis section of the report.

Table 4 Local road spacing along US 12

US 12 Crossroad	Traffic Control	Functional Classification	Spacing Between Rural Crossroads* Distance	Spacing Between Rural Crossroads* Spacing Criteria Met	Spacing Between Urban Cross Streets Distance	Spacing Between Urban Cross Streets TBD
County N NB ramps	Stop	Minor Arterial				
			1700 feet	No		
North Star Road	Stop	Local				
			2.0 miles	Yes		
County BN/Nora Rd	Stop	Local				
			1.0 mile	Yes		
Deerfield Road	Stop	Local				
			2600 feet	Yes		
Thorstad Road	Stop	Local				
			1870 feet	No		
John Deere Lane	Stop	Local				
			1810 feet	No		
County W/Oak Park Rd	Stop	Major Collector (North, Oak Park Rd) Minor Collector (South, County W)				
			2150 feet	Yes		
Sunny Lane	Stop	Local				
			1.0 mile	Yes		
Nuland Road	Stop	Local				
			1420 feet	No		
WIS 73 (north leg)	Stop	Minor Arterial				
			620 feet	No		
Mikkelson Farm Dr	Stop	Local				
			1910 feet	No		
WIS 73 (south leg)	Stop	Minor Arterial				
			1180 feet	No		
Fadness Road	Stop	Local				
			2690 feet	Yes		
Clearview Road	Stop	Local				
			480 feet	No		
State Farm Road	Stop	Local				
			1.3 miles	Yes		
Rodney Lane	Stop	Local				
			1300 feet	No		
Kenseth Way	Stop	Local				
					1340 feet	
WIS 134	Stop	Major Collector				
					570 feet	
US 18	Stop	Minor Arterial				
					580 feet	
Pinecrest Drive	Stop	Local				
					440 feet	
Madison Street	Stop	Local				
					770 feet	
Pleasant Street	Stop	Local				
					650 feet	
County PQ/Water St	Stop	Local				
					120 feet	
Mills Street	Stop	Local				
					410 feet	
County B/Spring St	Stop	Major Collector				
					140 feet	
Park Street	Stop	Local				
					330 feet	
Lawn Street	Stop	Local				
					350 feet	
High Street	Stop	Local				

US 12 Crossroad	Traffic Control	Functional Classification	Spacing Between Rural Crossroads* Distance	Spacing Criteria Met	Spacing Between Urban Cross Streets Distance	TBD
Simonsen Street	Stop	Local			340 feet	
Second Street	Stop	Local			390 feet	
Park Road	Stop	Local			1790 feet	
Alpine Village Ln	Stop	Local			690 feet	
Golf Side Road	Stop	Local			300 feet	
Sleepy Hollow Rd	Stop	Local			600 feet	
Porter Rd	Stop	Local			1010 feet	
W Cedar Road	Stop	Local			1040 feet	
Marina Lane	Stop	Local			930 feet	
Majestic Circle	Stop	Local			500 feet	
Island Ln	Stop	Local			860 feet	
Airport Road	Stop	Local			1160 feet	
Meadow Drive	Stop	Local			1470 feet	
County A	Stop	Local			600 feet	
Brosig Lane	Stop	Local	1400 feet	No		
County A/Langhoff Ln	Stop	Local	3430 feet	Yes		
Oakland Road	Stop	Local	3150 feet	Yes		
Oestrich Ln	Stop	Local	1.0 mile	Yes		
Trieloff Road	Stop	Local	1140 feet	No		
Ehrke Road	Stop	Local	1700 feet	No		
County J	Stop	Minor Collector	2380 feet	Yes		
County G	Stop	Local	1.4 miles	Yes		
Radloff Ln	Stop	Local	2290 feet	Yes		
County C/Hoard Road	Stop	Major Collector	2850 feet	Yes		
WIS 26 SB Ramps	Stop	Principal Arterial	3400 feet	No		

*Recommended spacing between rural local street and other local streets or higher class roads is 2000 feet. Acceptable intersection spacing is dependent on traffic operations, geometric conditions, and safety considerations.

Source : Rural Access Spacing Guidelines, FDM 11-5-5 Attachment 1

Table 5 Access inventory

Study Access Point Number	84.25 Map ID	Land Use Class	Business Name	Property Address	Parcel Number or Road Name	Notes
PR1		Public Road			County N Interchange Ramps	
PR2		Public Road			Northstar Rd	
1		RES		2298 US 12	71134297300	Also AG
2		AG			71134380020	
3		IND		2272 US 12	71134186000	Also Res
					71134300000	
					71134298300	
4		RES	Grove Acres	2234 US 12	71134192800	Also AG
5		RES		2172 US 12	71134197211	Also Ag
6		RES	Skaar Scattered Acres Inc	2157 US 12	71134480306	Also AG
7		RES		2142 US 12	71134195017	Also AG
8		RES		2093 US 12	71135385030	Also AG
9		RES		2074 US 12	71135293016	Also AG
10		RES		2064 US 12	71135293329	Also AG
11		AG			71135292508	
12		AG		1994 US 12	71135295014	
13		AG			71134380020	
14		AG	Screamin' Norwegian Farm	1924 US 12	71135190001	
15		RES		1971 US 12	71135192401	Also AG
16		RES	Screamin' Norwegian Farm	1924 US 12	71135190001	Also AG
17		AG	Screamin' Norwegian Farm	1872 US 12	71135195006	
18		RES	SK-ARDAL Farms	1893 US 12	71135197200	
19		AG	SK-ARDAL Farms	1893 US 12	71135197200	
20		RES	Screamin' Norwegian Farm	1872 US 12	71135195006	Also AG
PR3		Public Road			County BN/Nora Rd	
21		RES		1821 US 12	71136290651	Also AG
22		AG			71136290008	
23		AG			71136290008	
24		RES		1760 US 12	71136295010	Also AG
25		AG		1762 US 12	71136296800	
26		INST	Liberty Prairie Cemetery	1711 US 12	71136191508	Owned by town of Cottage Grove
27		RES		1668 US 12	71169185104	Also AG
28		AG			71136190009	
29		RES	A.N.D. Stables	1640 US 12	71126180010	Also AG
30		RES	Step Ahead Services Inc	1647 US 12	71136196003	Also COM
PR4		Public Road				
31		RES			71231285210	Also AG
32		AG		1520 US 12	71231287600	
33		AG			71231285200	
34		RES		1495 US 12	71231281909	Also AG
PR5		Public Road			Thorstad Rd	
PR6		Public Road			John Deere Ln	
35		AG	Schusters Playtime Farm	1326 US 12	71230495001	Also AG and RES
PR7		Public Road			County W/Oak Park Rd	
36		AG			71229490027	
PR8		Public Road			Sunny Ln	
37		RES		1133 US 12	71232189600	
38		AG		1138 US 12	71229493202	
39		RES		1130 US 12	71229493506	Also AG

Table 5 Access inventory

Study Access Point Number	84.25 Map ID	Land Use Class	Business Name	Property Address	Parcel Number or Road Name	Notes
40		RES	Olsen Pellet Supply		71229495010	Also AG/COM
					71229500000	
					71229496000	
41		AG			71232181500	
42		RES		1028 US 12	71233285018	Also AG
43		AG		1028 US 12	71233285015	
44		RES		948 US 12	71233295016	Also AG
45		AG		948 US 12	71233295016	
PR9		Public Road			Nuland Rd	
PR10		Public Road			WIS 73	WIS 73
PR11		Public Road	Mikkelson Farms		Mikkelson Farm Dr	
46		RES		788 US 12	71234392301	
PR12		Public Road			WIS 73	WIS 73
47		AG			61203285111	
PR13		Public Road			Fadness Rd	
48		RES		662 US 12	71234491909	
49		AG			61203280018	
50		RES		638 US 12	61203186308	Also AG
PR14		Public Road			Clear View Rd	
PR15		Public Road			State Farm Rd	
52		AG	Vasby Farms Inc		61202280010	
53		AG	Vasby Farms Inc		61202280010	
54		RES		354 US 12	61202188500	
55		RES		355 US 12	61202190206	Also Ag
56		COM		300 US 12	61202195612	Cindys Classics
57		AG		282 US 12	61202195020	
58		COM				Billboard Access
59		AG		275 US 12	61202198360	
PR16		Public Road			Rodney Ln	
PR17		Public Road			Kenseth Way	
PR18		Public Road			WIS 134	
60		COM	Shell Station	424 W Main St	61201399111	
PR19		Public Road			US 18	
61		COM	Shell Station	424 W Main St	61201399111	
62		COM	Shell Station	420 W Main St	61201398911	
63		COM		412 W Main St	61201398708	Subway
64		COM	Piggly Wiggly	100 Jefferson St	61201492409	
65		RES		410 W Main St	61212200453	
PR20		Public Road			Pinecrest Dr	
PR21		Public Road			Madison St	
66		COM	BP Station	279 W Main St	61212203512	
67		COM	BP Station	279 W Main St	6122203512	
68		COM	Next Curve Cafe	275 W Main St	6122203932	
69		RES		272 W Main St	61212130591	Apt Complex
70		INST	Cambridge Fire Dept and EMS	271 W Main St	61212130010	
PR22		Public Road			Pleasant St	
71		COM	House to Home		61212133740	
72		COM	Cambridge State Bank	221 W Main St	61212143668	
73		COM	Cambridge State Bank	221 W Main St	61212143337	
74		COM	Riverview Place		61212132910	

Table 5 Access inventory

Study Access Point Number	84.25 Map ID	Land Use Class	Business Name	Property Address	Parcel Number or Road Name	Notes
75		COM	Fluffys Botique	219 W Main St	61212143051	
PR23		Public Road			County PQ	
PR24		Public Road			Mills St	
PR25		Public Road			County B/Spring St	
PR26		Public Road			Park St	
76		COM	The Victorian of Cambridge	109 E Main St	61212161522	
77		RES		117 E Main St	61212161746	
78		RES		112 E Main St	61212166625	
79		RES	Acurate Apprasial	116 E Main St	61212166732	
PR27		Public Road			Lawn St	
80		RES		209 E Main St	61212163039	
PR28		Public Road			High St	
81		RES		305 E Main St	61212163824	
82		RES		307 E Main St	61212163931	
83		RES		309 E Main St	61212164047	
84		RES		314 E Main Street	61212164949	
85		RES			61212165046	
PR29		Public Road			Simonsen St	
86		INST	Presbyterian Church	403 E Main St	111-0613-0723-045	Church
87		RES		403 E Main St	111-0613-0723-045	
88		RES		407 E Main St	111-0613-0723-046	
89		RES		W9686 US 12	022-0613-0723-034	
89.1		RES				Shared Access
PR30		Public Road			Second St	
90		RES		W9671 US 12	022-0613-0723-042	
91		RES		W9658 US 12	022-0613-0723-037	
92		COM	Lake Ripley Family Resturant	W9652 US 12	022-0613-0723-038	
93		COM	Lake Ripley Family Resturant	W9644 US 12	022-0613-0723-049	
94		COM	Lake Ripley Family Resturant	W89644 US 12	022-0613-0723-049	
95		COM	Mink Farm Tavern	W9634 US 12	022-0613-0723-053	Also RES
96		COM	Mink Farm Tavern	W9624 US 12	022-0613-0723-040	
97		COM	Lake Ripley Country Club	W9575 US 12	022-0613-0731-000	
98		RES		W9618 US 12	022-0613-0723-041	
99		RES		W9606 US 12	022-0613-0723-006	
100		RES		W9598 US 12	022-0613-0726-009	
101		COM	Lake Ripley Golf Club	W9575 US 12	022-0613-0731-000	Golf Course
102		RES		W9588 US 12	022-0613-0724-007	
103		RES		W9582 US 12	022-0613-0724-008	
104		COM	Lake Ripley Golf Club	W9575 US 12	022-0613-0731-000	Golf Course
PR31		Public Road			Park Rd	
105	224	COM	Lake Ripley Lanes		022-0613-0731-006	
106		COM	Sports Page Bar and Grill	W9535 US 12	022-0613-0731-001	
107	3	COM	Sports Page Bar and Grill	W9535 US 12	022-0613-0731-001	
108	4	COM	Vellas Carts and Services	W9529 US 12	022-0613-0731-002	
PR32		Public Road			Alpine Village Ln	
PR33		Public Road			Golf Side Ln	
109	223	RES		W9482 US 12	022-0613-0742-049	
110	6	RES		W9575 US 12	022-0613-0731-000	

Table 5 Access inventory

Study Access Point Number	84.25 Map ID	Land Use Class	Business Name	Property Address	Parcel Number or Road Name	Notes
111	7	RES		W9575 US 12	022-0613-0731-000	
PR34		Public Road			Sleepy Hollow Rd	
112	221	INST	Faith Evangelical Lutheran Church	W9460 US 12	066-0613-0743-067	Church
113	220	RES				
114	219	RES		W9442 US 12	022-0613-0743-073	
PR35		Public Road			Porter Ed	
115	217	RES		W9430 US 12	022-0613-0743-053	
116	9	AG			022-0613-1812-000	
117	214	RES		W9410 US 12	022-0613-1812-005	Also AG
PR36		Public Road			W Cedar Rd	
118	213	RES		W9368 US 12	022-0613-1811-028	
119	212	RES		W9354 US 12	022-0613-1811-026	
PR37		Public Road			Marina Ln	
PR38		Public Road			Majestic Circle	
120	11	RES		W9271 US 12	022-0613-1723-000	Also AG
PR39		Public Road			Island Ln	
121	209	RES		W9156 US 12	022-0613-1721-000	Also AG
PR40		Public Road			Airport Rd	
122	208	RES		W9165 US 12	022-0613-1721-000	Also AG
123	207	AG		W9165 US 12	022-0613-1721-000	
124	14	RES		W9107 US 12	022-0613-1724	Also AG
125	206	RES		W9084 US 12	022-0613-1713-016	
PR41		Public Road			Meadow Dr	
126	15	INST		W 9041 US 12	022-0613-1713-005	GOV Land
PR42		Public Road			County A	
127	16	AG		W9005 US 12	022-0613-1713-006	
128	17	RES		W8999 US 12	022-0613-1741	
129	18	RES		W8947 US 12	022-0613-1714-000	Also AG
130	205	RES		W8946 US 12	022-0613-1711-003	Also AG
PR43		Public Road			Brosig Ln	
131	204	RES		W8882 US 12	022-0613-1623-0001	Also AG
132	19	RES		W8863 US 12	022-0613-1632-002	
133	20	AG			022-0613-1632-000	
134	202	RES		W8752 US 12	022-0613-1634-000	Also AG
135	21	AG		W8752 US 12	022-0613-1634-000	
PR44		Public Road			County A/Langhoff Ln	
136	200	RES		W8678 US 12	022-0613-1643-0001	
137	199	AG			022-0613-2111-000	
138	22	RES		W8599 US 12	022-0613-2111-012	
139	23	RES		W8575 US 12	022-0613-2111-013	
140	198	RES		W8586 US 12	022-0613-2111-009	Also AG
141	197	COM		W8564 US 12	022-0613-2111-008	Also AG
142	195	COM		W8550 US 12	022-0613-2111-007	
143	193	COM	Kranky's Pub and Grill	W8546 US 12	022-0613-2111-006	
144	191	COM	Old Town Hall	W8528 US 12	022-0613-2111-005	
145	190	RES		W8520 US 12	022-0613-2111-004	
146	189	RES		W8514 US 12	022-0613-2111-003	
PR45		Public Road			Oakland Rd	
147	188	AG			022-1613-2224-000	
148	24	RES		W8354 US 12	022-0613-2224-022	Also AG

Table 5 Access inventory

Study Access Point Number	84.25 Map ID	Land Use Class	Business Name	Property Address	Parcel Number or Road Name	Notes
149	25	AG		W8293 US 12	022-0613-2213-001	
150	187	RES		W8274 US 12	022-0613-2213-002	Also AG
151	186	AG		W8274 US 12	022-0613-2213-002	
152	26	RES		W8135 US 12	022-0613-2214-000	Also AG
153	27	RES		W8135 US 12	022-0613-2214-000	
PR46		Public Road			Oestreich Ln	
154	182	RES		W8004 US 12	022-0613-2323-003	
PR47		Public Road			Trieloff Rd	
155	181	RES		W7996 US 12	022-0613-2321-001	
156	826	RES		W7934 US 12	022-0613-2324-000	Also AG
157	29	RES		W7937 US 12	022-0613-2324-002	Also AG
PR48		Public Road			Ehrke Rd	
158	30	RES		W7847 US 12	022-0613-2313-002	
159	802	AG			022-0613-2313-000	
160	31	RES		W7791 US 12	022-0613-2342-000	Also AG
161	177	RES		W7772 US 12	022-0613-2314-000	Also AG
162	807	AG			022-0613-2341-000	
163	176	RES		W7742 US 12	022-0613-2341-001	Also AG
PR49		Public Road			County J	
164	33	AG	Busy Barns Adventure Farms	W7675 US 12	022-0613-2432-001	Also RES and AG
165	34	AG	Busy Barns Adventure Farms	W7591 US 12	022-0613-2433-000	Also RES and AG
166	35	RES		W7555 US 12	022-0613-2434-002	
167	not on map	AG			022-0613-2434-000	
168	36	AG	Awesome Acres	W7545 US 12	022-0613-2434-001	
169	175	RES		W7508 US 12	022-0613-2434-003	
169.1	824	AG			022-0613-2434-001	
170	174	RES		W7492 US 12	022-0613-2443-003	
171	560	AG			022-0613-2443-002	
172	38	RES		W7485 US 12	022-0613-2449-001	Also AG
173	173	RES		W7472 US 12	022-0613-2443-004	
174	810	AG			022-1613-2443-002	
175	172	RES		W7416 US 12	022-0613-2444-000	
176	171	RES		W7416 US 12	022-0613-2444-000	
177	170	COM	LP Home Remodeling	W7416 US 12	022-0613-2444-000	
178	169	INST			022-0613-2511-001	
179	168	AG			022-0613-2511-003	
180	40	RES		N3187 US 12	014-0614-3023-000	Also AG
181	41	AG		N3187 US 12	014-0614-3023-000	
PR50		Public Road			County G	
182	not on map	AG			014-0614-3024-000	
183	165	AG			014-0614-3024-000	
184	42	RES		N3121 US 21	014-0614-3024-002	
185	164	RES		N3114 US 12	014-0614-3024-001	Also AG
186	163	RES		N3104 US 12	014-0614-3024-003	Also AG
187	43	RES	Chucks Metal Finishing	N3115 US 12	014-0614-3024-004	Also COM
188	44	AG		N3089 US 12	014-0614-3031-000	
189	not on map	AG		N3114 US 12	014-0614-3024-003	

Table 5 Access inventory

Study Access Point Number	84.25 Map ID	Land Use Class	Business Name	Property Address	Parcel Number or Road Name	Notes
190	not on map	AG		N3059 US 12	014-0614-3042-001	
191	not on map	AG			014-0614-3013-000	
192	45	RES		N3059 US 12	014-0614-3042-001	Also AG
PR51		Public Road			Radloff Ln	
193	46	RES		N3019 US 12	014-0614-3042-003	
194	162	RES		N3020 US 12	014-0614-3042-000	
195	821	AG			014-0614-3044-005	
196	151	RES		N2952 US 12	014-0614-3044-000	Also AG
197	48	AG			014-0614-3044-004	
PR52		Public Road			County C/Hoard Rd	
198	159	RES			014-0614-3044-002	Address on Hoard Road
199	51	RES			016-0614-3111-000	Address on County C
200	52	RES			016-0614-3111-000	Address on County C
201	158	RES		W6906 US 12	016-0614-3111-001	
202	157	RES		W6906 US 12	016-0614-3111-001	
203	156	RES		W6898 US 12	016-0614-3222-001	
204	155	RES		W6844 US 12	016-0614-3222-000	Also AG
205	53	AG		W6844 US 12	016-0614-3222-000	
206		AG		W6844 US 12	016-0614-3222-000	
207		RES		W6744 US 12	016-0614-3224-001	Also AG
208		RES		W6725 US 12	016-0614-3224-000	
PR53		Public Road			WIS 26 EB Ramps	

Table 6 Access driveway spacing

Access Number	Spacing from nearest access to the west	Spacing from nearest intersection	Meets FDM spacing guidelines*	Access points per segment (By Functional Class)	Average access points per mile
PR1	-	-	Yes		
PR2	1680	1680	Yes		
1	1300	1300	Yes		
2	440	-	No		
3	440	-	No		
4	860	-	No		
5	1210	-	No		
6	330	-	No		
7	340	-	No		
8	870	-	No		
9	150	-	No		
10	450	-	No		
11	1280	-	No		
12	210	-	No		
13	210	-	No		
14	500	-	No		
15	500	-	No		
16	890	-	No		
17	90	-	No		
18	530	-	No		
19	90	990	No		
20	420	580	No		
PR3	580	-	No		
21	620	620	No		
22	210	830	No		
23	210	830	No		
24	1020	-	No		
25	1020	-	No		
26	940	-	No		
27	1000	-	No	60	8.6
28	1000	-	No		
29	440	1120	No		
30	60	1060	No		
PR4	1050	-	No		
31	720	730	No		
32	720	710	No		
33	540	1260	No		
34	540	1260	No		
PR5	1330	-	Yes		
PR6	1870	-	No		
35	280	280	No		
PR7	1520	-	Yes		
36	2130	-	No		
PR8	2130	-	No		

Access Number	Spacing from nearest access to the west	Spacing from nearest intersection	Meets FDM spacing guidelines*	Access points per segment (By Functional Class)	Average access points per mile
37	220	380	No		
38	220	380	No		
39	170	170	No		
40	760	1160	No		
41	330	-	No	60	8.6
42	1180	-	Yes		
43	1180	-	Yes		
44	1850	820	No		
45	1850	820	No		
PR9	810	-	No		
PR10	-	-	No		
PR11	-	-	No	Segment AB - 7 Miles	
46	1680	220	No		
PR12	240	-	No		
47	320	320	No		
PR13	860	-	No		
48	1350	1340	Yes		
49	1350	1340	Yes		
50	560	770	No		
PR14	770	-	No		
PR15	490	-	No		
52	3450	-	No		
53	3460	-	No		
54	970	-	No	20	7.4
55	120	-	No		
56	1110	1200	No		
57	410	800	No		
58	350	440	No		
59	350	440	No		
PR16	440	-	No		
PR17	1310	-	Yes		
PR18	1330	-	No	Segment C - 2.7 Miles	
60	330	220	No		
PR19	220	-	No		
Access points 61 - 112 are within the village of Cambridge, rural spacing guidelines do not apply.					
PR34	-	-	No		
112	270	270	No		
113	580	125	No		
114	120	5	No		
PR35	5	1000	No		
115	90	90	No		
116	180	260	No		
117	120	400	No		
PR36	590	910	No		
118	430	390	No		

Access Number	Spacing from nearest access to the west	Spacing from nearest intersection	Meets FDM spacing guidelines*	Access points per segment (By Functional Class)	Average access points per mile
119	199	300	No		
PR37	300	470	No		
PR38	470	470	No		
120	170	150	No		
PR39	690	860	No		
121	1130	60	No		
PR40	0	1450	No		
122	60	0	Yes		
123	510	510	No		
124	140	640	No		
125	125	660	No		
PR41	660	620	No		
126	50	50	No		
PR42	570	620	No		
127	0	0	Yes		
128	0	0	Yes		
129	460	460	No		
130	390	520	No		
PR43	530	-	No		
131	270	270	No		
132	490	760	No		
133	210	990	No		
134	1540	900	No		
135	1540	900	No	68	12.8
PR44	880	-	No		
136	340	340	No		
137	1080	1430	No		
138	270	-	No		
139	440	1000	No		
140	80	930	No		
141	100	830	No		
142	70	760	No		
143	190	580	No		
144	170	390	No		
145	100	280	No		
146	40	240	No		
PR45	240	-	No		
147	1620	1620	Yes		
148	1620	1620	Yes		
149	1220	-	No		
150	210	-	No		
151	145	-	No		
152	1580	700	No		
153	140	550	No		
PR46	550	-	No		

Access Number	Spacing from nearest access to the west	Spacing from nearest intersection	Meets FDM spacing guidelines*	Access points per segment (By Functional Class)	Average access points per mile
154	1080	80	No	Segment E - 5.3 Miles	
PR47	90	-	No		
155	50	50	No		
156	520	570	No		
157	460	650	No		
PR48	660	-	No		
158	360	370	No		
159	540	910	No		
160	530	920	No		
161	530	920	No		
162	130	790	No		
163	350	450	No		
PR49	440	-	No		
164	580	590	No	151	48.7
165	1080	-	Yes		
166	750	-	No		
167	100	-	No		
168	100	-	No		
169	520	-	No		
169.1	41		No		
170	74	-	No		
171	50	-	No		
172	160	-	No		
173	120	-	No		
174	620	-	No		
175	360	-	No		
176	60	-	No		
177	300	-	No		
178	1170	1280	No		
179	110	1170	No		
180	500	650	No		
181	150	500	No		
PR50	510	-	No		
182	410	410	No		
183	680	1100	No		
184	70	1090	No		
185	60	1030	No		
186	140	890	No		
187	140	890	No		
188	130	730	No		
189	50	690	No		
190	500	180	No		
191	500	180	No		
192	180	-	No		
PR51	180	-	No		

Access Number	Spacing from nearest access to the west	Spacing from nearest intersection	Meets FDM spacing guidelines*	Access points per segment (By Functional Class)	Average access points per mile
193	720	720	No		
194	720	720	No		
195	650	1370	No		
196	500	960	No		
197	500	960	No		
PR52	960	-	No		
198	210	210	No		
199	210	210	No		
200	100	330	No		
201	100	330	No		
202	70	410	No		
203	180	590	No		
204	750	1330	No		
205	750	1330	No		
206	770	1280	No		
207	780	510	No	Segment FG - 3.1 Miles	
208	310	200	No		
PR53	190	-	No		

*Per FDM 11-5-5 Attachment 1, on a principal arterial the recommended minimum spacing between a private driveway and other access of any type is 1000 feet.

1 of 5

Access Inventory

Study

US 12 Corridor Preservation Study

1 in = 1000 ft

TranSmart

Access Inventory

US 12 Corridor Preservation Study

1 in = 1000 ft

TranSmart

Olsen Pellet Supply

40 41 42 43 44 45

PR9 PR10 PR11 PR12 PR13 PR14 PR15 PR16 PR17 PR18

Mikkelson Farms

46 47 48 49 50

Vasby Farms Inc

52 53 54 55 56 57 58 59

12 73 134 18 PQ B

Shaul Rd

Shaul Ln

Nuland Rd

Faldness Rd

Clear View Rd

State Farm Rd

Kenseth Way

Rodney Ln

Park Rd

Beach Ct

Sleepy Hollow Rd

Bilstad St

Townsend St

Terrace

Town of Deerfield

Town of Christiana

See Map 5 for Village of Cambridge Data

Access Locations

- Agricultural
- Residential
- Commercial
- Government/Institutional
- Industrial
- Public Road

Numbers near access locations correspond to the Access Inventory Table

Access Inventory

US 12 Corridor Preservation Study

1 in = 1000 ft

TranSmart

4 of 5

Access Inventory

US 12 Corridor Preservation Study

1 in = 1000 ft

TranSmart

5 of 5

Access Inventory

US 12 Corridor Preservation Study

1 in = 300 ft

TranSmart

Appendix G Bicycle, Snowmobile, and Other Recreational Maps

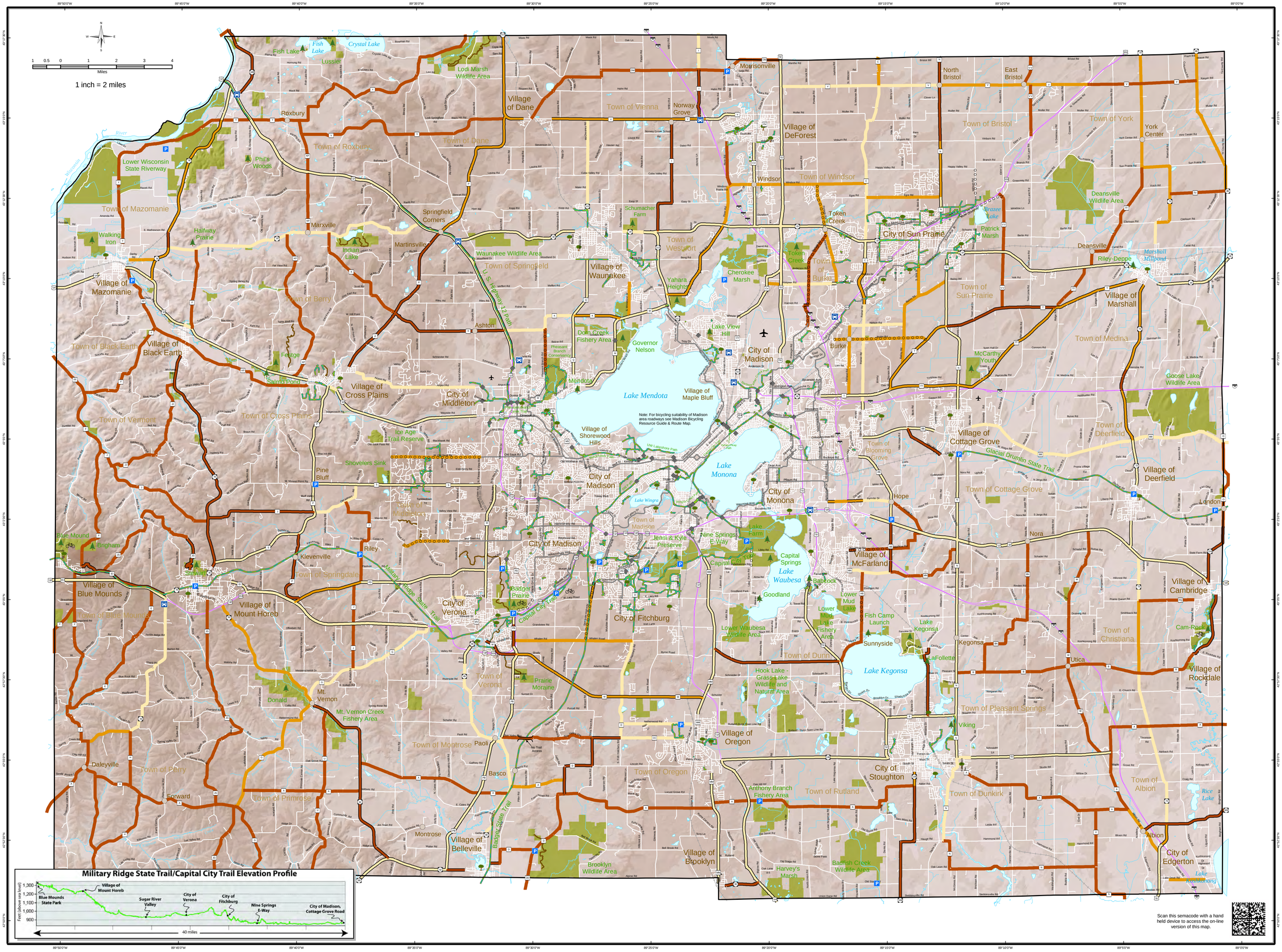
1 inch = 2 miles
Miles
Lake Mendota
Lake Monona
Lake Waubesa
Lake Kegonsa
Lake Wingra
Lake Kegonsa
Lake Koshkonong
Lake Mendota
Village of Maple Bluff
Village of Shorewood Hills
Village of Dane
Town of Vienna
Norway Grove
Morrisonville
Village of DeForest
Town of Windsor
Windsor
Town of Bristol
North Bristol
East Bristol
Town of York
York Center
Deansville Wildlife Area
Deansville
Riley-Deppe
Marshall Millpond
Village of Marshall
Town of Medina
Goose Lake Wildlife Area
Town of Deerfield
Village of Deerfield
Village of Cottage Grove
Town of Cottage Grove
Glacial Drumlin State Trail
London
Village of Cambridge
Town of Christiana
Cam-Rock
Village of Rockdale
Town of Albion
Rice Lake
Albion
City of Edgerton
Village of Oregon
Town of Oregon
City of Stoughton
Town of Dunkirk
Town of Pleasant Springs
Viking
Utica
Kegonsa
LaFollette
Sunnyside
Hope
Nora
Village of McFarland
Babcock
Goodland
Lower Waubesa Wildlife Area
Lower Mud Lake Fishery Area
Fish Camp Launch
Hook Lake - Grass Lake Wildlife and Natural Area
Town of Dunn
Town of Rutland
Anthony Branch Fishery Area
Badish Creek Wildlife Area
Harvey's Marsh
Village of Brooklyn
Brooklyn Wildlife Area
Village of Belleville
Montrose
Town of Montrose
Paoli
Basco
Town of Verona
Village of Verona
City of Verona
City of Fitchburg
Prairie Moraine
Mt. Vernon
Mt. Vernon Creek Fishery Area
Donald
Daleyville
Town of Perry
Forward
Town of Primrose
Village of Blue Mounds
Town of Blue Mounds
Village of Mount Horeb
Blue Mound
Brigham
Klevenville
Town of Springdale
Riley
Badger Prairie
Capital City Trail
Military Ridge State Trail
Badger State Trail
Nine Springs E-Way
Jenni & Kyle Preserve
Capital Springs
City of Monona
City of Madison
Town of Madison
Village of Middleton
Town of Middleton
Pine Bluff
Shovelers Sink
Ice Age Trail Reserve
Village of Cross Plains
Town of Cross Plains
City of Middleton
Town of Vermont
Salmon Pond
Fetige
Village of Black Earth
Town of Black Earth
Village of Mazomanie
Town of Mazomanie
Walking Iron
Lower Wisconsin State Riverway
Phil's Woods
Halfway Prairie
Roxbury
Town of Roxbury
Lussier
Fish Lake
Crystal Lake
Lodi Marsh Wildlife Area
Marxville
Indian Lake
Martinsville
Springfield Corners
Town of Springfield
Waunakee Wildlife Area
Village of Waunakee
Ashton
Dorn Creek Fishery Area
Pheasant Branch Conservancy
Governor Nelson
Mendota
Lake View Hill
Yahara Heights
Cherokee Marsh
Schumacher Farm
Town of Westport
Token Creek
Town of Burke
Burke
City of Madison
Patrick Marsh
Brazeo Lake
City of Sun Prairie
Town of Sun Prairie
McCarthy Youth Creek
U.S. Highway 12 Path
Note: For bicycling suitability of Madison area roadways see Madison Bicycling Resource Guide & Route Map.
Military Ridge State Trail/Capital City Trail Elevation Profile
Feet (above sea level)
1,300
1,200
1,100
1,000
900
Blue Mounds State Park
Village of Mount Horeb
Sugar River Valley
City of Verona
City of Fitchburg
Nine Springs E-Way
City of Madison, Cottage Grove Road
40 miles
Scan this semacode with a hand held device to access the on-line version of this map.

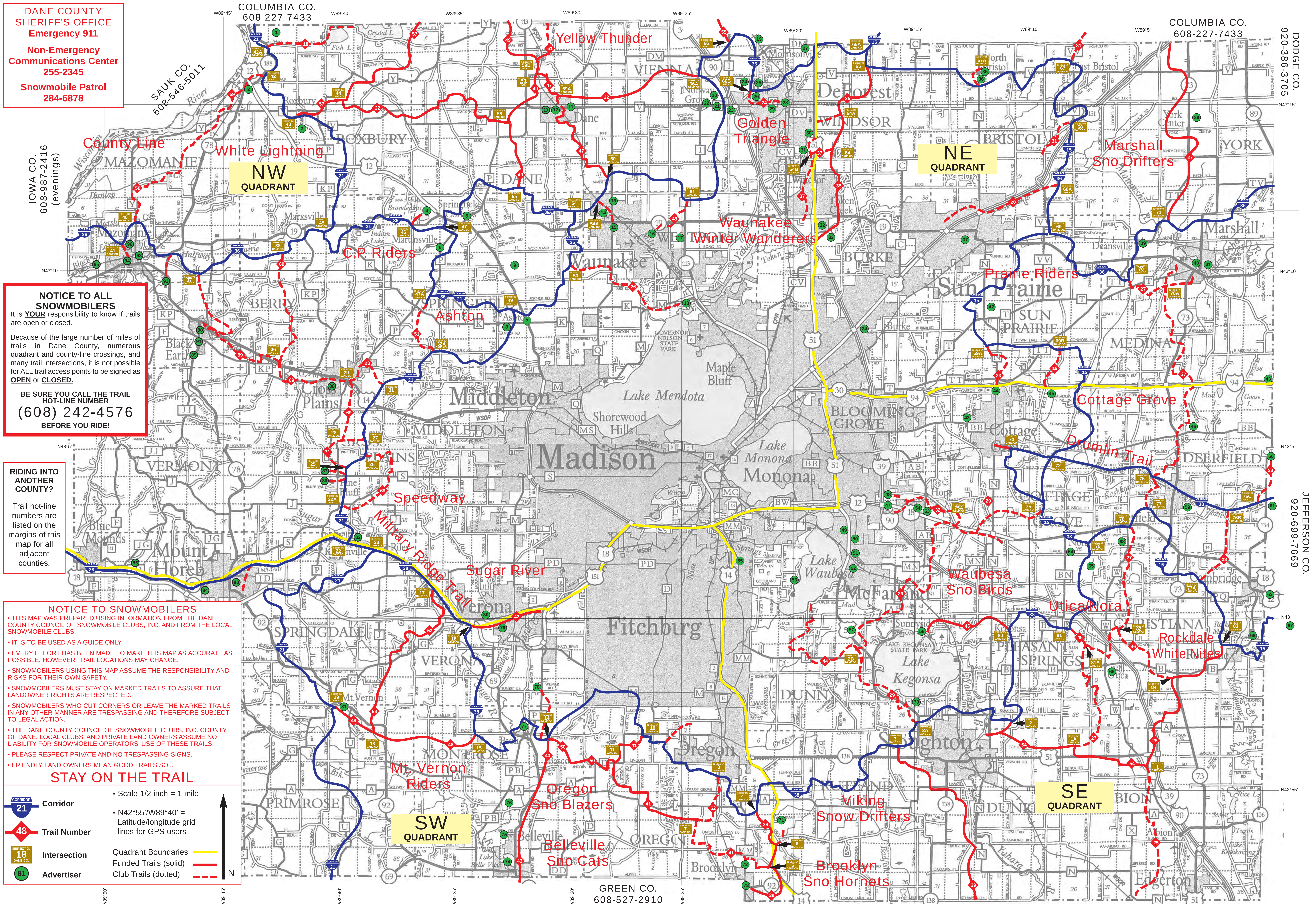

DANE COUNTY SHERIFF'S OFFICE
Emergency 911

Non-Emergency Communications Center 255-2345

Snowmobile Patrol 284-6878

NOTICE TO ALL SNOWMOBILERS

It is **YOUR** responsibility to know if trails are open or closed.

Because of the large number of miles of trails in Dane County, numerous quadrant and county-line crossings, and many trail intersections, it is not possible for ALL trail access points to be signed as **OPEN** or **CLOSED.**

BE SURE YOU CALL THE TRAIL HOT-LINE NUMBER
(608) 242-4576
BEFORE YOU RIDE!

RIDING INTO ANOTHER COUNTY?

Trail hot-line numbers are listed on the margins of this map for all adjacent counties.

NOTICE TO SNOWMOBILERS

- THIS MAP WAS PREPARED USING INFORMATION FROM THE DANE COUNTY COUNCIL OF SNOWMOBILE CLUBS, INC. AND FROM THE LOCAL SNOWMOBILE CLUBS.
- IT IS TO BE USED AS A GUIDE ONLY
- EVERY EFFORT HAS BEEN MADE TO MAKE THIS MAP AS ACCURATE AS POSSIBLE, HOWEVER TRAIL LOCATIONS MAY CHANGE.
- SNOWMOBILERS USING THIS MAP ASSUME THE RESPONSIBILITY AND RISKS FOR THEIR OWN SAFETY.
- SNOWMOBILERS MUST STAY ON MARKED TRAILS TO ASSURE THAT LANDOWNER RIGHTS ARE RESPECTED.
- SNOWMOBILERS WHO CUT CORNERS OR LEAVE THE MARKED TRAILS IN ANY OTHER MANNER ARE TRESPASSING AND THEREFORE SUBJECT TO LEGAL ACTION.
- THE DANE COUNTY COUNCIL OF SNOWMOBILE CLUBS, INC. COUNTY OF DANE, LOCAL CLUBS, AND PRIVATE LAND OWNERS ASSUME NO LIABILITY FOR SNOWMOBILE OPERATORS' USE OF THESE TRAILS
- PLEASE RESPECT PRIVATE AND NO TRESPASSING SIGNS.
- FRIENDLY LAND OWNERS MEAN GOOD TRAILS SO...

STAY ON THE TRAIL

Corridor (CORRIDOR 21)
Trail Number (48)
Intersection (INTERSECTION 18 DANE CO.)
Advertiser (81)

- Scale 1/2 inch = 1 mile
- N42°55'/W89°40' = Latitude/longitude grid lines for GPS users

Quadrant Boundaries
Funded Trails (solid)
Club Trails (dotted)
N

1. Steve's Arboretum
2. Green Acres
3. Verns' Dorf House
4. The Whippoorwill
5. Springfield Inn
6. The Keg
7. Game Time Tap
8. Connie's Home Plate
9. The Missouri Tavern
10. Dane Kwik Mart
11. Peg & Doc's Bar & Grill
12. The Pup
13. Rex's Innkeeper
14. Village Mobile
15. Meffert Oil Co., Inc.
16. Culver's Waunakee
17. Carl F. Statz & Sons, Inc.
18. The Willows Tavern
19. Tamarack
20. Culver's - DeForest
21. Tiger Mart
22. Comfort Inn & Suites
23. Rider's BP
24. Holiday Inn Express
25. The Timber's
26. DeForest Family Restaurant
27. Johnson Sales
28. Golden Triangle Drifters
29. Sunset Grill
30. Redline Mobile Automotive & Car Wash
31. Club 51
32. Truckers Inn Truckstop
33. Pine Cone Restaurant & Bakery
34. Mad City Power Sports
35. Gerk's Junction
36. Club Bristol Show Lounge
37. Hanley
38. New York Center Tap
39. Nelson's Crossing
40. Cenex - Marshall
41. Mindy's Silver Fox Bar & Grill
42. Buckshots
43. Voit Bobcat & Landscaping Service
44. Cottage Grove Citgo
45. Doubledays Northside Meats & Deli
46. Deerfield Rod & Gun Club
47. Reverend Jim's Road House
48. Suter's Speed Shop
49. Green Lantern Restaurant
50. Park Side Pub
51. Tom's Auto Center
52. The Beach House Restaurant and Bar
53. CrossRoads Tavern
54. Safeguard Storage
55. Mike's Towing Inc.
56. Christy's Landing
57. Beck's Bar & Grill
58. Springers on Lake Kegonsa
59. Kurt's Never Inn
60. Kroghville Oasis
61. London Depot
62. The Sports Page Bar & Grill
63. Liberty Corners
64. Nora's Tavern
65. Utica/Nora Area Trailblazers
66. Heather's Bar & Grill
67. The Knotty Pine Pub & Grill
68. Finco Concrete
69. Mitch's Utica Bar
70. Quam's Motor Sports
71. White Rock Bar
72. Brooklyn Mini Mart
73. Anchor Club
74. Belle Grille
75. Schwoegler Sugar River Lanes
76. C&R Yamaha
77. Paoli Pub in Paoli
78. Old Duffer's Pub
79. 5th Quarter Sports Bar & Grill
80. Monte's Grill & Pub
81. Steven & Kelly's Gone Fish Inn
82. Riley Tavern
83. Village Inn Motel
84. Cenex Premier Co-op
85. Extreme Motorsports II LLC
86. The Red Mouse
87. Morgan's Bar and Grill
88. Kurt's On Main
89. Stone Soup Cafe
90. The Shoe Box
91. The Shack Bar & Grill
92. Rookies Food & Spirits
93. Mazo Hardware & Rental
94. R & J's Saloon
95. Meigs Inc.
96. The Old Feed Mill

Quadrant Boundaries

NW: Hwy. 51, Military Ridge Trail
NE: Hwy. 51, I-94
SW: Military Ridge Trail, Hwy. 14
SE: I-94, Hwy. 14

Note: Military Ridge Trail is open if either the NW or SW quadrants are open

Dane County Council of Snowmobile Clubs thanks Rockford Map Publishers Inc. for allowing our use of their copyrighted Dane County township maps as worksheets during the production of this snowmobile trail map.

NO TWO, THREE OR FOUR WHEELERS PERMITTED ON TRAILS

JEFFERSON COUNTY BICYCLE PLAN MAP

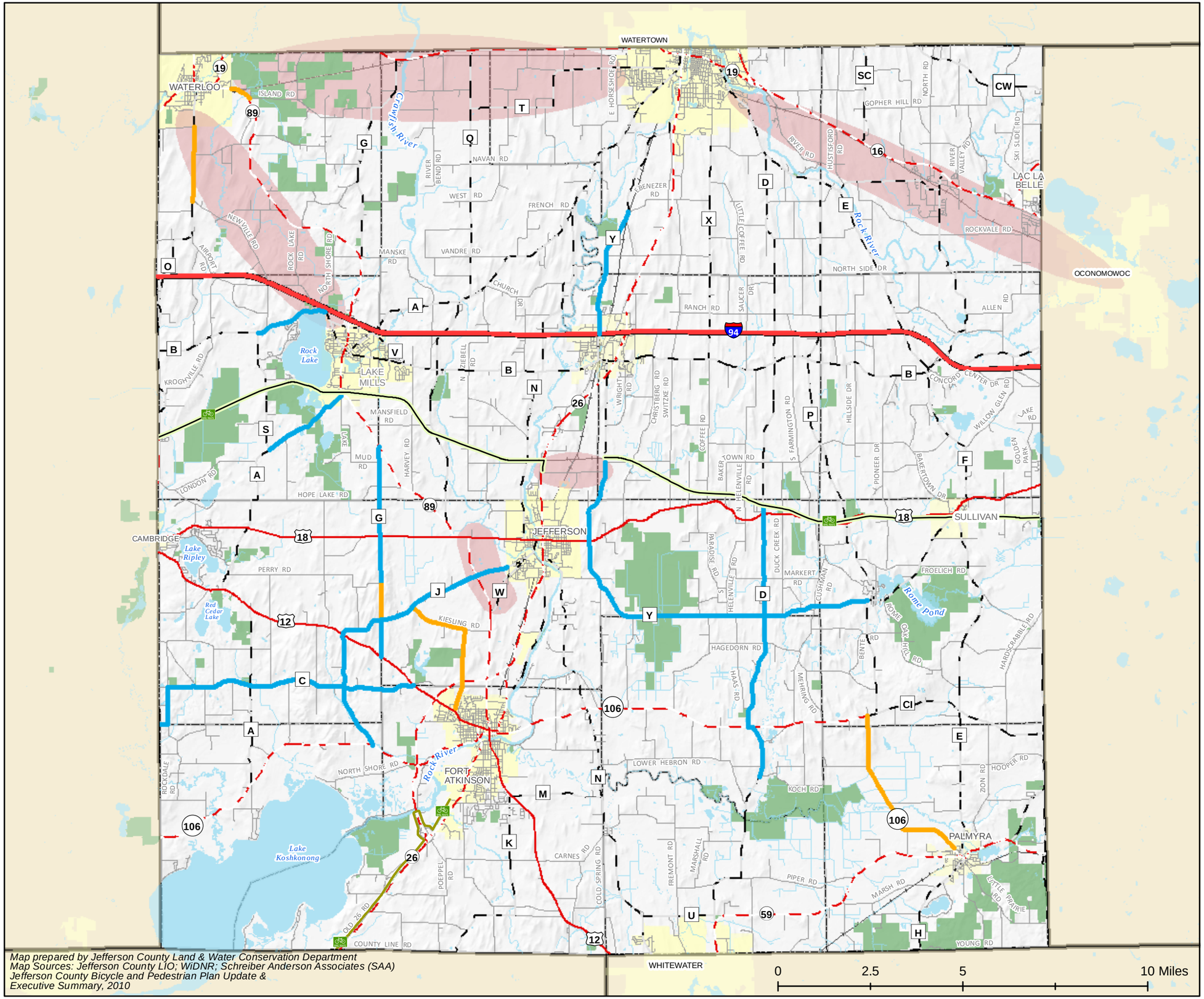

PLANNED IMPROVEMENTS

- OFF ROAD COORIDORS
- NEAR TERM IMPROVEMENTS (on-road facility)
- FUTURE IMPROVEMENTS(on-road facility)

EXISTING OFF ROAD TRAILS

- Glacial Drumlin Trail (State)
- Glacial River Trail (County)

Public Land

Includes: Federal, State & Local

FURTHER DESCRIPTIONS

Off Road Corridors: Will typically be a 10 foot wide bicycle path. Exact route and surface to be determined through follow-up design. Surface may be asphalt or crushed stone. Implementation of route alternative analysis and design as soon as possible with path development expedited through multiple funding sources.

Near Term Improvements: Will be widened, paved shoulders on existing roadways (recommended as 5 foot shoulders for safety). Implementation as soon as possible and within 5 years.

Future Improvements: Will be widened, paved shoulders on existing roadways (recommended as 5 foot shoulders for safety). Implementation anticipated beyond 5 years.

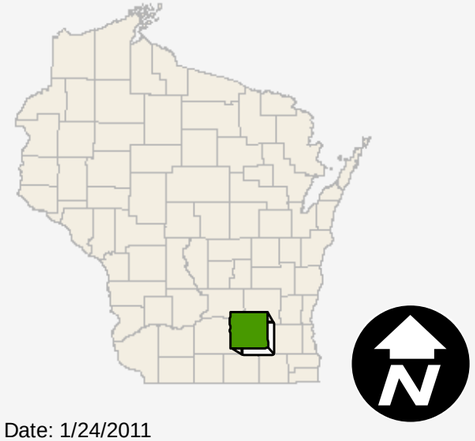

Date: 1/24/2011

Map prepared by Jefferson County Land & Water Conservation Department
Map Sources: Jefferson County LIO; WiDNR; Schreiber Anderson Associates (SAA)
Jefferson County Bicycle and Pedestrian Plan Update & Executive Summary, 2010

- COUNTY TRAILS (green)
- CLUB TRAILS (red)
- GLACIAL DRUMLIN STATE TRAIL (blue)
- GAS (red)
- CORRIDOR TRAIL MARKINGS (blue)
- SPONSORS (red)
- INTERSECTION MARKER

The Jefferson County Snowmobile Alliance would like to thank every business on this map along with the individual Snowmobile Clubs that are members of the JCSA for their continued support of the sport of snowmobiling. Without the support of these sponsors, this trail system and map would not be possible.

JOIN A CLUB!

For information on joining a local club, you may contact the following people:

Joe Nehmer
Jefferson County Parks Director
and County Trail Coordinator
Jefferson County Courthouse
Jefferson WI 53549
(920) 674-7260

Online Snowmobile Registraton
http://dnr.wi.gov/topic/snowmobile/
$1.00 counter fee for renewals only
DNR: Lance Stock
Trail Manager Glacial Drumlin State Trail
1213 S. Main St.
Lake Mills, WI 53551
920-988-9835

SAFETY MEASURES TO PREVENT ACCIDENTS

- Operate your snowmobile at safe, reasonable speeds.
- Keep your snowmobile in topnotch mechanical condition.
- Do not operate on highways except as authorized.
- Signal your intentions and watch for other snowmobilers.
- Wear sensible protective clothing including helmet and eye protection.

When snowmobiling please...

- Respect private property and no trespassing signs.
- Obey all snowmobile laws and all trail signs.
- Remember - 10 mph speed limit near buildings 15 mph near people.
- Be safe, never travel alone.
- Use common sense.
- Protect and let live small trees, shrubbery, etc.
- Use caution when crossing roadways, railroads, bridges and when on road right-of-ways. Stay away from thin ice and open water (check locally).
- Don't litter.

NOTICE!!
STAY ON TRAILS!
$100.00 REWARD
FOR INFORMATION LEADING TO THE ARREST AND CONVICTION OF ANYONE DOING PROPERTY DAMAGE ON THESE TRAILS - INCLUDING DESTRUCTION OF SIGNS, ETC.

Jefferson County Snowmobile Alliance

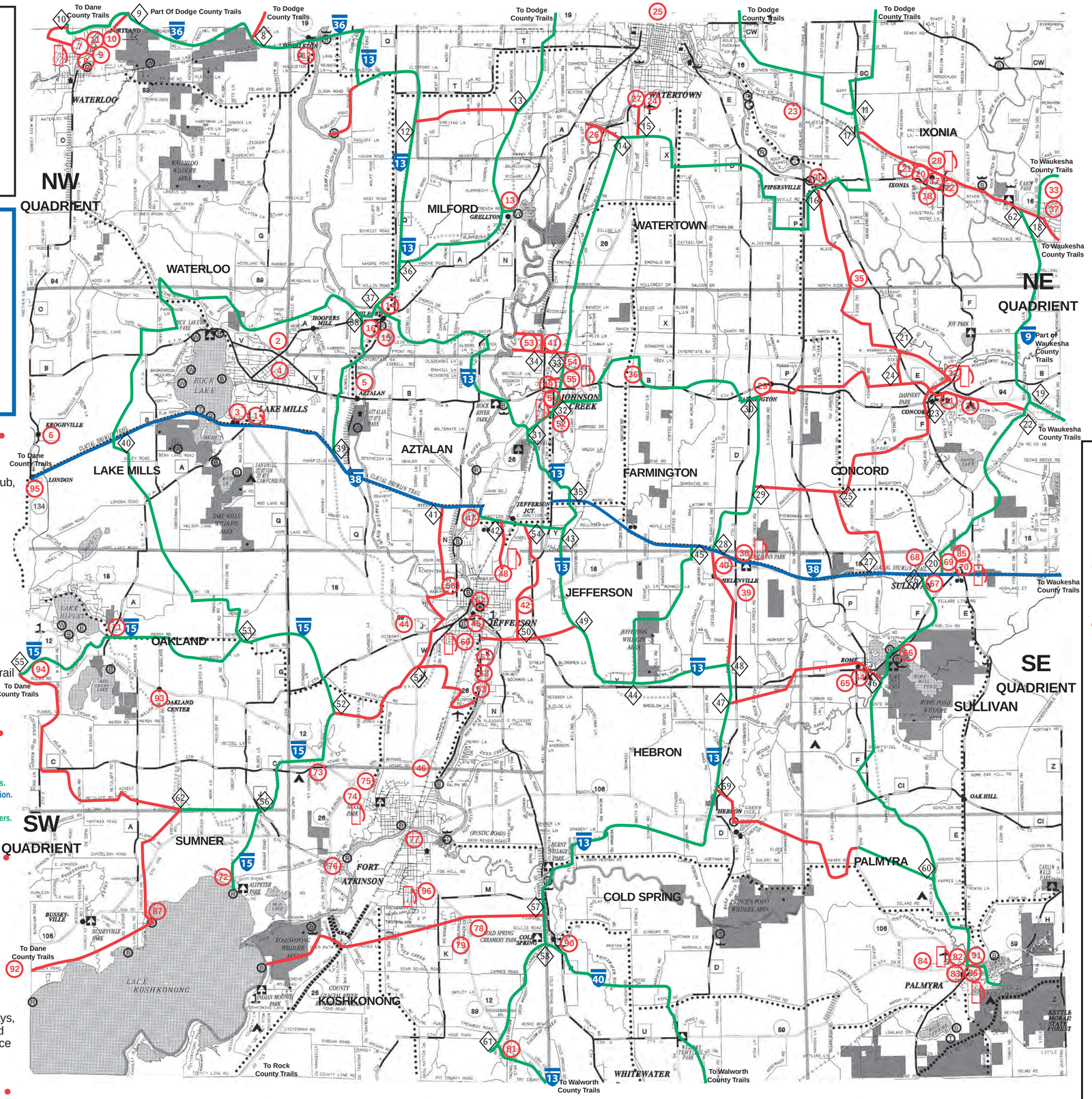

ARE THE TRAILS OPEN?
CALL 1-920-699-SNOW (7669)

GAS STATIONS

28. Cruisin' 16 — Ixonia
32. Concord General Store — Oconomowoc
38. Meyers Market — Helenville
48. Frontier FS — Jefferson
51. Everest Petro — Johnson Creek
55. Kwik Trip — Johnson Creek
60. Main Street Station — Jefferson
70. Gaugert's Mobil Mart — Sullivan
74. Kwik Trip — Fort Atkinson
82. Palmyra Citgo — Palmyra
86. Maneg's Lakeside — Palmyra
96. Southside Shell — Fort Atkinson

TRAIL CONTACTS

Concord Center Cruisers
Dane Hartwig
920-988-1853

Cooney Riders
Cory Schellinger
262-719-1231

Driftskippers Snowmobile Club of Fort Atkinson
Bill Morois
920-723-5856

Hebron Bark River Riders
John Wagi
920-563-8068

Helenville Hill Hoppers
Greg Keller
262-593-2247

Hubbleton Riders
Jeff Ziebell
920-988-7786

Ixonia Concord Explorers
John Braatz
920-261-4333

Jefferson Sno-Hawks
Glenn Fleming
920-674-6139

Jefferson Snowstormers
Tammy Chwala
920-988-7673

Johnson Creek Riders
Art Ninmann
920-699-2851

Palmyra Ridge Riders
Tim Aukofer
262-495-8753

Rome Sno-Barons
Dick Dickow
262-593-2366

Silver Creek Riders
Mark Kube
920-262-0741

Sullivan Sno-Drifters
John Lawson
262-593-8065

Twin River Riders
Dale Smith
920-648-2192

Waterloo Trail Twisters
Chad Byers-Krantz
608-695-0745

Watertown Snowmobile Assoc.
Al Uttech
920-261-5298

Whitewater Sno Seekers
Brad Schoenmann
608-883-2336

ATTENTION

Please do not contact the Jefferson County Sheriff Department regarding snowmobile trail conditions.

HOTLINE - 24 HOURS

HOTLINE NUMBERS:
Jefferson Co. 920-699-7669
Dane Co. 608-242-4576
Dodge Co. 920-386-3705
Rock Co. 608-757-5458
Walworth Co. 262-742-2664
Waukesha Co. 414-299-0330

This map is available to you by our advertisers as listed. When you are in a business that sponsored an ad, tell them you appreciate their support.

TRAIL CONDITIONS HOTLINE - 24 HRS.

Trails shown on map may vary in exact location due to various conditions. Be aware of trail markers and trail signs. Please follow trail markings at all times. Destroying or tampering with trail markings is against the law! There is a $200 fine for this.

Printed by Badger Press, Inc.
Fort Atkinson, WI

JEFFERSON COUNTY

2009-2011

$1.00 Donation

UNITED WE TRAIL DIVIDED WE FAIL
Association of WISCONSIN SNOWMOBILE CLUBS

PLACE STAMP HERE

Appendix H Traffic Operations Data

1. Travel Time Technical Memorandum
2. Truck Origins Study
3. Traffic Data and Forecasts

TranSmart Technologies, Inc.
2802 Coho Street
Suite 102
Madison, WI 53713
Phone: 608.273.4740
Fax: 608.273.4783

US 12 Corridor Study
Travel Time Measurement

A total of twelve travel time measurements of the US 12 study corridor between County N and WIS 26 were undertaken over three days: Tuesday, March 15 through Thursday, March 17, 2011. Six travel time measurement runs were made in each direction, eastbound and westbound. In each direction, three runs were made in the morning peak hour and three in the afternoon peak hour, or one run in each direction on each day. Times were recorded using a GPS device as the vehicle passed specific locations on the corridor. See the attached sheet for travel time measurement data.

Travel times along the corridor in each direction were very consistent, averaging 21 minutes 36 seconds, whether traveling eastbound or westbound. The tables below show the travel times by segment for each travel direction, along with total times and averages. Travel times for the entire corridor differed slightly only by time of day. For eastbound travel of the corridor, afternoon peak-hour travel times averaged 32 seconds faster than morning travel times. For westbound travel, the reverse was true: morning peak-hour travel times averaged 19 seconds faster than afternoon travel times.

Traffic was free flow during all travel runs. During morning westbound and afternoon eastbound travel runs, shorter travel times were due to slightly higher travel speeds. Queuing was not a factor in any of the travel time runs.

Eastbound average travel times (mm:ss) for US 12 study corridor

	CTH N to WIS 73S	WIS 73S to US 18	US 18 to Park Rd	Park Rd to CTH J	CTH J to WIS 26	Entire corridor
AM Avg	06:58	03:11	02:28	05:53	03:16	21:45
PM Avg	07:05	02:58	02:22	05:42	03:19	21:26
Average	07:01	03:04	02:25	05:47	03:18	21:36

Westbound average travel times (mm:ss) for US 12 study corridor

	WIS 26 to CTH J	CTH J to Park Rd	Park Rd to US 18	US 18 to WIS 73S	WIS 73S to CTH N	Entire corridor
AM Avg	03:12	05:41	02:30	02:56	07:01	21:20
PM Avg	03:18	05:47	02:27	02:59	07:21	21:52
Average	03:15	05:44	02:29	02:58	07:11	21:36

Time Measurements for Travel on US 12 between County N and WIS 26, AM and PM Peak Hours

EASTBOUND

	Actual Time Crossed						Travel Time Duration					
Date	County N	WIS 73 S	US 18	Park Rd	County J	WIS 26	N to 73 S	73 S to 18	18 to Park	Park to J	J to 26	Total
Tuesday, March 15, 2011	6:59:11	7:06:22	7:09:21	7:11:46	7:17:40	7:20:56	0:07:11	0:02:59	0:02:25	0:05:54	0:03:16	0:21:45
Tuesday, March 15, 2011	16:01:36	16:08:43	16:11:41	16:13:54	16:19:32	16:22:49	0:07:07	0:02:58	0:02:13	0:05:38	0:03:17	0:21:13
Wednesday, March 16, 2011	6:55:26	7:02:11	7:05:39	7:07:54	7:13:44	7:17:00	0:06:45	0:03:28	0:02:15	0:05:50	0:03:16	0:21:34
Wednesday, March 16, 2011	16:14:57	16:21:58	16:24:57	16:27:28	16:33:13	16:36:40	0:07:01	0:02:59	0:02:31	0:05:45	0:03:27	0:21:43
Thursday, March 17, 2011	7:04:20	7:11:17	7:14:22	7:17:05	7:23:00	7:26:17	0:06:57	0:03:05	0:02:43	0:05:55	0:03:17	0:21:57
Thursday, March 17, 2011	16:28:43	16:35:50	16:38:47	16:41:09	16:46:52	16:50:05	0:07:07	0:02:57	0:02:22	0:05:43	0:03:13	0:21:22
						EB Avg	0:07:01	0:03:04	0:02:25	0:05:47	0:03:18	0:21:36
						AM Avg	0:06:58	0:03:11	0:02:28	0:05:53	0:03:16	0:21:45
						PM Avg	0:07:05	0:02:58	0:02:22	0:05:42	0:03:19	0:21:26

WESTBOUND

	Actual Time Crossed						Travel Time Duration					
Date	WIS 26	County J	Park Rd	US 18	WIS 73 S	County N	26 to J	J to Park	Park to 18	18 to 73 S	73 S to N	Total
Tuesday, March 15, 2011	7:22:40	7:25:53	7:31:32	7:33:59	7:36:54	7:44:09	0:03:13	0:05:39	0:02:27	0:02:55	0:07:15	0:21:29
Tuesday, March 15, 2011	16:23:51	16:27:07	16:32:48	16:35:10	16:37:54	16:45:08	0:03:16	0:05:41	0:02:22	0:02:44	0:07:14	0:21:17
Wednesday, March 16, 2011	7:18:21	7:21:39	7:27:25	7:29:50	7:32:51	7:39:51	0:03:18	0:05:46	0:02:25	0:03:01	0:07:00	0:21:30
Wednesday, March 16, 2011	16:38:20	16:41:34	16:47:20	16:49:40	16:52:50	17:00:11	0:03:14	0:05:46	0:02:20	0:03:10	0:07:21	0:21:51
Thursday, March 17, 2011	7:30:32	7:33:36	7:39:14	7:41:52	7:44:45	7:51:32	0:03:04	0:05:38	0:02:38	0:02:53	0:06:47	0:21:00
Thursday, March 17, 2011	16:51:08	16:54:32	17:00:26	17:03:06	17:06:08	17:13:35	0:03:24	0:05:54	0:02:40	0:03:02	0:07:27	0:22:27
						WB Avg	0:03:15	0:05:44	0:02:29	0:02:58	0:07:11	0:21:36
						AM Avg	0:03:12	0:05:41	0:02:30	0:02:56	0:07:01	0:21:20
						PM Avg	0:03:18	0:05:47	0:02:27	0:02:59	0:07:21	0:21:52
						EB & WB Avg	0:03:16	0:05:46	0:02:27	0:03:01	0:07:06	0:21:36

Truck Origin Study

US 12 Safety and Operations Analyses, Corridor and Access Management Study

Project ID 3080-00-09
(County N to WIS 26, Dane and Jefferson Counties)

Prepared for
The Wisconsin Department of Transportation
Southwest Region

TranSmart

Table of Contents

Introduction 1
Methodology 1
Findings 3
Directional Movement of Trucks and Comparison with Previous Count 3
Truck Traffic through Cambridge 3
Truck Origins 4
Attachments 8

Tables

1 Comparison of truck count data 3
2 Origins of trucks with identifiable home locations and distance from US 12/18 intersection 4
3 Frequency of truck company recordings during study count 5

Figures

1 US 12/18 intersection truck turning movement percentages (percent of all truck movements) 3

Exhibits

1 US 12/18 intersection 2
2 Regional distribution of truck origins 6
3 Truck origins throughout Midwest states 7

Introduction

The US 12 Corridor Truck Origin Study was undertaken to estimate the distribution of truck origins on the US 12 study corridor between County N and WIS 26. Trucks make up a large portion of all traffic in the US 12 corridor and thus their presence has ramifications for highway safety and function, in addition to the economic vitality of US 12 corridor communities. Based on tube count data collected in summer 2011, trucks were estimated to make up nine percent of all vehicles on the study corridor west of WIS 73, ten percent between WIS 73 and the US 18 intersection (in Cambridge), eleven percent between US 18 and County J, and twelve percent east of County J. The results of the study illustrate the importance of US 12 as an economic asset of local, regional and statewide importance.

Methodology

Trucks were recorded at the intersection of US 12 and US 18 in Cambridge, Wisconsin, over two three-hour periods (6 to 9 a.m. and 3 to 6 p.m.) on Tuesday, May 10, 2011, using two video cameras (see exhibit 1 for an aerial illustration of the recording sites at the intersection). For the purposes of this study, several types of heavy vehicles are defined as trucks, to include: delivery vans, passenger buses, straight trucks, dump trucks, tractor-trailers (or semi trucks), and farm equipment. A heavy vehicle type guide, used to categorize trucks for this study, can be found in Attachment 1 at the end of this document. A total of 383 trucks (which included eight delivery vans, 25 busses, nine farm vehicles, 39 dump trucks, 125 small freight trucks, and 177 semi trucks) were logged over the recording period.

The origins of trucks were determined from data obtained from reading the sides of the truck cabs and later using online search engines to identify the trucks' home zip codes. Of the original 383 trucks recorded, only 312 of them could be further identified with a company name and/or home location. Trucks owned by companies with multiple locations were assumed to be based at the location closest to the US 12/18 intersection; these companies are denoted with asterisks on the Identified Companies data sheets provided in Attachment 2.

GIS was then used to map the distribution of truck zip codes and determine the percentages of trucks whose origins were located within each zip code. The distances from the centers of each zip code from the US 12/18 intersection were then measured. Local traffic was defined as having a company origin zip code within 20 miles of the intersection.

Exhibit 1

US 12 / 18 Intersection
Cambridge, WI

US 12 Corridor Study

Scale
1:1,200

TranSmart

Findings

The count provided data on truck movement directions and volumes, and showed how much truck traffic is passing through Cambridge on Main Street during peak weekday hours. Data used to present the findings in the following sections can be found in the Attachments at the end of this report. Attachment 2 shows the companies that were identified by the count recordings and the frequency that these companies' trucks were counted. Attachment 3 provides basic count and directional data. Attachment 4 provides the frequency with which truck origin zip codes were identified with trucks counted.

Directional Movement of Trucks and Comparison with Previous Count

The movement of trucks in the US 12 corridor was very nearly balanced: of the 383 trucks recorded at the intersection of US 12 and US 18, 50.4 percent were headed eastbound and 49.6 were moving westbound. This is consistent with the findings of a turning movement count conducted on May 17, 2011 at the same intersection. The shares of all trucks that were semi trucks (tractor-trailers) are also consistent over the two counts. The results of the two counts are compared in table 1 below.

Table 1 Comparison of truck count data

Count Date	Trucks Counted	Eastbound Share (%)	Westbound Share (%)	Semi Truck Share (%)
5/10/2011	383	50.4	49.6	46.2
5/17/2011	423	51.1	48.9	44.0

Truck Traffic through Cambridge

The amount of semi-truck traffic on Main Street in Cambridge is a concern of local residents. Truck turning movements were recorded to determine the amount and directions of truck travel at the US 12/18 intersection. Figure 1 below shows the truck turning movement percentages over the two count periods; additional data for the turning movements can be found in Attachment 3. A majority of trucks (224 of 383, or 58.5 percent) remained on US 12 as they passed through the intersection traveling eastbound and westbound; 76 (19.8 percent) turned left from eastbound US 12 to eastbound US 18; 66 (17.2 percent) were westbound US 18 vehicles turning right onto westbound US 12/18; five (or 1.3 percent) were westbound US 12 trucks turning right onto eastbound US 18; and 12 (3.1 percent) were westbound US 18 trucks turning left to eastbound US 12.

Figure 1 US 12/18 intersection truck turning movement percentages (percent of all truck movements)

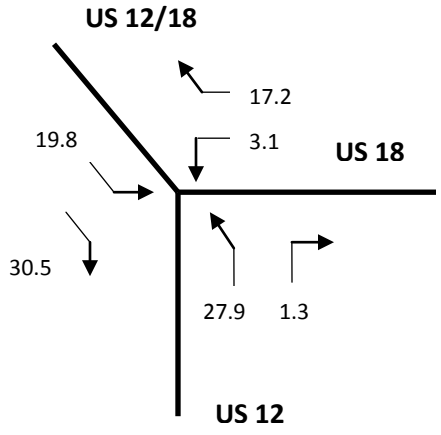

In the morning peak period (6 to 9 a.m.), 177 total trucks were counted traveling on US 12/Main Street into or out of Cambridge. Of these, 71 (40.1%) were semi-trucks, with 40 traveling eastbound and 31 traveling westbound. In the afternoon (3 to 6 p.m.), 147 trucks were counted. Of these, 44 (29.9%) were semi-trucks, with 21 headed eastbound and 23 traveling westbound.

Truck Origins

Of the 383 trucks which were counted passing through the US 12/18 intersection, origins for 312 could be determined from vehicle identification and company home address zip codes. Although only 11.4 percent of trucks were based within five miles of the intersection, a slight majority (50.6%) of the trucks were based within 20 miles (roughly the Madison-Fort Atkinson region). About 80 percent of all trucks were based in Wisconsin and 20 percent were based outside the state (in ten U.S. states and Manitoba, Canada). Table 2 below details the distances of the origins of trucks from the US 12/18 intersection. Data on the frequency of recorded truck origin zip codes can be found in Attachment 4.

Table 2 Origins of trucks with identifiable home locations and distance from US 12/18 intersection

Origin	Count	Percent
Within 5 miles	37	11.4
Within 10 miles	66	21.2
Within 20 miles	158	50.6
More than 20 miles	154	49.4
Within Wisconsin	251	80.4
Non-Wisconsin U.S.	59	18.9
Canada	2	0.6

As can be seen in exhibit 2 (which shows the shares of truck origins in regional zip codes) on the next page, truck origins are heavily concentrated along and near the US 12 corridor from Cottage Grove, through Deerfield and Cambridge, to Fort Atkinson. Communities in and around Jefferson and along US 18 are also heavily represented. Zip codes in north Madison west of I-39/90 and south Madison and Fitchburg along the Beltline (US 12/14/18/151) also show high concentrations (3 to 7 percent) of all truck origins. Zip codes in and around DeForest, Stoughton, and Whitewater also show strong concentrations (1 to 3 percent) of truck origins.

Several companies operated more than three trucks identified in this study. Table 3 on the next page lists the most commonly recorded companies. The single-most commonly identified company was First Student, Inc., which had 20 buses recorded. First Student is a privately-owned bus company serving local school districts; it is based on State Farm Road just north of US 12/18 in the town of Deerfield. Other companies that were recorded during the count include Landmark Services Cooperative of Cottage Grove with 11 trucks, United Co-op of Deerfield with seven trucks, Ageless Concrete of Madison with six trucks, and Dodge Concrete of Jefferson with five trucks.

Table 3 Frequency of truck company recordings during study count

Company	Origin	Recordings
First Student, Inc.	Deerfield	20
Landmark Services Cooperative	Cottage Grove	11
United Co-op	Deerfield	7
Ageless Concrete	Madison	6
Dodge Concrete	Jefferson	5
Federal Express	Madison	4
Miller-Bradford & Risberg, Inc.	Sussex, WI	4
Morath Trucking	Baraboo	4

Exhibit 3 shows a map of truck origin zip codes for the Midwest states. It is clear from this map that trucks from the Madison-Fort Atkinson region make up a sizable portion of origins for trucks traveling on US 12. However, it is also clear that a large number of trucks are based beyond the region, in other parts of Wisconsin and other states in the Midwest, such as Illinois, Iowa, Minnesota and Michigan.

Exhibit 2

Regional Distribution of Truck Origins

US 12 Corridor Study

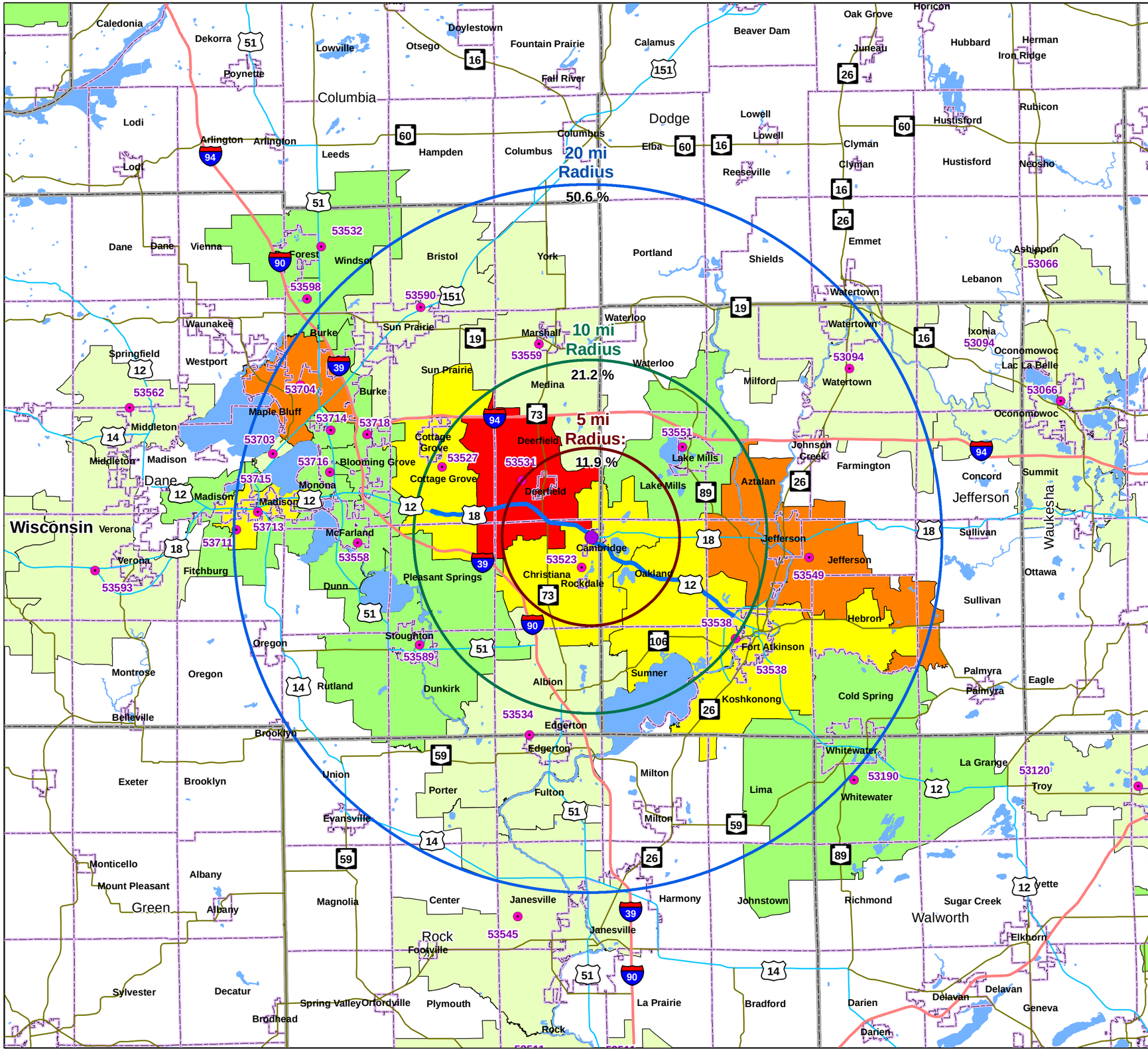

Legend

- US 12 Zip Code Centroids
- Data Collection Site

Zip Codes Identified

Percent of All Trucks

- 0.308 - 1.000
- 1.001 - 3.000
- 3.001 - 5.000
- 5.001 - 7.000
- >7.000
- Corridor Centerline
- Interstate Highways
- US Highways
- State Highways
- Municipal Boundaries
- County Boundaries
- State Boundaries
- Surface Water

0 2.5 5 10 Miles

Distance From Data Collection Point	Count	Percent
Within 5 mi (Brown Circle)	37	11.9
Within 10 mi (Green Circle)	29	21.2
Within 20 mi (Blue Circle)	92	50.6
In State Origins	251	80.4
Out of State Origins	61	19.6

Scale 1:360,000

TranSmart

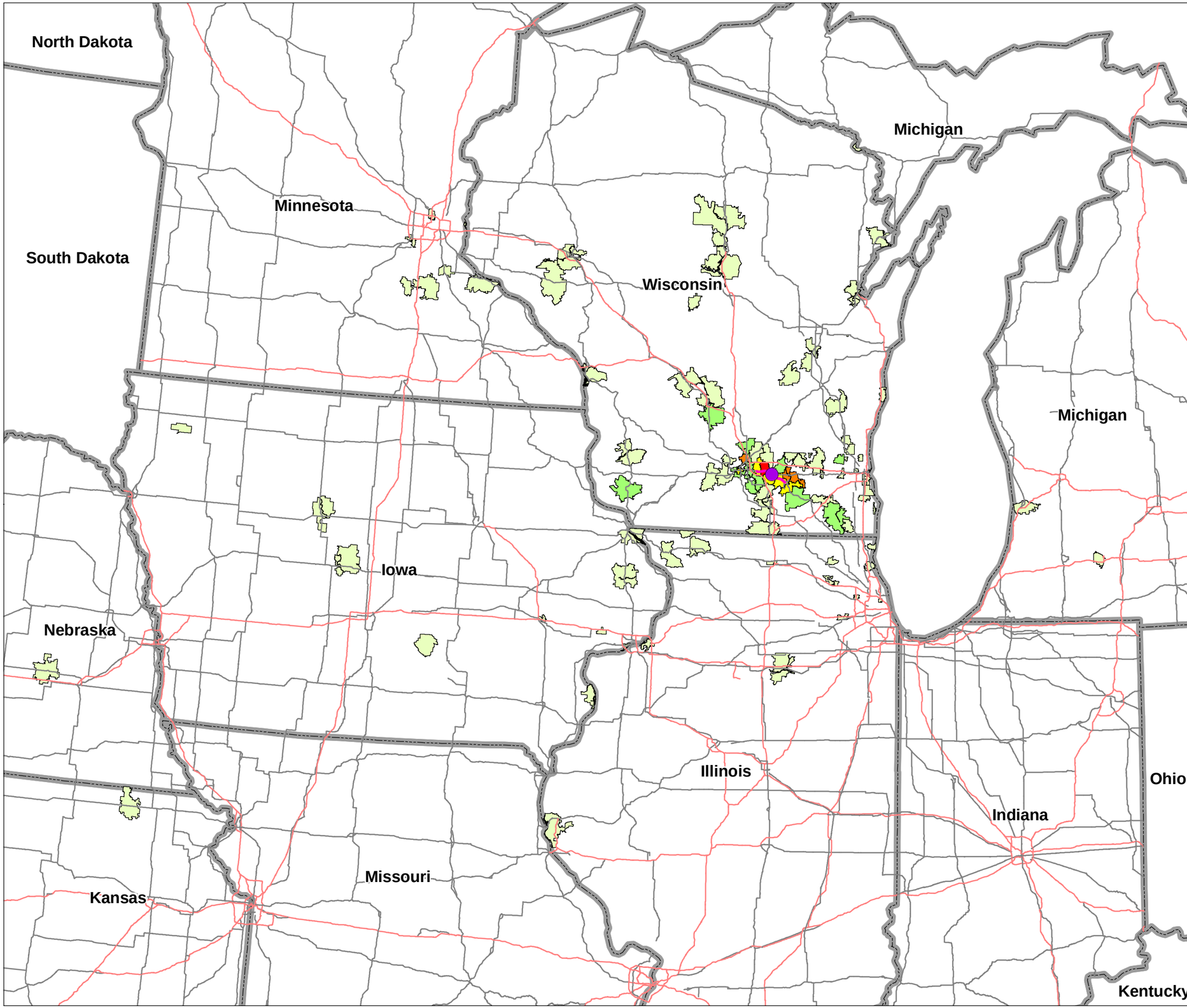

Legend

- Data Collection Site

Zip Codes Identified

Percent of All Trucks

- 0.308 - 1.000
- 1.001 - 3.000
- 3.001 - 5.000
- 5.001 - 7.000
- >7.000
- Corridor Centerline
- Interstate
- US Highway
- State Boundaries

0 25 50 100 Miles

Exhibit 3

Truck Origins Throughout Nearby Midwest States

US 12 Corridor Study

Scale 1:3,600,000

TranSmart

Attachments

Attachment 1

Heavy Vehicle Type Guide

Type	Profile	Description	Characteristics	Notes
V		Delivery Van	Two axles with dual rear wheels.	Includes UPS and FedEx delivery vehicles, bread trucks, etc.
B		Bus	Two or three axles.	Any type of passenger bus seating 15 or more.
T		Straight Truck	Two or more axles.	Long straight trucks.
D		Dump Trucks	Two or more axles.	Includes dump trucks and concrete mixers
S		Tractor-Trailer	Four to six axles.	Typical semis.
F		Farm Equipment		

Attachment 2
Identified Companies

Company Name	Municipality	State	ZIP	Distance (mi)	Count
Accurate Housing Systems Inc	EAST TROY	WI	53120	> 20	1
Ag Plus Logistics Inc (Trucking Company)	BURLINGTON	WI	53105	> 20	1
Ageless Concrete LLC	MADISON	WI	53704	10 to 20	6
AIT Worldwide Logistics Inc*	ITASCA	IL	60143	> 20	1
All Seasons Trucking	DUBUQUE	IA	52003	> 20	1
Allegiant Oil, LLC	LANCASTER	WI	53813	> 20	1
Alliance Trailer Svc*	MADISON	WI	53714	10 to 20	1
Amerhart Limited	GREEN BAY	WI	54303	> 20	1
American Express Transport	EAU CLAIRE	WI	54701	> 20	1
Andersen Logistics	BAYPORT	MN	55003	> 20	1
Arch Aluminum & Glass	WAUKESHA	WI	53186	> 20	1
ART PETERSON TRUCKING	MOSINEE	WI	54455	> 20	1
AVALON EXPRESS INC	NORTHFIELD	MN	55057	> 20	1
Bay Towel-Linen-Uniform Rental	GREEN BAY	WI	54304	> 20	1
Bestway Transfer & Storage*	MILWAUKEE	WI	53215	> 20	2
BETSINGER BLUE SKY TRUCKING LLC	LACROSSE	WI	54601	> 20	2
BISON TRANSPORT	WINNEPEG	MAN	R3H 0T8	> 20	1
BLACK HORSE CARRIERS INC*	OAK CREEK	WI	53154	> 20	1
Blackhawk Transport/Logistics	BELOIT	WI	53512	> 20	1
BOELTER Companies*	WAUKESHA	WI	53188	> 20	0
Brock Trucking Inc	VESPER	WI	54489	> 20	1
BRUNSELL LUMBER & MILLWORK*	MADISON	WI	53711	10 to 20	3
C.R. England	SALT LAKE CITY	UT	84120	> 20	1
Cargo Transport Inc*	MADISON	WI	53718	10 to 20	2
Centennial Southern Express	FALKVILLE	AL	35622	> 20	1
Central Refrigerated Svc	NAPERVILLE	IL	60563	> 20	1
CET Co	MADISON	WI	53704	10 to 20	3
Charter Communications	MADISON	WI	53718	10 to 20	1
CITY OF CAMBRIDGE	CAMBRIDGE	WI	53523	0 to 5	1
Coe Transfer Inc	BOONE	IA	50036	> 20	1
Con-Way Freight	STOUGHTON	WI	53589	10 to 20	2
COVINS	DALLAS	TX	75230	> 20	1
Crane Grain Farms	SALEM	WI	53168	> 20	2
Creative Landscapes Inc	FORT ATKINSON	WI	53523	0 to 5	2
Crete Carrier Corp	OTTAWA	IL	61350	> 20	1
Custom Transport & Hauling Inc	BENTON	IL	61028	> 20	2
D & D Trucking*	DURANT	IA	52747	> 20	2
Dodge Concrete Inc*	JEFFERSON	WI	53549	10 to 20	4
DOUGLAS NELSON TRUCKING	CAMBRIDGE	WI	53523	0 to 5	1
Eckmayer Sewer Svc*	SUN PRAIRIE	WI	53590	10 to 20	2
Eilen & Sons Trucking	HAMPTON	MN	55031	> 20	2
Fabco Equipment Inc	MADISON	WI	53713	10 to 20	1
FAIRVIEW EXPRESS INC	SENICA	KS	66538	> 20	1
FEDEX	MADISON	WI	53704	10 to 20	3
Ferguson Enterprises Inc*	MCFARLAND	WI	53558	10 to 20	1
First Student Inc	DEERFIELD	WI	53531	0 to 5	16
Foremost Farms USA	BARABOO	WI	53913	> 20	1
Fort Transportation & Svc Co (FORTRANS)	FORT ATKINSON	WI	53538	5 to 10	2
Foust Foundation Inc	FORT ATKINSON	WI	53538	5 to 10	1
FREIGHT FIRST CORP*	GERMANTOWN	WI	53022	> 20	1
FREY TRUCKING	FORT ATKINSON	WI	53538	5 to 10	1
Frontier FS	JEFFERSON	WI	53549	10 to 20	1
GORDON FLESCH COMPANY, INC*	MADISON	WI	53711	10 to 20	1
Great Lakes Roofing Corp	MCFARLAND	WI	53558	10 to 20	3
Gully Transportation Inc	QUINCY	IL	62305	> 20	1

Company Name	Municipality	State	ZIP	Distance (mi)	Count
Heartland Express	CORALVILLE	IA	52241	> 20	1
Highway Landscapers Inc	JEFFERSON	WI	53549	10 to 20	3
Holiday Wholesale	WISCONSIN DELLS	WI	53965	> 20	1
Hospira Inc*	LAKE FOREST	IL	60045	> 20	1
Hribar Trucking, Inc	CALIDONIA	WI	53108	> 20	1
Hydrite Chemical Co	COTTAGE GROVE	WI	53527	5 to 10	1
Ideal Crane Rental Trnsprtn	MADISON	WI	53704	10 to 20	1
Interlibrary Loan & Sharing*	MADISON	WI	53716	10 to 20	1
Jahn Transfer Inc	LACROSSE	WI	54603	> 20	1
Joe Daniels Construction Company	MADISON	WI	53713	10 to 20	1
Keystone Automotive - Madison*	DEFOREST	WI	53532	> 20	2
Klemm Tank Lines*	GREEN BAY	WI	54313	> 20	1
Lake Mills Nursery	LAKE MILLS	WI	53551	5 to 10	1
Lakeside Lutheran High School	LAKE MILLS	WI	53551	5 to 10	2
Landmark SERVICES COOPERATIVE	COTTAGE GROVE	WI	53527	5 to 10	10
Lawrence National Lease*	RED WING	MN	55066	> 20	1
Lazers Bus Service, Inc	MARSHALL	WI	53559	10 to 20	1
Loeb-Lorman Metals In	FORT ATKINSON	WI	53538	5 to 10	1
Lowell C Hagen Trucking Inc	WHITEWATER	WI	53190	> 20	1
LYCON, INC	JANESVILLE	WI	53545	> 20	2
MAPLETON DAIRY HAULERS, INC	OCONOMOWOC	WI	53066	> 20	1
Marathon Mail Service, Inc	WAUSAU	WI	54401	> 20	2
Marten Transport Ltd	MONDOVI	WI	54755	> 20	2
Maverick Express, Inc.	BATTLE CREEK	MI	49015	> 20	1
Mc Nay Truck Lines	QUINCY	IL	62301	> 20	3
Midwest Construction Materials	STOUGHTON	WI	53589	10 to 20	1
MIDWEST TRANSFER & LOGISTICS, LLC	EAST DUNDEE	IL	60118	> 20	2
MILLER COMPRESSING CO*	MILWAUKEE	WI	53204	> 20	1
Miller-Bradford & Risberg Inc	SUSSEX	WI	53089	> 20	4
Monona Plumbing & Fire Protection Inc	MADISON	WI	53713	10 to 20	3
Morath Trucking Inc	BARABOO	WI	53913	> 20	4
NESVIG	WINDSOR	WI	53598	> 20	1
Oakhouse Farm Bakery	MADISON	WI	53718	10 to 20	1
Oberg Freight Company	FORT DODGE	IA	50501	> 20	2
Old Dutch Foods Inc	DEFOREST	WI	53532	> 20	1
Olson Grain	EDGERTON	WI	53534	10 to 20	1
Paul J Schmidt Trucking Inc	SUSSEX	WI	53089	> 20	1
Penske Truck Rental*	MADISON	WI	53716	10 to 20	1
PERRON TRUCKING INC	CAMBELLSPORT	WI	53010	> 20	1
PETRO TECH HAULING INC	ROCKFORD	IL	61108	> 20	1
PICKS PROFESSIONAL TRUCKING	WAUKEGAN	IL	60087	> 20	1
Pioneer Transportation, LTD	MERRILL	WI	54452	> 20	1
PRESIDENTIAL LIMO SERVICE	CAMBRIDGE	WI	53523	0 to 5	1
Pulvermacher Cartage of Wis	MADISON	WI	53704	10 to 20	3
R & L Carriers Inc*	GERMANTOWN	WI	53022	> 20	1
R G SUTTER TRUCKING & EXCAVATING	MOUNT HOREB	WI	53572	> 20	1
RENZ TRUCKING	JEFFERSON	WI	53549	10 to 20	2
RICHARD WOLF TRUCKING INC	CAMBRIDGE	WI	53523	0 to 5	2
Richardson Trucking	BOSCOBELLE	WI	53805	> 20	1
ROCK RIVER CONCRETE INC	EDGERTON	WI	53534	10 to 20	1
ROYAL CONTAINER SERVICE	MONONA	WI	53716	10 to 20	2
RSC EQUIPMENT RENTAL, MADISON, WI	MADISON	WI	53718	10 to 20	1
RT&T ENTERPRISES	EAST DUBUQUE	IL	61025	> 20	1
Ryder	MADISON	WI	53714	10 to 20	3
Sanimax	DEFOREST	WI	53532	> 20	1
SCHMIDT'S AUTO INC*	MADISON	WI	53715	10 to 20	2
Schneider National Inc	FOREST JUNCTION	WI	54123	> 20	2
SDC Drywall & Insulation, Inc.	STOUGHTON	WI	53589	10 to 20	1
Sears	MADISON	WI	53704	10 to 20	1

Company Name	Municipality	State	ZIP	Distance (mi)	Count
SMART WAY CONSTRUCTION INC	CHICAGO	IL	60641	> 20	1
Spangler Seedtech Inc	JEFFERSON	WI	53549	10 to 20	1
SST Enterprises Inc	MINNEAPOLIS	MN	55438	> 20	2
STANDARD FORWARDING	EAST MOLINE	IL	61244	> 20	1
STAPLES	MONONA	WI	53716	10 to 20	1
STEVENS TRANSPORT	OSHKOSH	WI	54904	> 20	1
Supervalu Transportation, INC	EDEN PRAIRIE	MN	55344	> 20	2
Swift Transportation*	HANOVER PARK	IL	60133	> 20	1
T & T CORPORATION	MADISON	WI	53711	10 to 20	1
T & T Stone CO	CAMBRIDGE	WI	53523	0 to 5	1
Tax Air Freight*	MILWAUKEE	WI	53207	> 20	1
TC TRANSPORTATION INC	CRYSTAL LAKE	IL	60012	> 20	1
TELEPORT COMMUNICATIONS GROUP	MILWAUKEE	WI	53202	> 20	1
Temperature Systems Inc	MADISON	WI	53718	10 to 20	1
THE BRUCE COMPANY WHOLESALE*	VERONA	WI	53593	> 20	1
THE HOLLOWS INC	HOSPERS	IA	51238	> 20	1
TOM JOY & SON TRUCKING, LLC	PESHTIGO	WI	54157	> 20	1
TOWN OF OAKLAND	CAMBRIDGE	WI	53523	0 to 5	1
TransX Corporate Office	WINNEPEG	MAN	R3C 2E6	> 20	1
Tricor Transit Inc	WINDSOR	WI	53598	> 20	1
Tri-Star Mulch*	MADISON	WI	53713	10 to 20	2
Tru Green	MONONA	WI	53713	10 to 20	2
TVL TRUCKING INC	WHITEWATER	WI	53190	> 20	1
U.S. Xpress Enterprises, Inc	CHATTENOOGA	TN	37421	> 20	1
U-Haul Neighborhood Dealer*	CAMBRIDGE	WI	53523	0 to 5	1
United Co-Op*	DEERFIELD	WI	53531	0 to 5	7
UPS DISTRIBUTION CENTER*	WATERTOWN	WI	53081	10 to 20	3
US Special Delivery	KINGSFORD	MI	49802	> 20	1
USF Holland	HOLLAND	MI	49423	> 20	1
UW PROVISIONS	MIDDLETON	WI	53562	> 20	2
UW-MADISON	MADISON	WI	53715	10 to 20	2
Veolia Environmental Services*	FORT ATKINSON	WI	53538	5 to 10	3
Veteran's Truck Line Inc	BURLINGTON	WI	53105	> 20	2
Vita Plus Corp	LAKE MILLS	WI	53551	5 to 10	1
W & A Distribution Service	CAMBRIDGE	WI	53523	0 to 5	1
Walgreens Distribution Ctr	WINDSOR	WI	53598	> 20	1
Waste Management	MADISON	WI	53713	10 to 20	2
We Energies*	MADISON	WI	53703	10 to 20	2
Wenger Truck Line Inc	DAVENPORT	IA	52802	> 20	1
Werner Enterprises Inc	MAQUOKETA	IA	52060	> 20	1
West Wisconsin Transport, Inc	EAU CLAIRE	WI	54703	> 20	1
Wisconsin Building Supply	WINDSOR	WI	53598	> 20	1
WISCONSIN LOGISTICS	MILWAUKEE	WI	53223	> 20	1
WISCONSIN PLASTIC DRAIN TILE CORP	JEFFERSON	WI	53549	10 to 20	2
Z T WHOLESALE INC	MILWAUKEE	WI	53221	> 20	1

Attachment 3
Collected Data
May 10, 2011

AM & PM Totals

	Count	Percent
Total vehicles logged	383	100.0
Eastbound vehicles	193	50.4
Westbound vehicles	190	49.6

EB vehicles to US 12 east	117	30.5
EB vehicles to US 18 east	76	19.8
WB vehicles from US 12	107	27.9
WB vehicles from US 18	66	17.2
WB vehicles to US 12 east	12	3.1
WB vehicles to US 18 east	5	1.3

Van	8	2.1
Bus	25	6.5
Farm	9	2.3
Dump Truck	39	10.2
Truck	125	32.6
Semi	177	46.2

Vehicles w/ insufficient information	71	18.5
Vehicles w/ identified US zip codes	310	80.9
Vehicles w/ non-US zip codes	2	0.5
Vehicles w/ zip codes & companies	257	82.4
Vehicles w/ zip codes / no companies	55	17.6

US zip codes identified	119
Companies identified	159

Sample Size: 312 vehicles w/ Zip Codes

Distance from data collection point	Count	Percent
Within 5 miles (brown circle)	37	11.9
Within 10 miles (green circle)	29	21.2
Within 20 miles (blue circle)	92	50.6
In-state origins	251	80.4
Out-of-state origins	61	19.6

	Count	Percent
EB semis (% of total vehicles)	95	24.8
EB semis through Cambridge (Main Street)	61	64.2
EB semis to US 18	34	35.8
EB semis (more than 20 miles)	66	69.5
EB semis from Wisconsin	49	51.6

	Count	Percent
WB semis (% of total vehicles)	82	21.4
WB semis through Cambridge (Main Street)	54	63.4
WB semis from US 18	28	34.1
WB semis (more than 20 miles)	46	56.1
WB semis from Wisconsin	41	50.0

TM Count data collected 5/17/2011	Count	Percent
All peak-hour trucks	423	100.0
EB vehicles	216	51.1
WB vehicles	207	48.9
Peak-hour semis	186	44.0
EB semis	96	22.7
EB semis through Cambridge (Main Street)	57	59.4
WB semis	90	21.3
WB semis through Cambridge (Main Street)	59	65.6

Average # of semis /15 min: Truck Study	7.375
Average # of semis /15 min: TM Count	7.750

AM Data

	Count	Percent
Total vehicles logged	219	100.000
Eastbound vehicles	122	55.708
Westbound vehicles	97	44.292

EB vehicles to US 12 east	76	62.3
EB vehicles to US 18 east	46	37.7
WB vehicles from US 12	57	58.8
WB vehicles from US 18	30	30.9
WB vehicles to US 12 east	6	6.2
WB vehicles to US 18 east	4	4.1
	219	
Van	1	0.5
Bus	15	6.8
Farm	7	3.2
Dump truck	20	9.1
Truck	69	31.5
Semi-truck	107	48.9
	219	
Vehicles w/ insufficient information	42	19.2
Vehicles w/ identified US zip codes	176	80.4
Vehicles w/ non-US zip codes	1	0.5
Vehicles w/ zip codes & companies	139	78.5
Vehicles w/ zip codes / no companies	38	21.5

Sample Size: 177

Distance from data collection point	Count	Percent
Within 5 miles (brown circle)	20	11.3
Within 10 miles (green circle)	37	20.9
Within 20 miles (blue circle)	90	50.8
In-state origins	143	80.8
Out-of-state origins	34	19.2

EB semis through Cambridge (Main Street)	40	62.5
WB semis through Cambridge (Main Street)	31	72.1

Semi-truck counts in 15-minute intervals	Count	Of all traffic (%)	Of trucks (%)
6:00 to 6:15	7	6.5	63.6
6:15 to 6:30	5	4.7	45.5
6:30 to 6:45	5	4.7	35.7
6:45 to 7:00	8	7.5	44.4
7:00 to 7:15	7	6.5	33.3
7:15 to 7:30	13	12.1	56.5
7:30 to 7:45	11	10.3	47.8
7:45 to 8:00	7	6.5	35.0
8:00 to 8:15	10	9.3	55.6
8:15 to 8:30	13	12.1	86.7
8:30 to 8:45	9	8.4	45.0
8:45 to 9:00	12	11.2	48.0
Totals	107	100.0	49.8

PM Data

	Count	Percent
Total vehicles logged	164	100.0
Eastbound vehicles	71	43.3
Westbound vehicles	93	56.7

EB vehicles to US 12 east	41	25.0
EB vehicles to US 18 east	30	18.3
WB vehicles from US 12	50	30.5
WB vehicles from US 18	36	22.0
WB vehicles to US 12 east	6	3.7
WB vehicles to US 18 east	1	0.6
Van	7	4.3
Bus	10	6.1
Farm	2	1.2
Dump Truck	19	11.6
Truck	56	34.1
Semi	70	42.7
Vehicles w/ insufficient information	29	17.7
Vehicles w/ identified US zip codes	134	81.7
Vehicles w/ non-US zip codes	1	0.6
Vehicles w/ zip codes & companies	118	87.4
Vehicles w/ zip codes / no companies	17	12.6

Sample Size: 147

Distance from data collection point	Count	Percent
Within 5 miles (brown circle)	17	9.6
Within 10 miles (green circle)	29	16.4
Within 20 miles (blue circle)	71	40.1
In-state origins	108	80.0
Out-of-state origins	27	20.0

EB semis through Cambridge (Main Street)	21	67.7
WB semis through Cambridge (Main Street)	23	59.0

Semi-truck counts in 15-minute intervals	Count	Of all traffic (%)	Of trucks (%)
15:00 to 15:15	6	8.6	31.6
15:15 to 15:30	6	8.6	46.2
15:30 to 15:45	7	10.0	35.0
15:45 to 16:00	8	11.4	42.1
16:00 to 16:15	6	8.6	66.7
16:15 to 16:30	4	5.7	40.0
16:30 to 16:45	6	8.6	40.0
16:45 to 17:00	8	11.4	53.3
17:00 to 17:15	5	7.1	35.7
17:15 to 17:30	4	5.7	44.4
17:30 to 17:45	4	5.7	26.7
17:45 to 18:00	6	8.6	66.7
Totals	70	100.0	44.0

Attachment 4
Identified Zip Codes

Zip Code	Municipality	State	Count	Percent	Distance
53523	CAMBRIDGE	WI	14	4.49	0 to 5
53531	DEERFIELD	WI	23	7.37	0 to 5
53527	COTTAGE GROVE	WI	11	3.53	5 to 10
53538	FORT ATKINSON	WI	13	4.17	5 to 10
53551	LAKE MILLS	WI	5	1.60	5 to 10
53094	WATERTOWN	WI	1	0.32	10 to 20
53534	EDGERTON	WI	2	0.64	10 to 20
53549	JEFFERSON	WI	20	6.41	10 to 20
53558	MCFARLAND	WI	4	1.28	10 to 20
53559	MARSHALL	WI	1	0.32	10 to 20
53589	STOUGHTON	WI	4	1.28	10 to 20
53590	SUN PRAIRIE	WI	3	0.96	10 to 20
53703	MADISON	WI	3	0.96	10 to 20
53704	MADISON	WI	19	6.09	10 to 20
53711	MADISON	WI	5	1.60	10 to 20
53713	MADISON	WI	11	3.53	10 to 20
53714	MADISON	WI	4	1.28	10 to 20
53715	MADISON	WI	4	1.28	10 to 20
53716	MONONA	WI	5	1.60	10 to 20
53718	MADISON	WI	6	1.92	10 to 20
35622	FALKVILLE	AL	1	0.32	> 20
37421	CHATTANOOGA	TN	1	0.32	> 20
49015	BATTLE CREEK	MI	1	0.32	> 20
49423	HOLLAND	MI	1	0.32	> 20
49802	KINGSFORD	MI	1	0.32	> 20
50036	BOONE	IA	1	0.32	> 20
50219	PELLA	IA	1	0.32	> 20
50501	FORT DODGE	IA	3	0.96	> 20
51238	HOSPERS	IA	1	0.32	> 20
52003	DUBUQUE	IA	1	0.32	> 20
52060	MAQUOKETA	IA	1	0.32	> 20
52241	CORALVILLE	IA	1	0.32	> 20
52646	OAKVILLE	IA	1	0.32	> 20
52747	DURANT	IA	2	0.64	> 20
52802	DAVENPORT	IA	1	0.32	> 20
53010	CAMBELLSPORT	WI	1	0.32	> 20
53022	GERMANTOWN	WI	2	0.64	> 20
53037	JACKSON	WI	1	0.32	> 20
53046	LANNON	WI	1	0.32	> 20
53066	OCONOMOWOC	WI	1	0.32	> 20
53081	WATERTOWN	WI	3	0.96	> 20
53089	SUSSEX	WI	6	1.92	> 20
53105	BURLINGTON	WI	4	1.28	> 20
53108	CALIDONIA	WI	1	0.32	> 20
53120	EAST TROY	WI	3	0.96	> 20
53154	OAK CREEK	WI	1	0.32	> 20
53168	SALEM	WI	2	0.64	> 20
53186	WAUKESHA	WI	1	0.32	> 20
53190	WHITEWATER	WI	4	1.28	> 20
53202	MILWAUKEE	WI	1	0.32	> 20
53204	MILWAUKEE	WI	2	0.64	> 20
53207	MILWAUKEE	WI	1	0.32	> 20
53215	MILWAUKEE	WI	2	0.64	> 20
53221	MILWAUKEE	WI	1	0.32	> 20
53223	MILWAUKEE	WI	1	0.32	> 20
53226	MILWAUKEE	WI	1	0.32	> 20
53401	RACINE	WI	1	0.32	> 20
53405	RACINE	WI	1	0.32	> 20
53511	BELOIT	WI	1	0.32	> 20
53512	BELOIT	WI	1	0.32	> 20
53532	DEFOREST	WI	5	1.60	> 20
53545	JANESVILLE	WI	2	0.64	> 20
53562	MIDDLETON	WI	3	0.96	> 20
53572	MOUNT HOREB	WI	1	0.32	> 20
53593	VERONA	WI	2	0.64	> 20
53598	WINDSOR	WI	4	1.28	> 20
53805	BOSCOBELLE	WI	1	0.32	> 20
53813	LANCASTER	WI	4	1.28	> 20
53913	BARABOO	WI	5	1.60	> 20
53948	MAUSTON	WI	2	0.64	> 20
53965	WISCONSIN DELLS	WI	1	0.32	> 20
54123	FOREST JUNCTION	WI	2	0.64	> 20
54157	PESHTIGO	WI	1	0.32	> 20

Truck Origin Distribution by Distance (312 Identified Zip Codes)

Distance	Count	Percent	Cumulative Percent
0 to 5 mi	37	11.9	11.9
5 to 10 mi	29	9.3	21.2
10 to 20 mi	92	29.5	50.6
> 20 mi	154	49.4	100.0
	312	100.0	

Zip Code	Municipality	State	Count	Percent	Distance
54303	GREEN BAY	WI	1	0.32	> 20
54304	GREEN BAY	WI	1	0.32	> 20
54313	GREEN BAY	WI	1	0.32	> 20
54315	GREEN BAY	WI	1	0.32	> 20
54401	WAUSAU	WI	3	0.96	> 20
54452	MERRILL	WI	1	0.32	> 20
54455	MOSINEE	WI	1	0.32	> 20
54489	VESPER	WI	1	0.32	> 20
54601	LACROSSE	WI	2	0.64	> 20
54603	LACROSSE	WI	1	0.32	> 20
54701	EAU CLAIRE	WI	1	0.32	> 20
54703	EAU CLAIRE	WI	1	0.32	> 20
54755	MONDOVI	WI	2	0.64	> 20
54901	OSHKOSH	WI	1	0.32	> 20
54904	OSHKOSH	WI	1	0.32	> 20
54971	RIPON	WI	1	0.32	> 20
55003	BAYPORT	MN	1	0.32	> 20
55031	HAMPTON	MN	2	0.64	> 20
55046	LONSDALE	MN	1	0.32	> 20
55057	NORTHFIELD	MN	1	0.32	> 20
55066	RED WING	MN	1	0.32	> 20
55112	NEW BRIGHTON	MN	1	0.32	> 20
55344	EDEN PRAIRIE	MN	2	0.64	> 20
55438	MINNEAPOLIS	MN	2	0.64	> 20
60012	CRYSTAL LAKE	IL	1	0.32	> 20
60045	LAKE FOREST	IL	1	0.32	> 20
60087	WAUKEGAN	IL	1	0.32	> 20
60118	EAST DUNDEE	IL	2	0.64	> 20
60133	HANOVER PARK	IL	1	0.32	> 20
60143	ITASCA	IL	1	0.32	> 20
60563	NAPERVILLE	IL	1	0.32	> 20
60641	CHICAGO	IL	1	0.32	> 20
61025	EAST DUBUQUE	IL	1	0.32	> 20
61028	BENTON	IL	2	0.64	> 20
61044	KENT	IL	1	0.32	> 20
61048	LENA	IL	1	0.32	> 20
61087	WARREN	IL	1	0.32	> 20
61108	ROCKFORD	IL	1	0.32	> 20
61244	EAST MOLINE	IL	1	0.32	> 20
61350	OTTAWA	IL	1	0.32	> 20
62301	QUINCY	IL	3	0.96	> 20
62305	QUINCY	IL	1	0.32	> 20
66538	SENICA	KS	1	0.32	> 20
68434	SEWARD	NE	1	0.32	> 20
75230	DALLAS	TX	1	0.32	> 20
84120	SALT LAKE CITY	UT	1	0.32	> 20
R3C 2E6	WINNEPEG	MAN	1	0.32	> 20
R3H 0T8	WINNEPEG	MAN	1	0.32	> 20
		Totals	312	100.00	

Traffic Data and Forecasts

TRAFFIC FORECAST REPORT

PROJECT ID(S): 3080-00-09
ROUTE(S): USH 12

Region/COUNTY(IES): SW / Dane & Jefferson
LOCATION: CTH N (Dane Co) to STH 26
COMPLETED: September 20, 2011

Traffic Forecasting Section; Wisconsin DOT

Developed by: Jennifer Hill
Phone : (608) 266-3322
FAX #: (608) 267-1856
E-Mail ID:Jennifer.Hill@dot.wi.gov

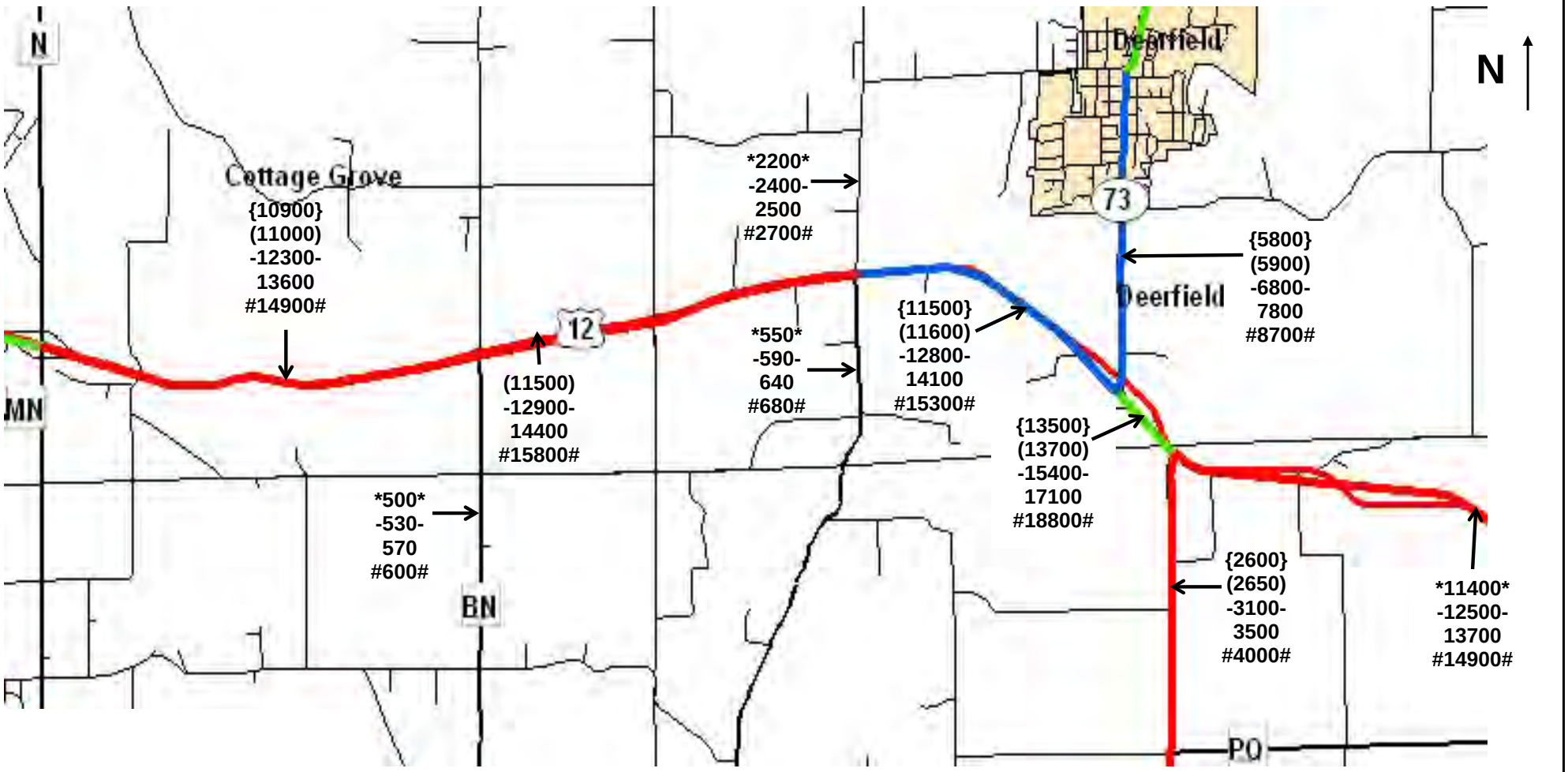

Design Values (%)			
Routes →	USH 12		
Design Volume(s):	17100	--	--
K250	9.3	--	--
K100	10.2	--	--
K30	11.2	--	--
T(DHV)	6.6	--	--
D(Dsgn. Hr.)	62/38	--	--
K8(ADT)	--	--	--
T(A8HV)	--	--	--

Truck Class %'s			
Class	Seg. 1	Seg. 2	Seg. 3
2D	2.0	--	--
3AX	1.3	--	--
2S1+2S2	1.3	--	--
3-S2	3.5	--	--
DBL-BTM	0.2	--	--
TOTAL	8.3%	--	--

Last Count/Forecast Years:

{000}	2009	AADT
(000)	2010	AADT
000	2011	AADT
-000-	2020	AADT
000	2030	AADT
#000#	2040	AADT

NOTES ON THE FORECAST:

This projection assumes that no major new traffic generators will be developed in the area served by the roadway or intersection over the course of the planning period.

BoxCox regression is used to project past count data. The Land Use Base Travel Demand Model was consulted and used as a validity check against the TAFIS output. Adjustments were made as needed.

Truck classification percentages were taken from a table representative of similar facilities and locations throughout the state of Wisconsin.

USH 12 is a factor group IV highway indicating low to moderate fluctuations in traffic from a seasonal perspective. It is considered a rural principal arterial for count purposes.

TRAFFIC FORECAST REPORT

PROJECT ID(S): 3080-00-09
ROUTE(S): USH 12

Region/COUNTY(IES): SW / Dane & Jefferson
LOCATION: CTH N (Dane Co) to STH 26
COMPLETED: September 20, 2011

Traffic Forecasting Section; Wisconsin DOT

Developed by: Jennifer Hill
Phone : (608) 266-3322
FAX #: (608) 267-1856
E-Mail ID:Jennifer.Hill@dot.wi.gov

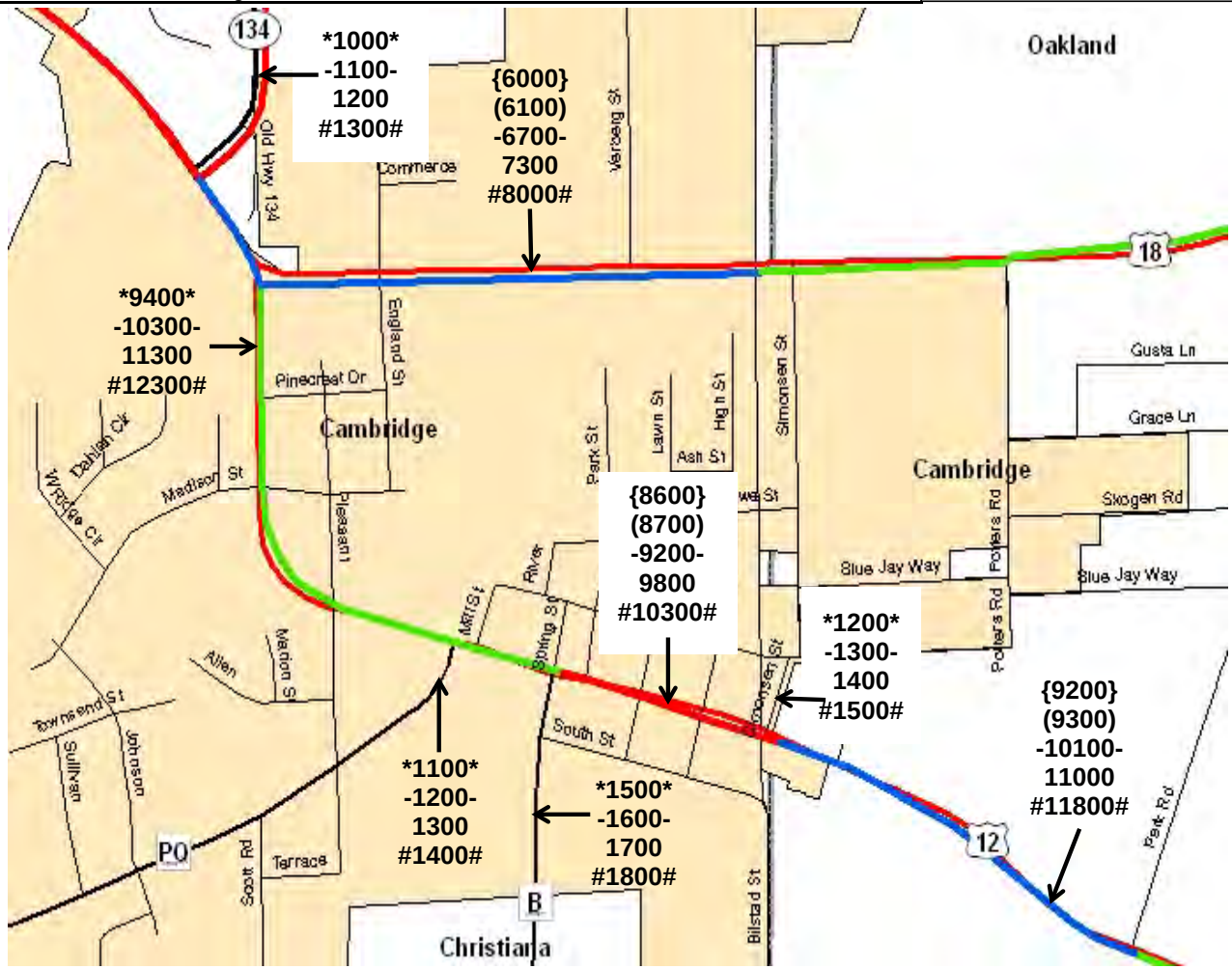

Design Values (%)			
Routes →	USH 12		
Design Volume(s):	11300	--	--
K250	9.4	--	--
K100	10.4	--	--
K30	11.4	--	--
T(DHV)	6.9	--	--
D(Dsgn. Hr.)	62/38	--	--
K8(ADT)	--	--	--
T(A8HV)	--	--	--

Truck Class %'s			
Class	Seg. 1	Seg. 2	Seg. 3
2D	2.1	--	--
3AX	1.3	--	--
2S1+2S2	1.3	--	--
3-S2	3.7	--	--
DBL-BTM	0.2	--	--
TOTAL	8.7%	--	--

Last Count/Forecast Years:

{000}	2009	AADT
(000)	2010	AADT
000	2011	AADT
-000-	2020	AADT
000	2030	AADT
#000#	2040	AADT

NOTES ON THE FORECAST:

This projection assumes that no major new traffic generators will be developed in the area served by the roadway or intersection over the course of the planning period.

BoxCox regression is used to project past count data. The Land Use Base Travel Demand Model was consulted and used as a validity check against the TAFIS output. Adjustments were made as needed.

Truck classification percentages were taken from a table representative of similar facilities and locations throughout the state of Wisconsin.

USH 12 is a factor group IV highway indicating low to moderate fluctuations in traffic from a seasonal perspective. It is considered a rural principal arterial for count purposes.

TRAFFIC FORECAST REPORT

PROJECT ID(S): 3080-00-09
ROUTE(S): USH 12

Region/COUNTY(IES): SW / Dane & Jefferson
LOCATION: CTH N (Dane Co) to STH 26
COMPLETED: September 20, 2011

Traffic Forecasting Section; Wisconsin DOT

Developed by: Jennifer Hill
Phone : (608) 266-3322
FAX #: (608) 267-1856
E-Mail ID:Jennifer.Hill@dot.wi.gov

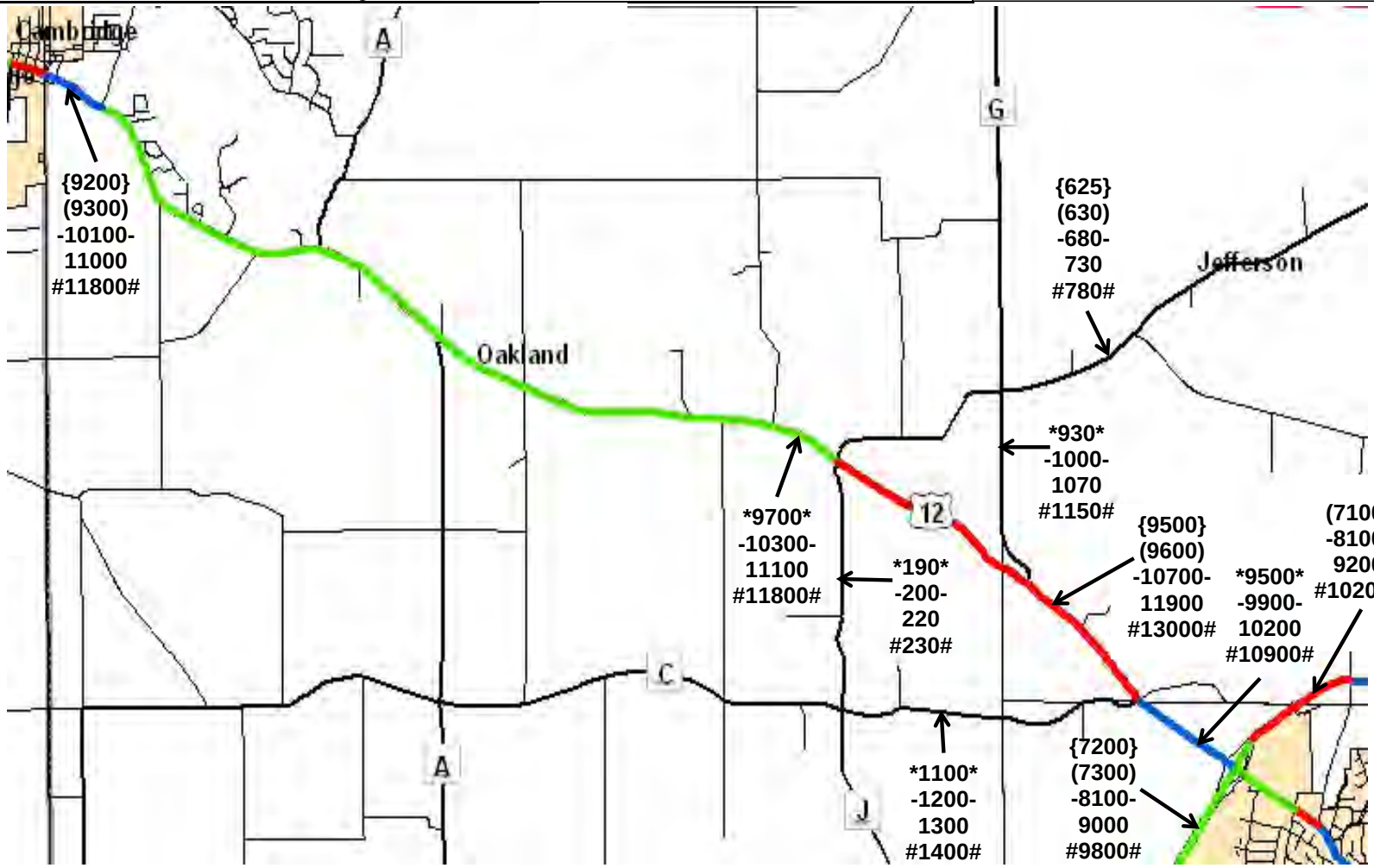

Design Values (%)			
Routes →	USH 12		
Design Volume(s):	11900	--	--
K250	9.4	--	--
K100	10.4	--	--
K30	11.4	--	--
T(DHV)	6.9	--	--
D(Dsgn. Hr.)	62/38	--	--
K8(ADT)	--	--	--
T(A8HV)	--	--	--

Truck Class %'s			
Class	Seg. 1	Seg. 2	Seg. 3
2D	2.1	--	--
3AX	1.3	--	--
2S1+2S2	1.3	--	--
3-S2	3.7	--	--
DBL-BTM	0.2	--	--
TOTAL	8.6%	--	--

Last Count/Forecast Years:

{000}	2009	AADT
(000)	2010	AADT
000	2011	AADT
-000-	2020	AADT
000	2030	AADT
#000#	2040	AADT

NOTES ON THE FORECAST:

This projection assumes that no major new traffic generators will be developed in the area served by the roadway or intersection over the course of the planning period.

The historical traffic count trends will continue increasing at a decreasing rate. BoxCox regression is used to project past count data.

Truck classification percentages were taken from a table representative of similar facilities and locations throughout the state of Wisconsin.

USH 12 is a factor group IV highway indicating low to moderate fluctuations in traffic from a seasonal perspective. It is considered a rural principal arterial for count purposes.

Projected AM Design Hour Traffic Volumes

WisDot Bureau of Planning
Traffic Forecasting Section
Forecast by: Jennifer Hill
Phone: 608-266-3322
Email: Jennifer.Hill@dot.wi.gov

Design Hour: 7:00 - 8:00

Forecast Completed: October 6, 2011

Project Description

Project ID: 3080-00-09
Location: CTH N (Dane) to STH 26 (Jefferson)
Route: USH 12
Region/County: SW / Dane & Jefferson

Design Hour Turning Movement Data

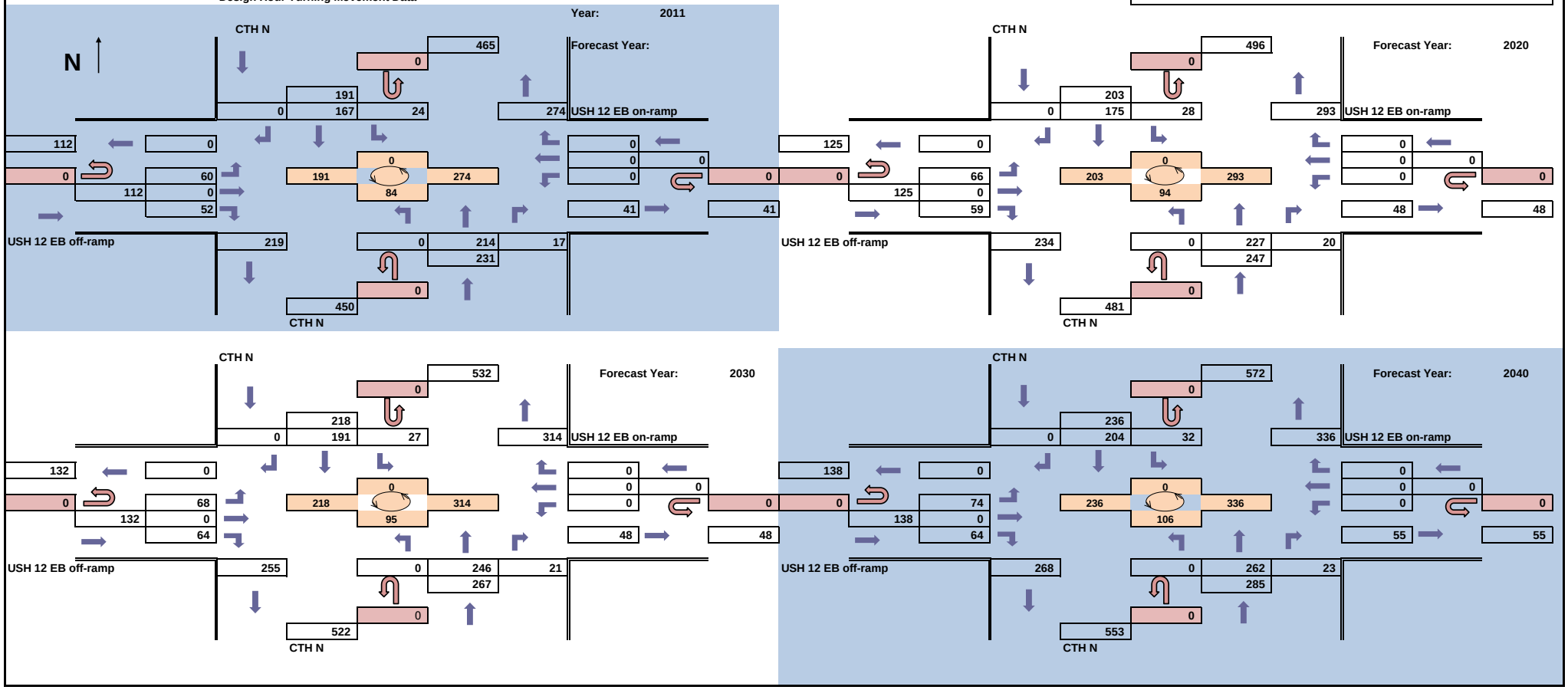

WisDot Bureau of Planning

Traffic Forecasting Section
Forecast by: Jennifer Hill
Phone: 608-266-3322
Email: Jennifer.Hill@dot.wi.gov

Projected PM Design Hour Traffic Volumes

Design Hour: 4:30 - 5:30

Forecast Completed: October 6, 2011

Project Description

Project ID: 3080-00-09
Location: CTH N (Dane) to STH 26 (Jefferson)
Route: USH 12
Region/County: SW / Dane & Jefferson

Design Hour Turning Movement Data

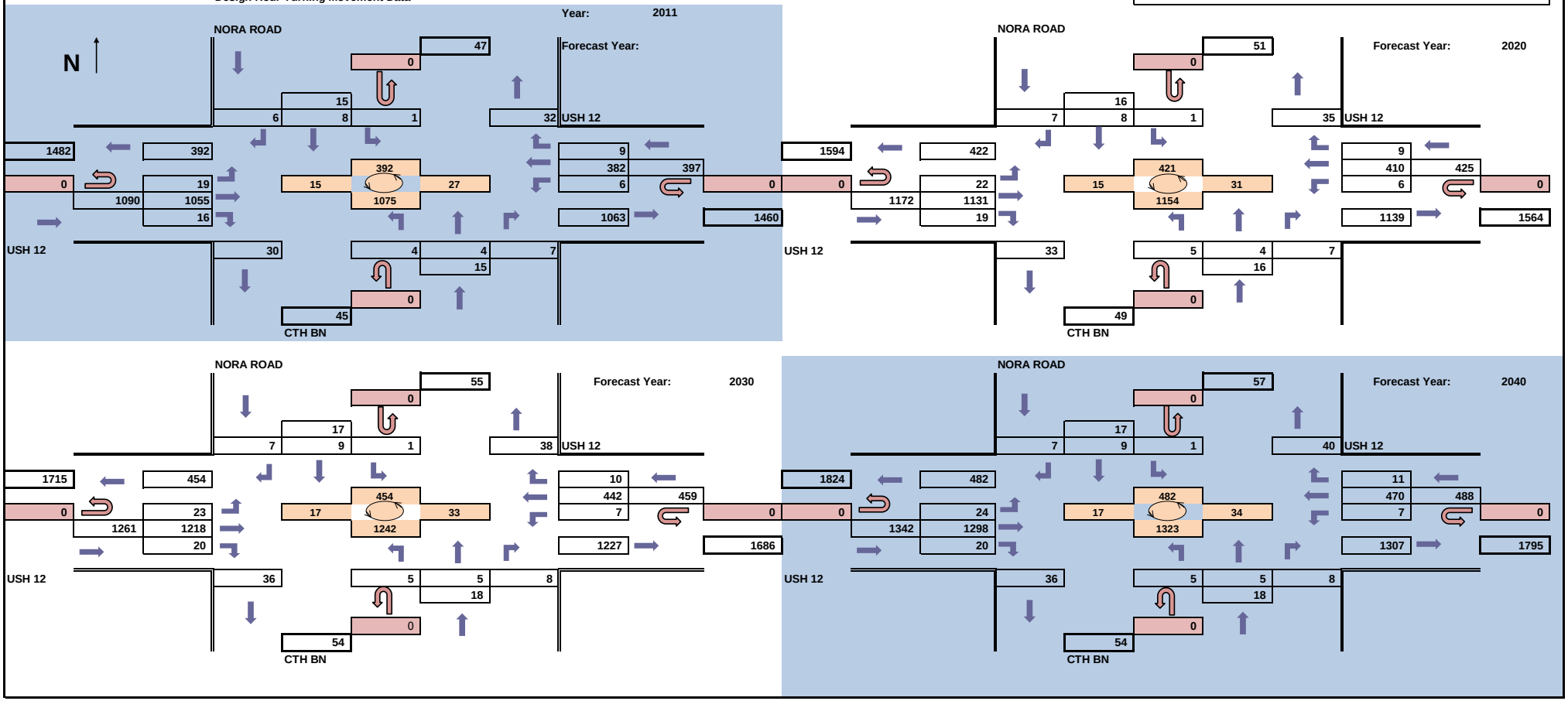

WisDot Bureau of Planning

Traffic Forecasting Section
Forecast by: Jennifer Hill
Phone: 608-266-3322
Email: Jennifer.Hill@dot.wi.gov

Projected Average Annual Daily Traffic Volumes

Design Hour: N/A

Forecast Completed: October 6, 2011

Project Description

Project ID: 3080-00-09
Location: CTH N (Dane) to STH 26 (Jefferson)
Route: USH 12
Region/County: SW / Dane & Jefferson

Turning Movement Data

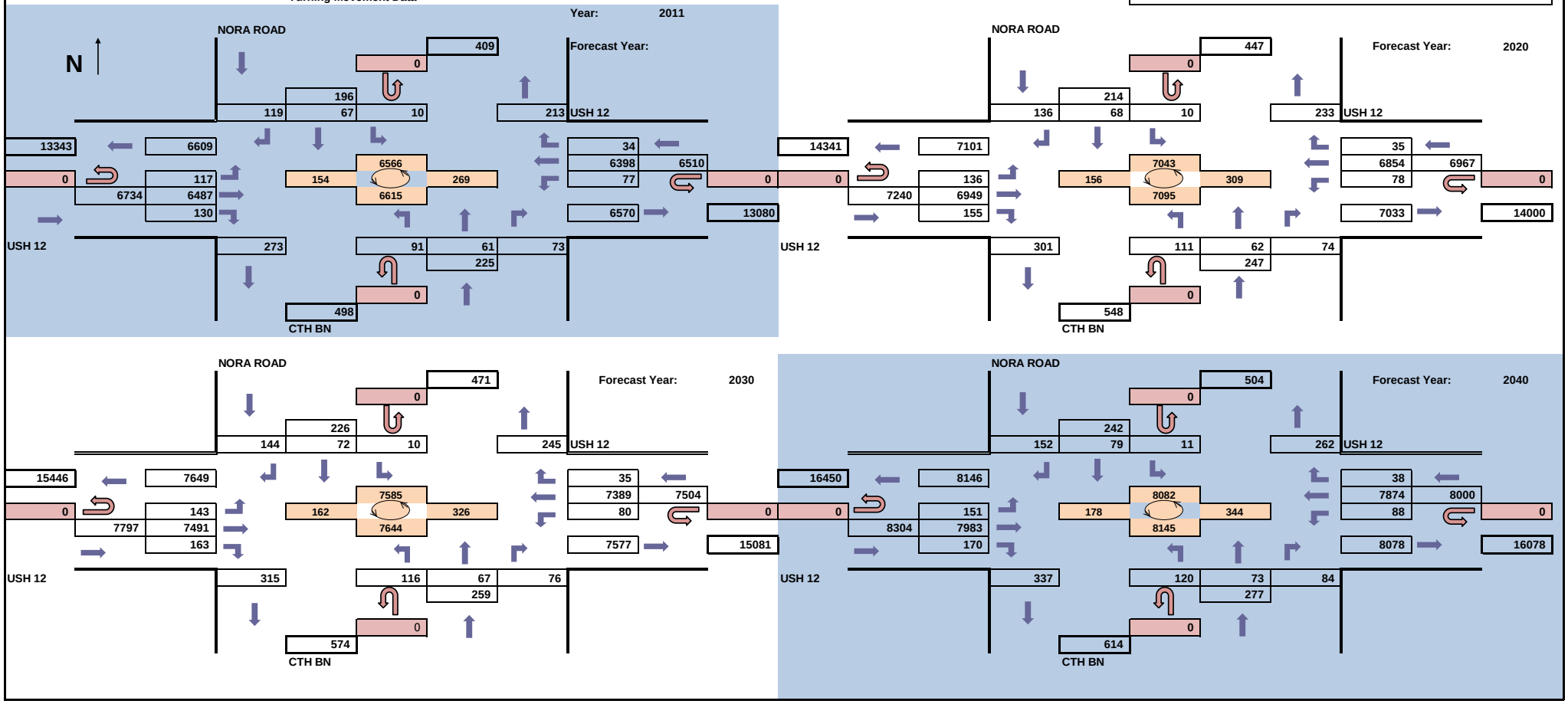

WisDot Bureau of Planning
Traffic Forecasting Section
Forecast by: Jennifer Hill
Phone: 608-266-3322
Email: Jennifer.Hill@dot.wi.gov

Projected AM Design Hour Traffic Volumes

Design Hour: 7:00 - 8:00

Forecast Completed: October 6, 2011

Project Description

Project ID: 3080-00-09
Location: CTH N (Dane) to STH 26 (Jefferson)
Route: USH 12
Region/County: SW / Dane & Jefferson

Design Hour Turning Movement Data

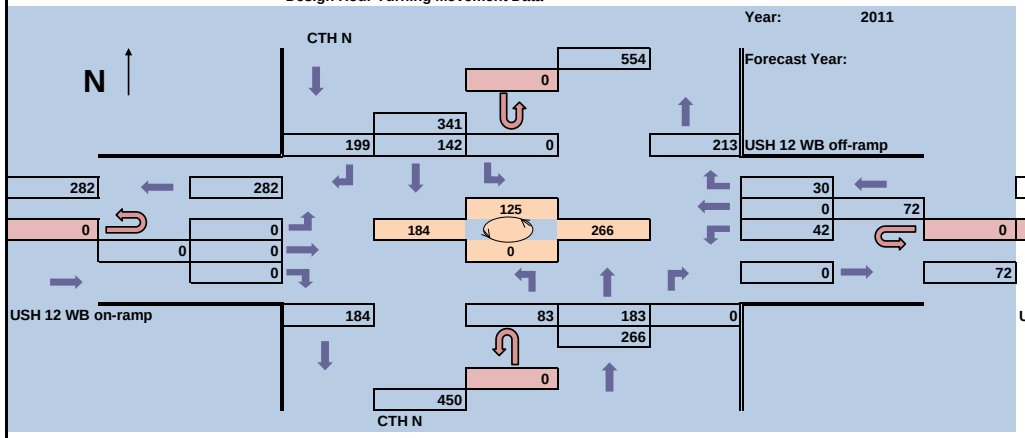

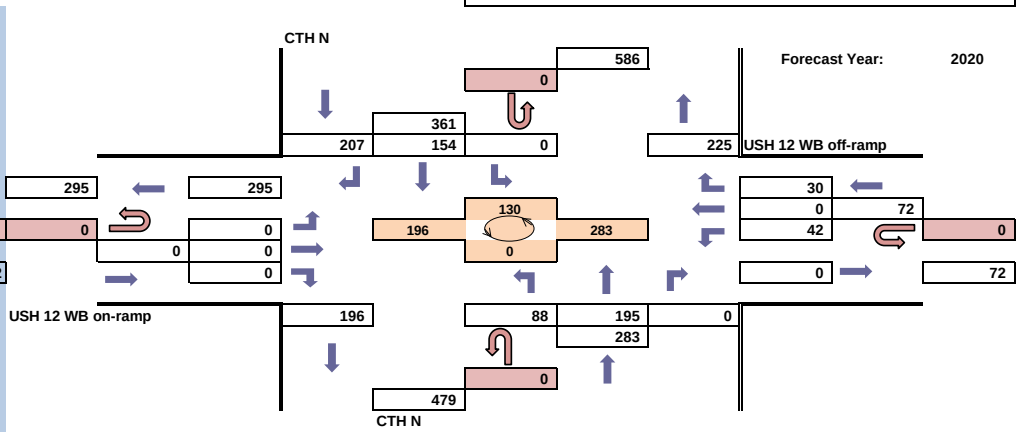

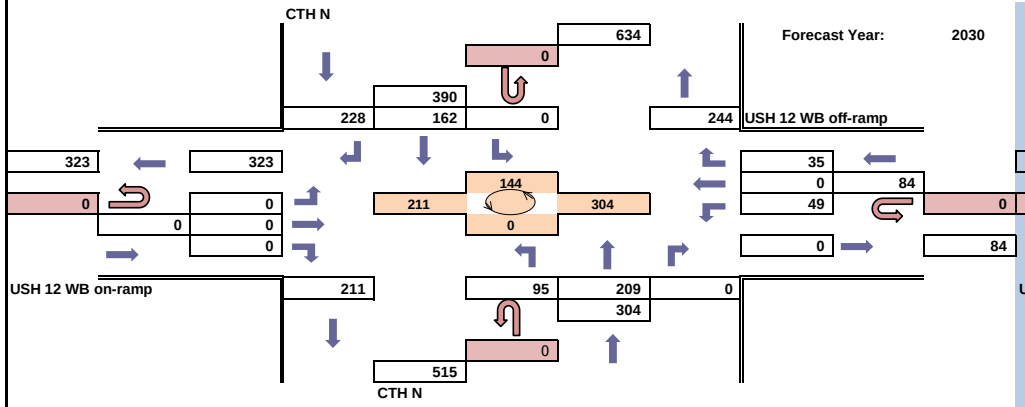

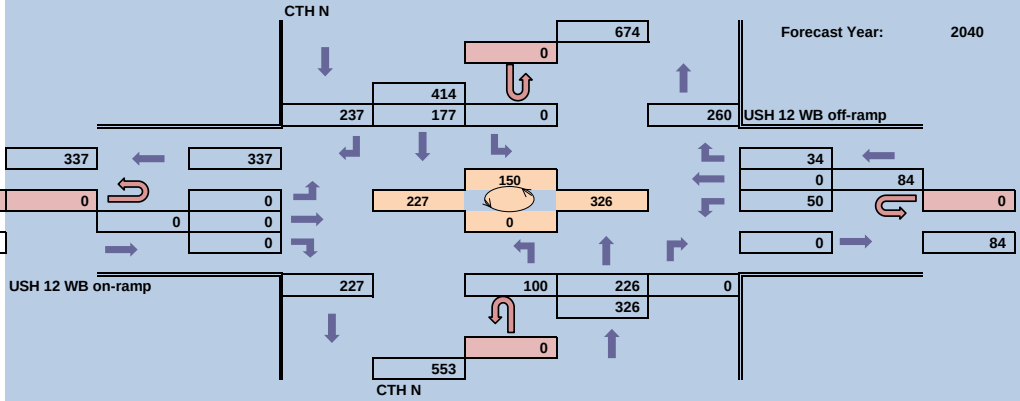

WisDot Bureau of Planning

Traffic Forecasting Section
Forecast by: Jennifer Hill
Phone: 608-266-3322
Email: Jennifer.Hill@dot.wi.gov

Projected PM Design Hour Traffic Volumes

Design Hour: 4:30 - 5:30

Forecast Completed: October 6, 2011

Project Description

Project ID: 3080-00-09
Location: CTH N (Dane) to STH 26 (Jefferson)
Route: USH 12
Region/County: SW / Dane & Jefferson

Design Hour Turning Movement Data

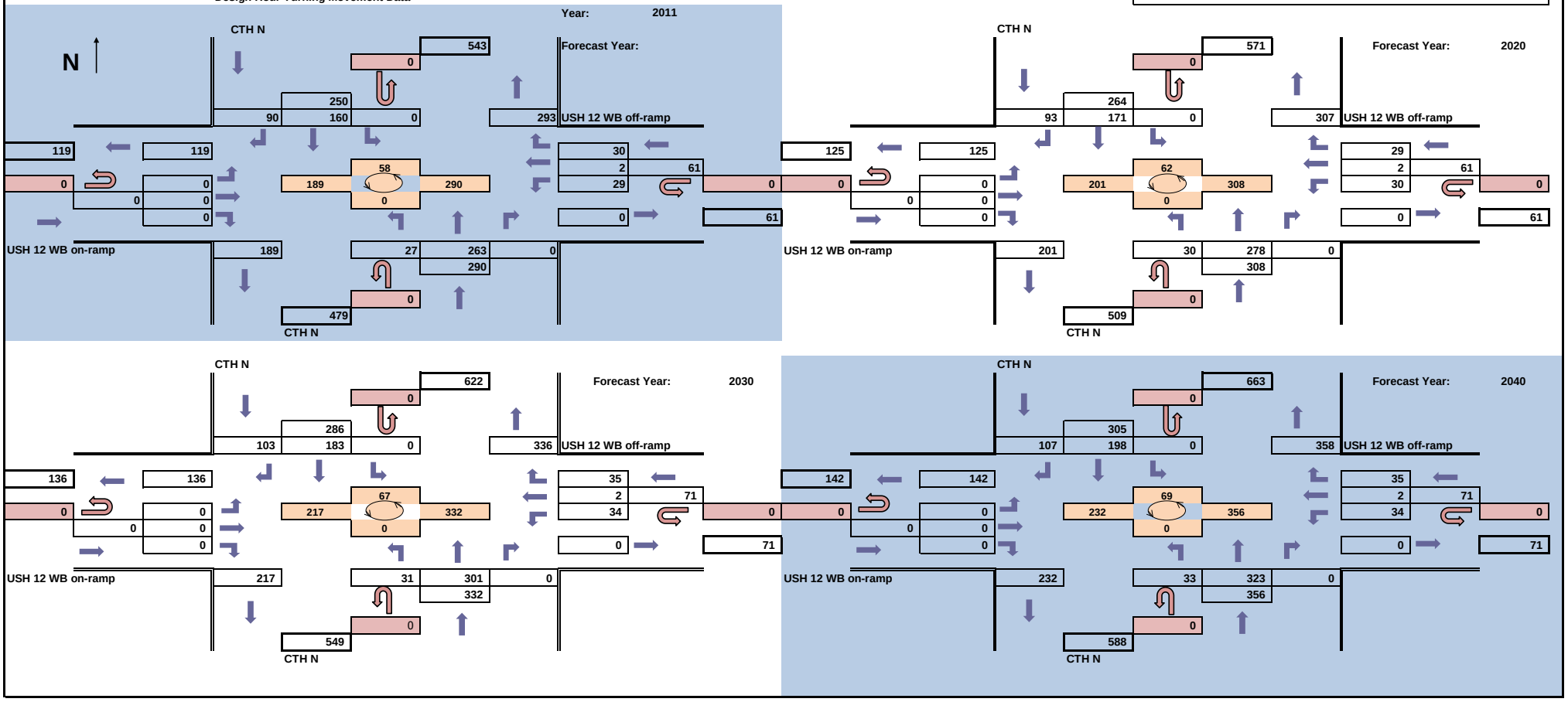

WisDot Bureau of Planning

Traffic Forecasting Section
Forecast by: Jennifer Hill
Phone: 608-266-3322
Email: Jennifer.Hill@dot.wi.gov

Projected Average Annual Daily Traffic Volumes

Design Hour: N/A

Forecast Completed: October 6, 2011

Project Description

Project ID: 3080-00-09
Location: CTH N (Dane) to STH 26 (Jefferson)
Route: USH 12
Region/County: SW / Dane & Jefferson

Turning Movement Data

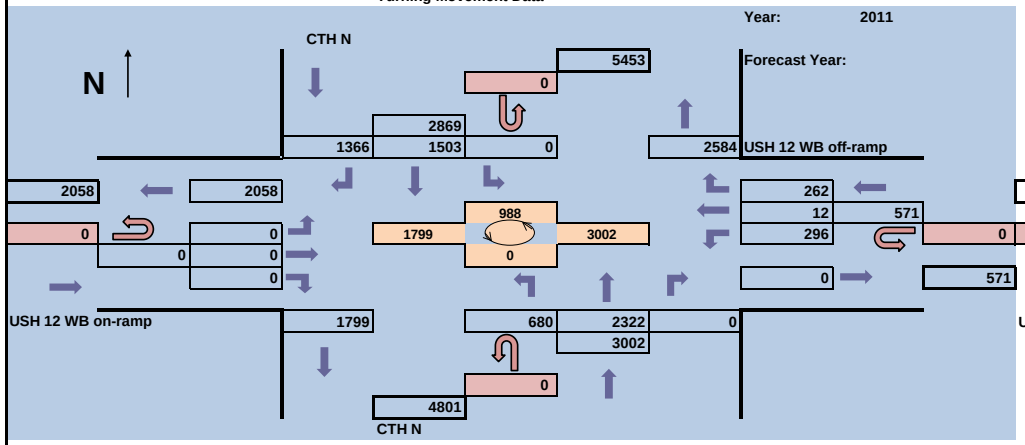

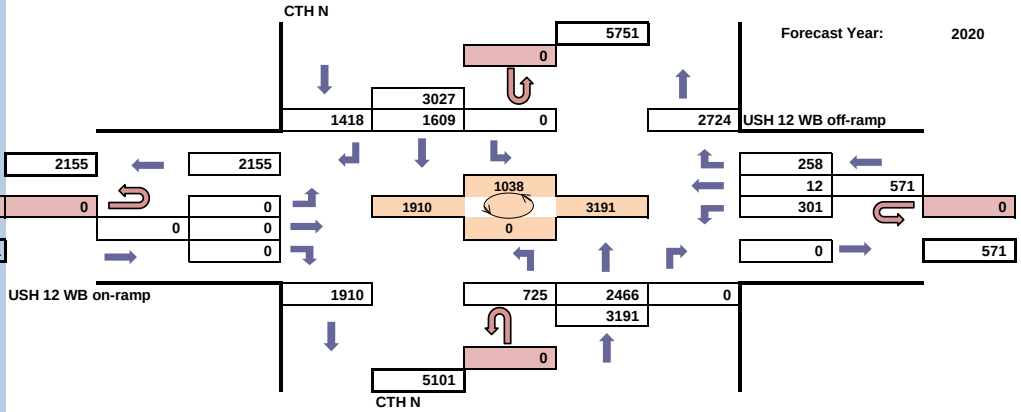

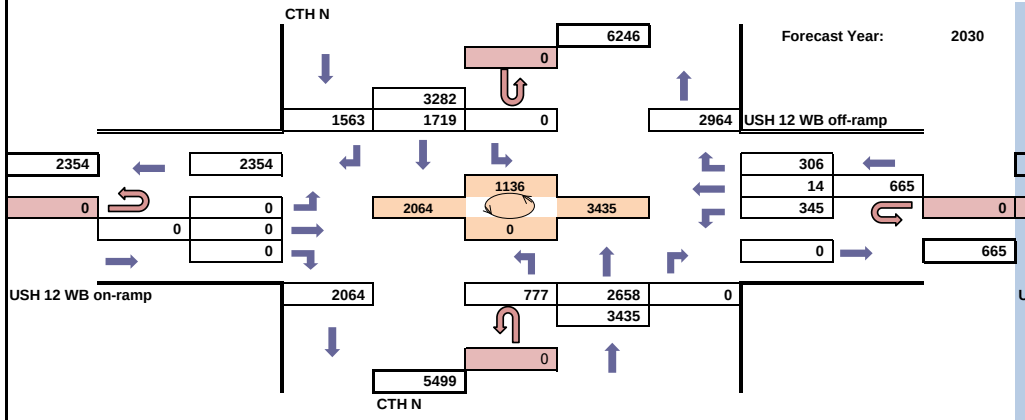

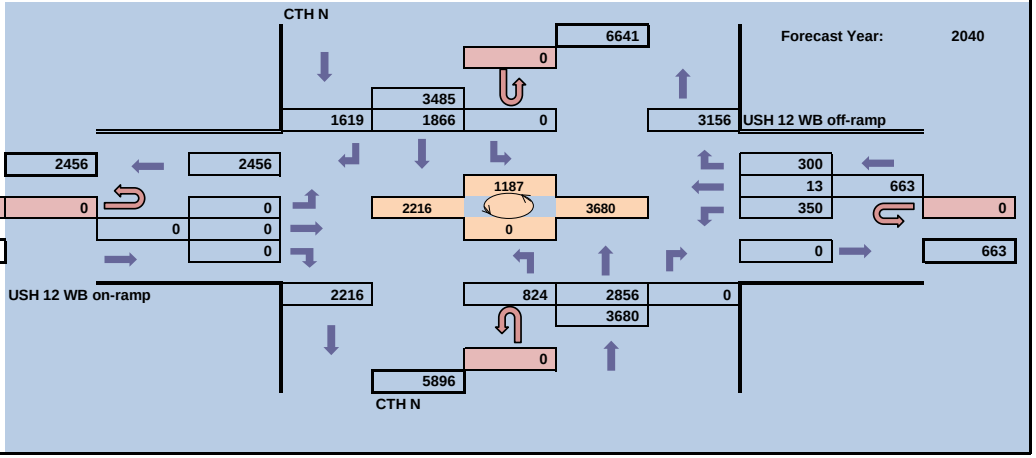

WisDot Bureau of Planning
Traffic Forecasting Section
Forecast by: Jennifer Hill
Phone: 608-266-3322
Email: Jennifer.Hill@dot.wi.gov

Projected AM Design Hour Traffic Volumes

Design Hour: 7:00 - 8:00

Forecast Completed: October 6, 2011

Project Description

Project ID: 3080-00-09
Location: CTH N (Dane) to STH 26 (Jefferson)
Route: USH 12
Region/County: SW / Dane & Jefferson

Design Hour Turning Movement Data

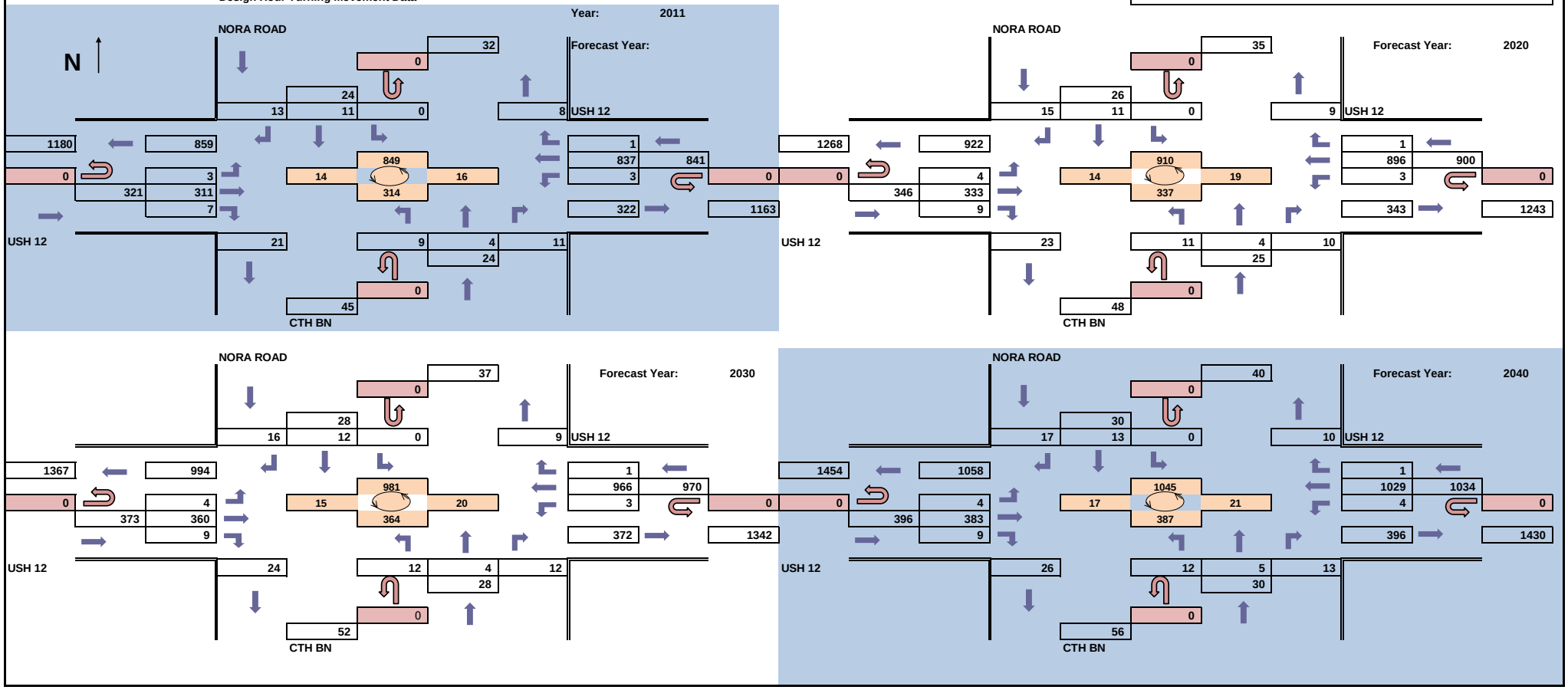

WisDot Bureau of Planning

Traffic Forecasting Section
Forecast by: Jennifer Hill
Phone: 608-266-3322
Email: Jennifer.Hill@dot.wi.gov

Projected PM Design Hour Traffic Volumes

Design Hour: 4:30 - 5:30

Forecast Completed: October 6, 2011

Project Description

Project ID: 3080-00-09
Location: CTH N (Dane) to STH 26 (Jefferson)
Route: USH 12
Region/County: SW / Dane & Jefferson

Design Hour Turning Movement Data

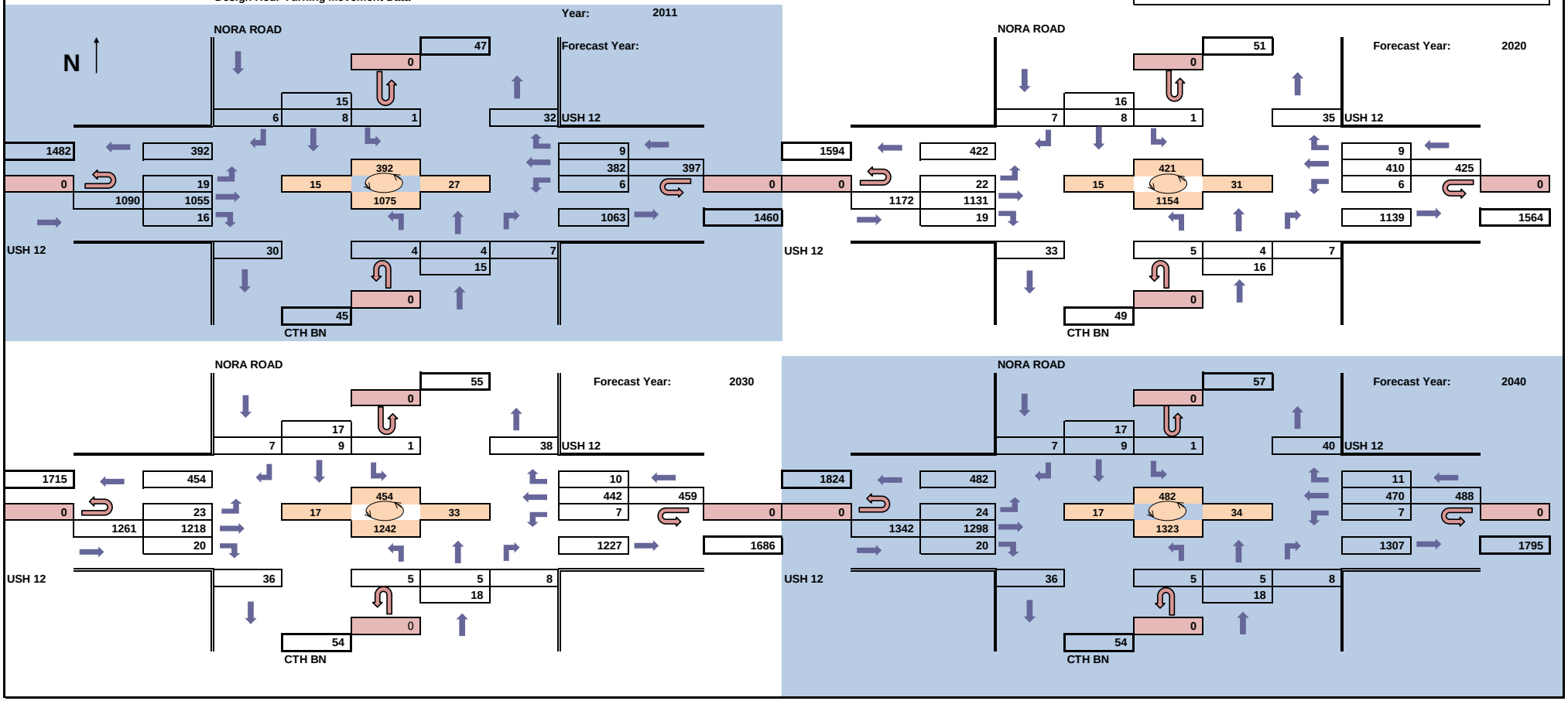

WisDot Bureau of Planning

Traffic Forecasting Section
Forecast by: Jennifer Hill
Phone: 608-266-3322
Email: Jennifer.Hill@dot.wi.gov

Projected Average Annual Daily Traffic Volumes

Design Hour: N/A

Forecast Completed: October 6, 2011

Project Description

Project ID: 3080-00-09
Location: CTH N (Dane) to STH 26 (Jefferson)
Route: USH 12
Region/County: SW / Dane & Jefferson

Turning Movement Data

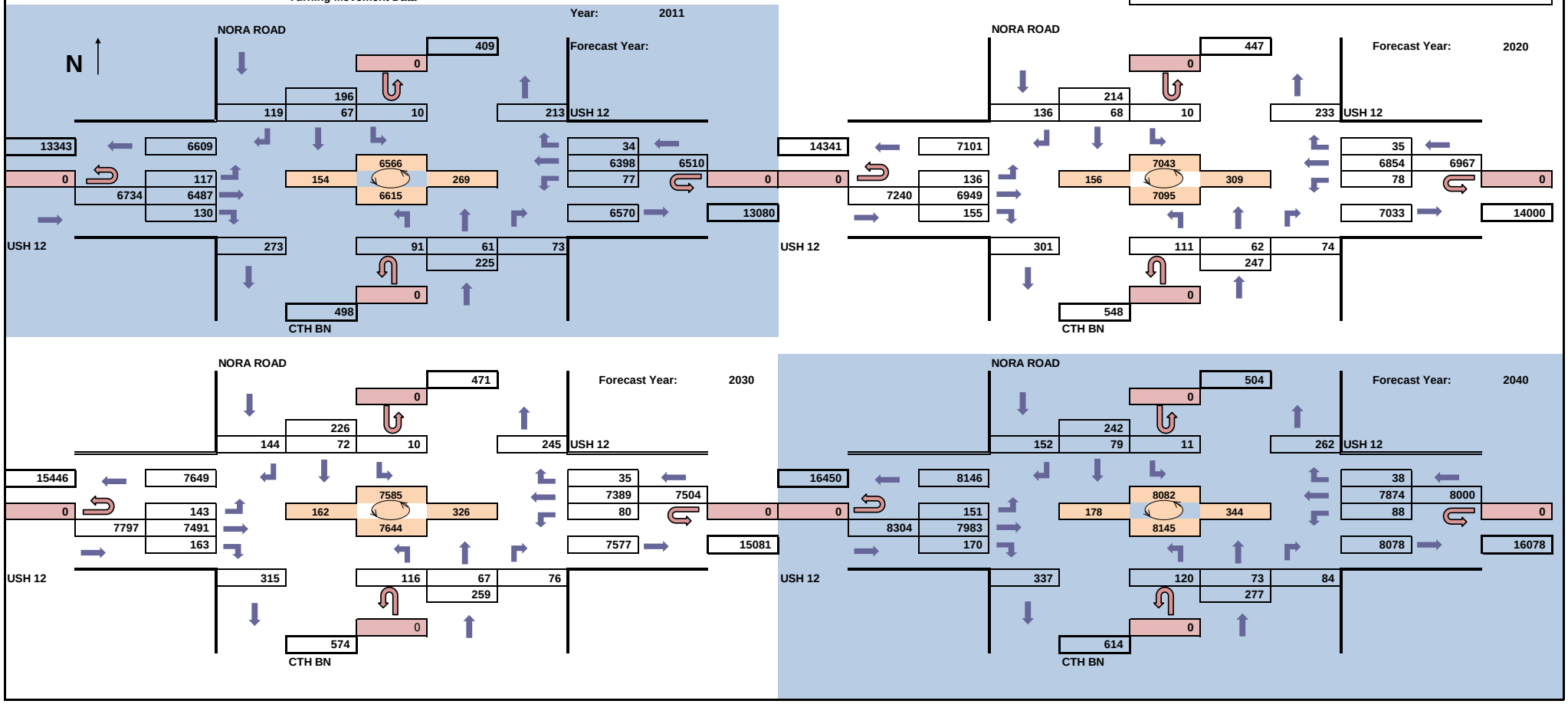

Projected AM Design Hour Traffic Volumes

WisDot Bureau of Planning
Traffic Forecasting Section
Forecast by: Jennifer Hill
Phone: 608-266-3322
Email: Jennifer.Hill@dot.wi.gov

Design Hour: 7:00 - 8:00

Forecast Completed: October 6, 2011

Project Description

Project ID: 3080-00-09
Location: CTH N (Dane) to STH 26 (Jefferson)
Route: USH 12
Region/County: SW / Dane & Jefferson

Design Hour Turning Movement Data

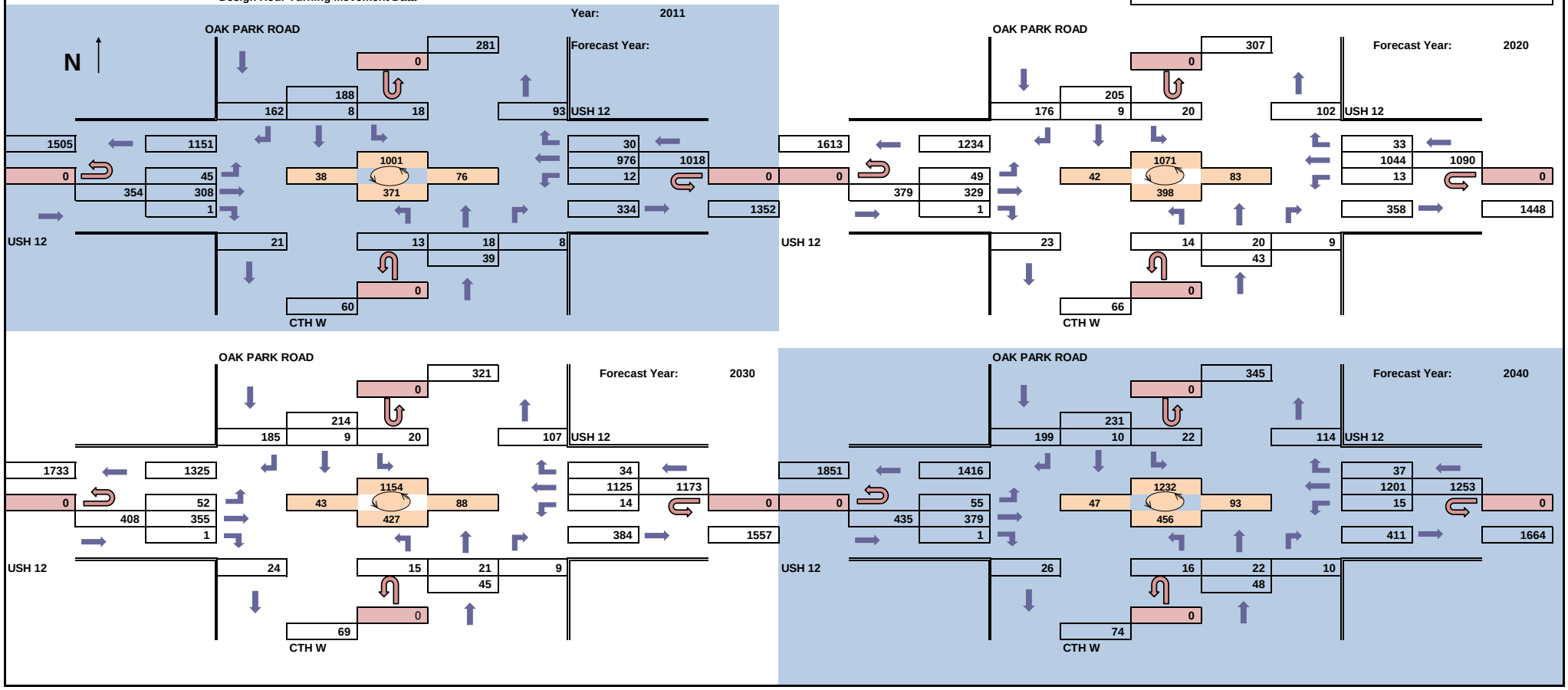

WisDot Bureau of Planning

Traffic Forecasting Section
Forecast by: Jennifer Hill
Phone: 608-266-3322
Email: Jennifer.Hill@dot.wi.gov

Projected PM Design Hour Traffic Volumes

Design Hour: 4:30 - 5:30

Forecast Completed: October 6, 2011

Project Description

Project ID: 3080-00-09
Location: CTH N (Dane) to STH 26 (Jefferson)
Route: USH 12
Region/County: SW / Dane & Jefferson

Design Hour Turning Movement Data

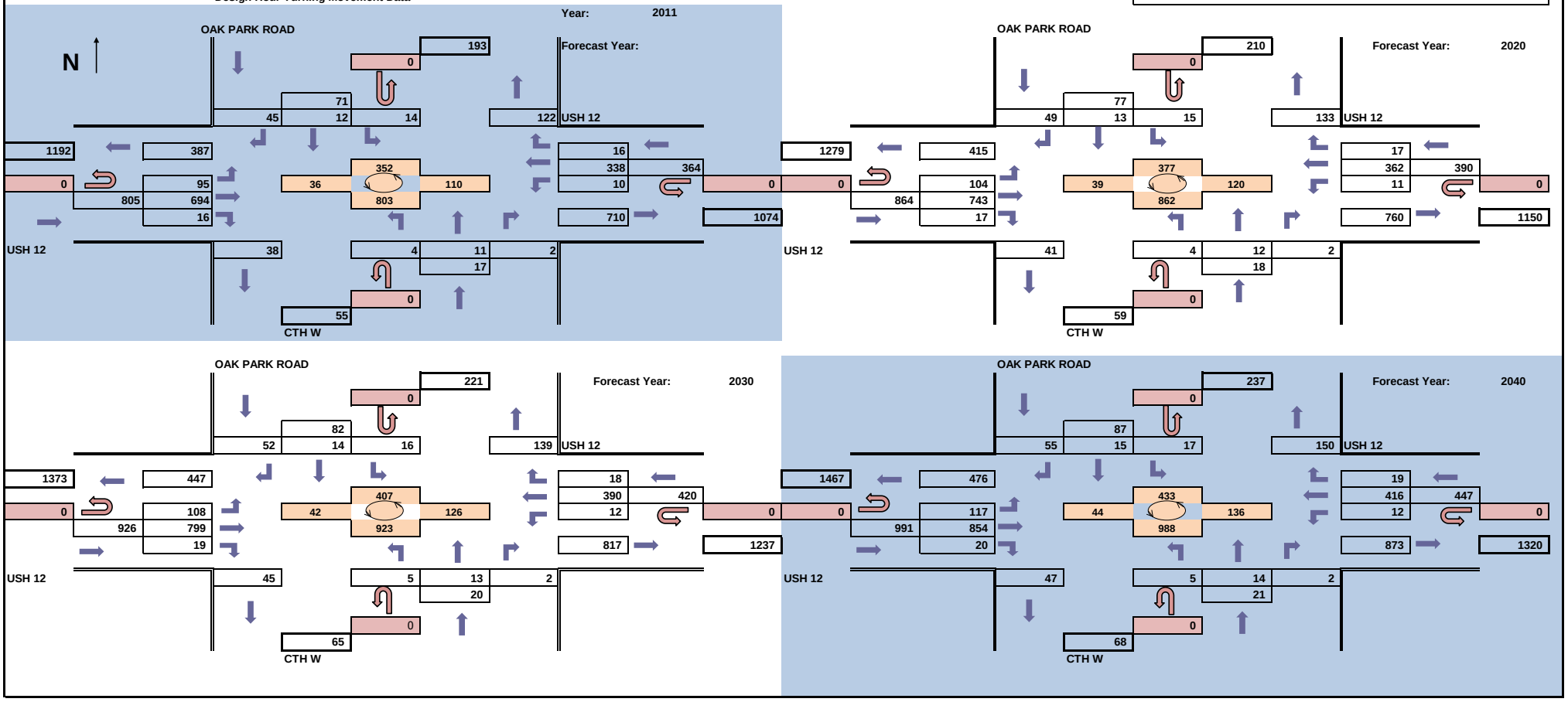

WisDot Bureau of Planning

Traffic Forecasting Section
Forecast by: Jennifer Hill
Phone: 608-266-3322
Email: Jennifer.Hill@dot.wi.gov

Projected Average Annual Daily Traffic Volumes

Design Hour: N/A

Forecast Completed: October 6, 2011

Project Description

Project ID: 3080-00-09
Location: CTH N (Dane) to STH 26 (Jefferson)
Route: USH 12
Region/County: SW / Dane & Jefferson

Turning Movement Data

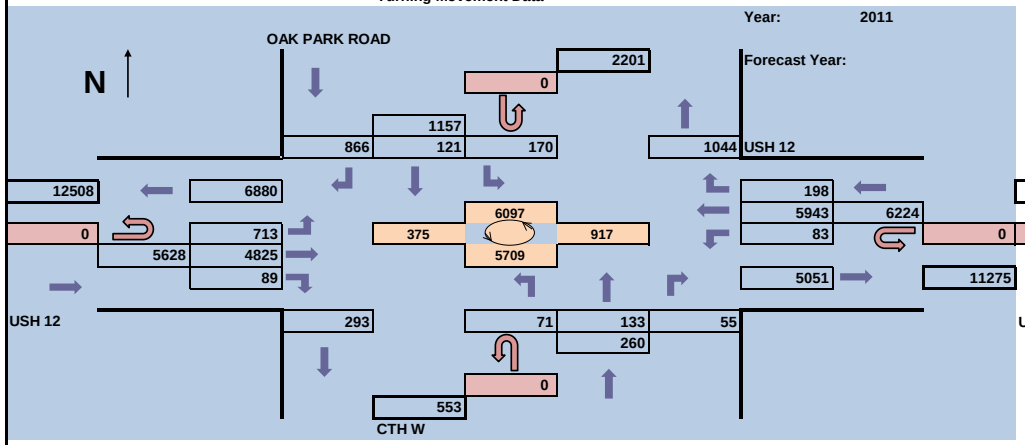

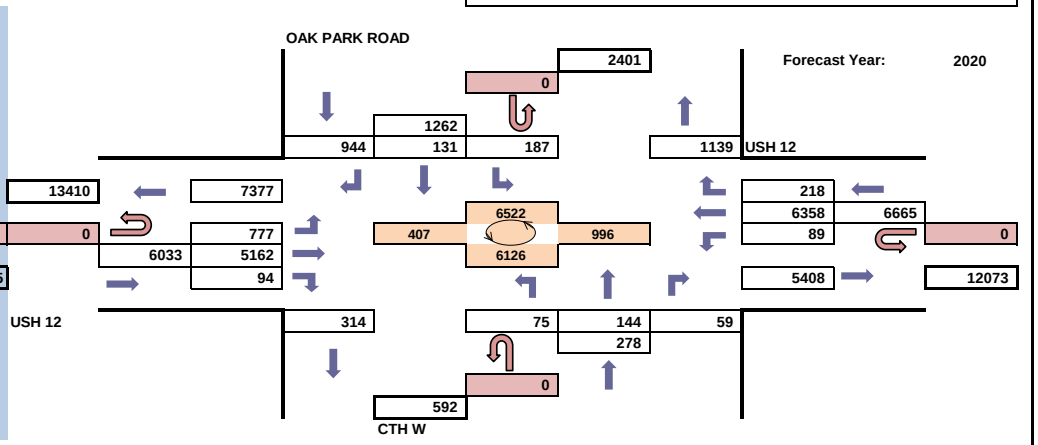

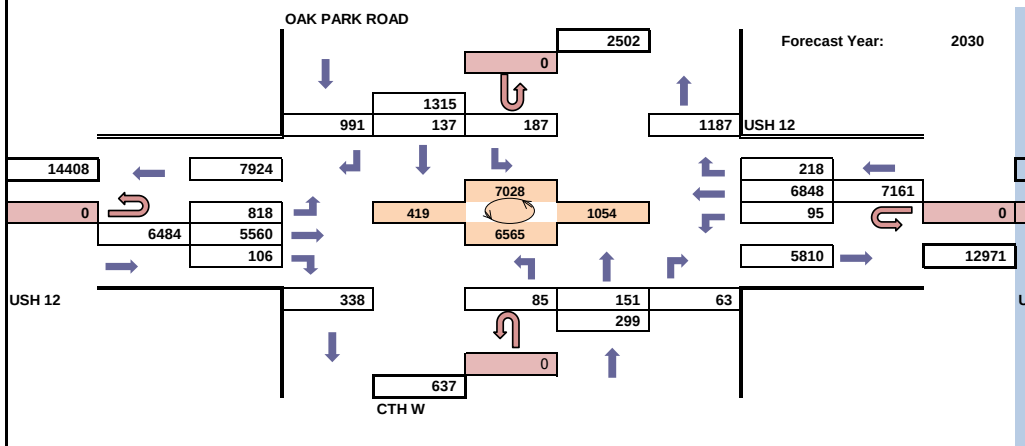

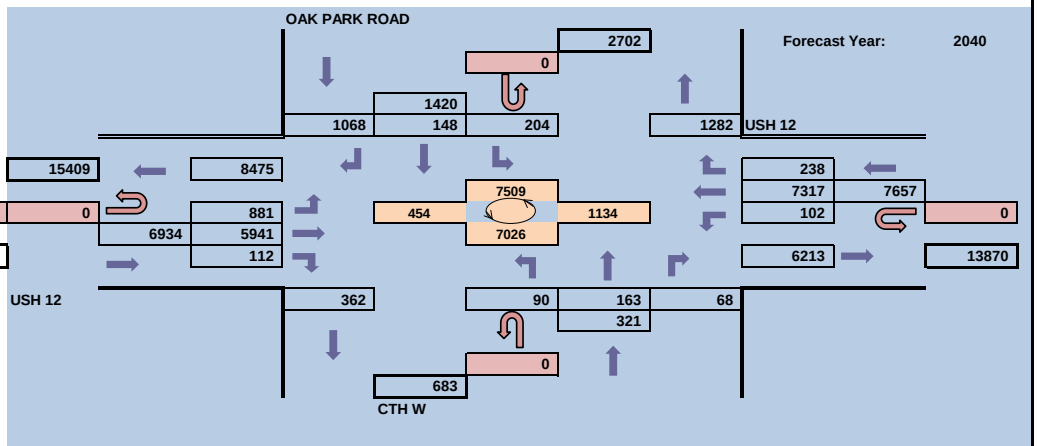

Projected AM Design Hour Traffic Volumes

WisDot Bureau of Planning
Traffic Forecasting Section
Forecast by: Jennifer Hill
Phone: 608-266-3322
Email: Jennifer.Hill@dot.wi.gov

Design Hour: 7:00 - 8:00

Forecast Completed: October 6, 2011

Project Description

Project ID: 3080-00-09
Location: CTH N (Dane) to STH 26 (Jefferson)
Route: USH 12
Region/County: SW / Dane & Jefferson

Design Hour Turning Movement Data

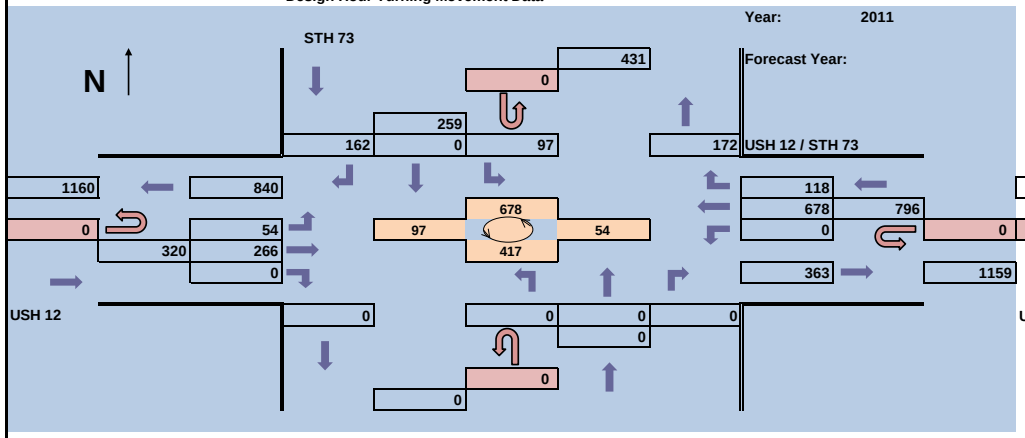

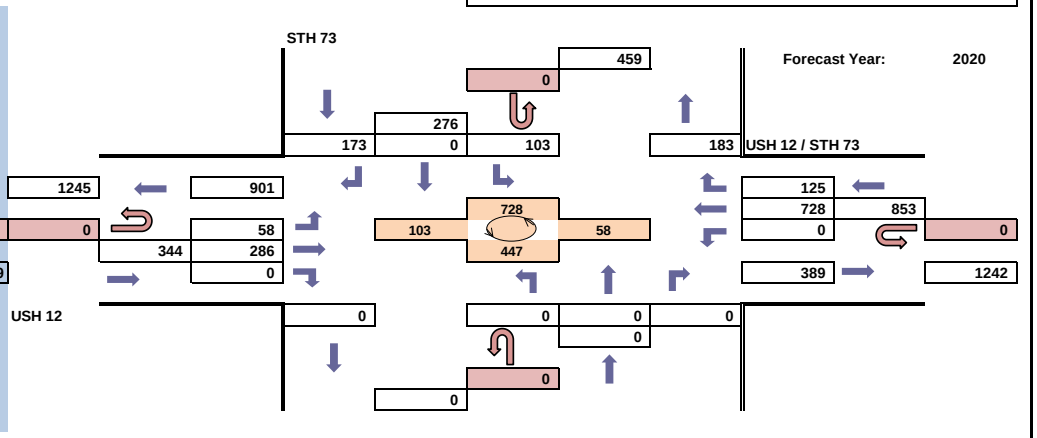

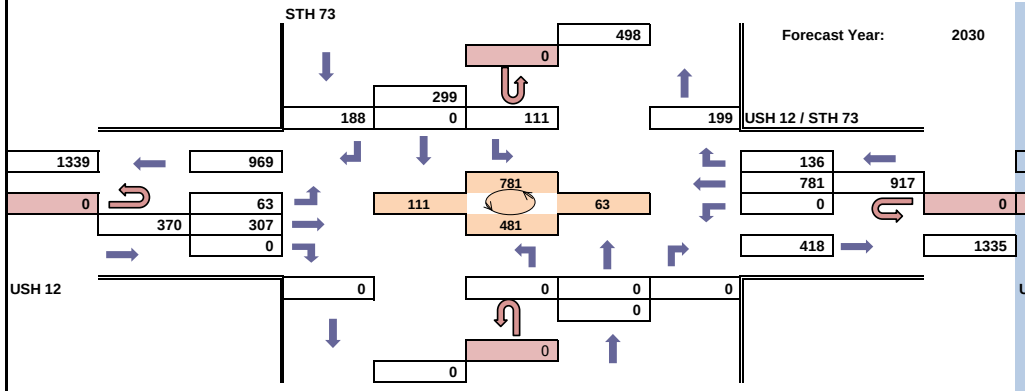

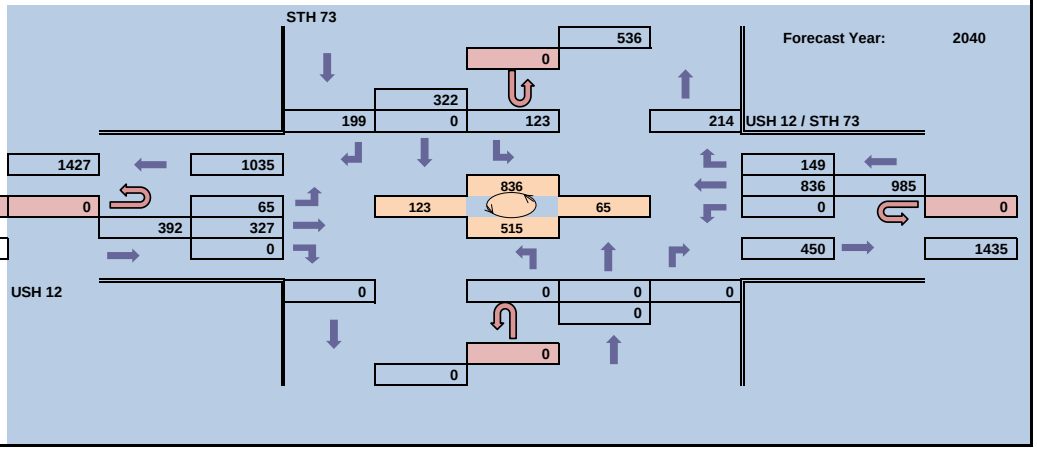

WisDot Bureau of Planning

Traffic Forecasting Section
Forecast by: Jennifer Hill
Phone: 608-266-3322
Email: Jennifer.Hill@dot.wi.gov

Projected PM Design Hour Traffic Volumes

Design Hour: 4:30 - 5:30

Forecast Completed: October 6, 2011

Project Description

Project ID: 3080-00-09
Location: CTH N (Dane) to STH 26 (Jefferson)
Route: USH 12
Region/County: SW / Dane & Jefferson

Design Hour Turning Movement Data

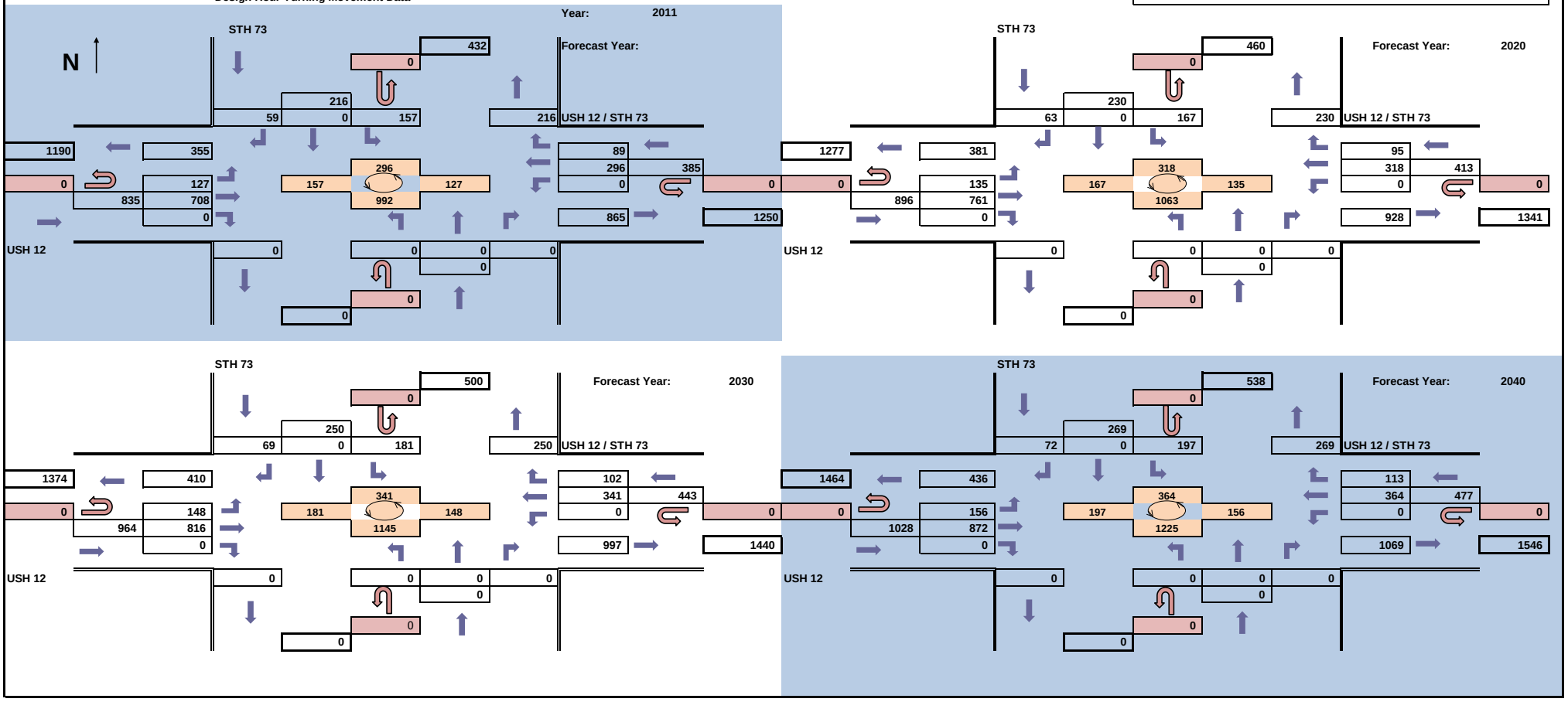

WisDot Bureau of Planning

Traffic Forecasting Section
Forecast by: Jennifer Hill
Phone: 608-266-3322
Email: Jennifer.Hill@dot.wi.gov

Projected Average Annual Daily Traffic Volumes

Design Hour: N/A

Forecast Completed: October 6, 2011

Project Description

Project ID: 3080-00-09
Location: CTH N (Dane) to STH 26 (Jefferson)
Route: USH 12
Region/County: SW / Dane & Jefferson

Turning Movement Data

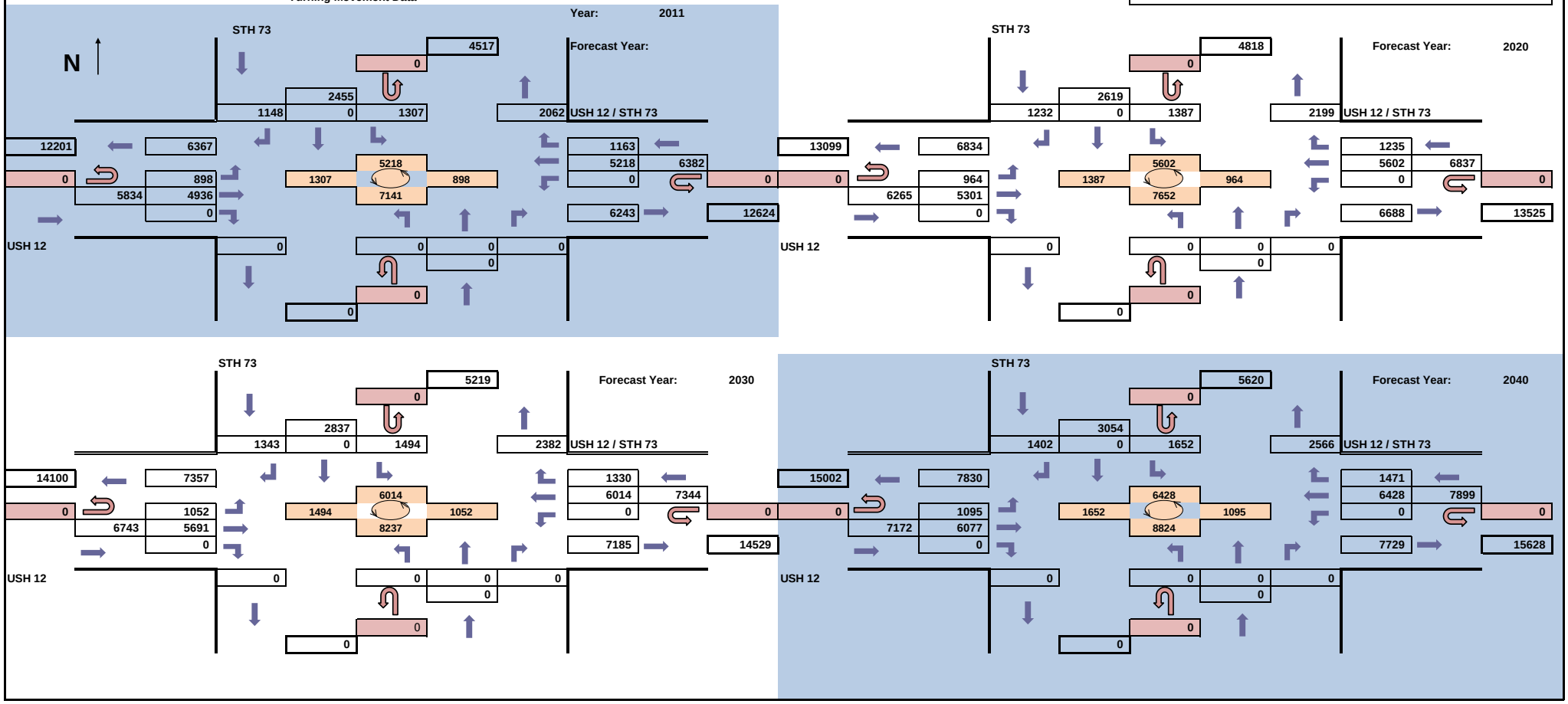

WisDot Bureau of Planning
Traffic Forecasting Section
Forecast by: Jennifer Hill
Phone: 608-266-3322
Email: Jennifer.Hill@dot.wi.gov

Projected AM Design Hour Traffic Volumes

Design Hour: 7:00 - 8:00

Forecast Completed: October 6, 2011

Project Description

Project ID: 3080-00-09
Location: CTH N (Dane) to STH 26 (Jefferson)
Route: USH 12
Region/County: SW / Dane & Jefferson

Design Hour Turning Movement Data

Year: 2011

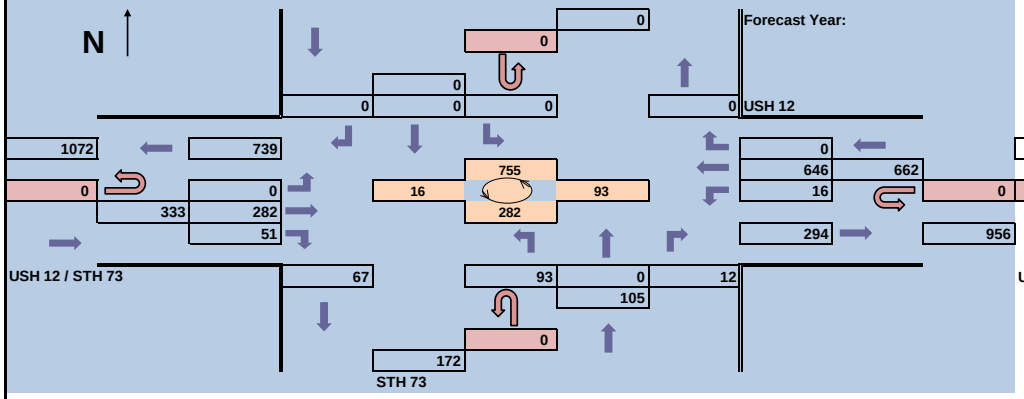

Forecast Year: 2020

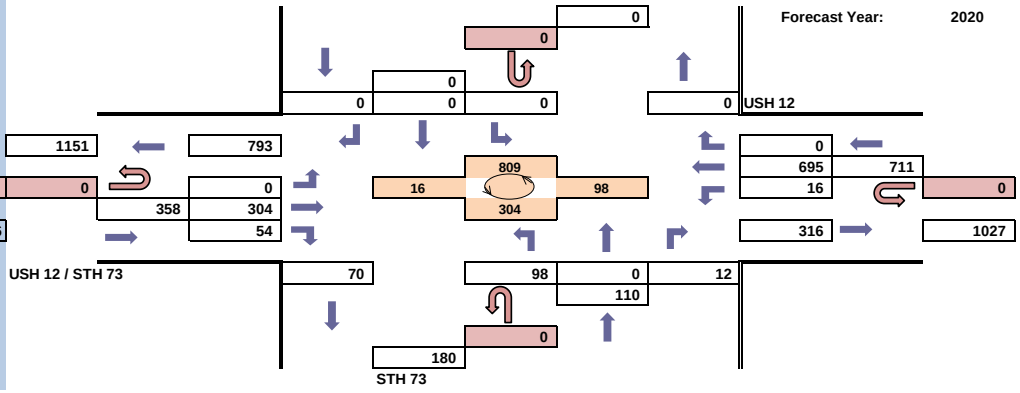

Forecast Year: 2030

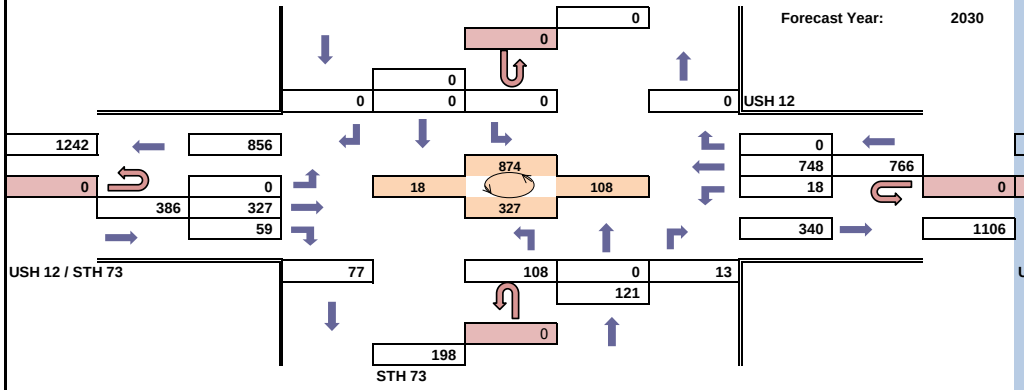

Forecast Year: 2040

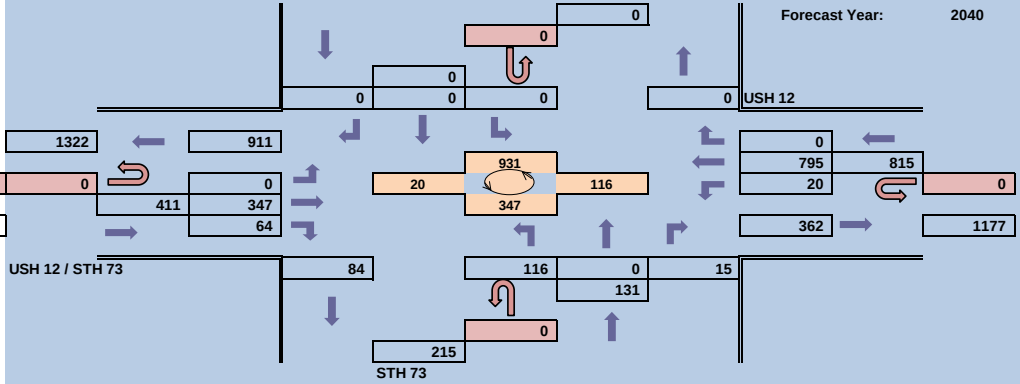

WisDot Bureau of Planning

Traffic Forecasting Section
Forecast by: Jennifer Hill
Phone: 608-266-3322
Email: Jennifer.Hill@dot.wi.gov

Projected PM Design Hour Traffic Volumes

Design Hour: 4:30 - 5:30

Forecast Completed: October 6, 2011

Project Description

Project ID: 3080-00-09
Location: CTH N (Dane) to STH 26 (Jefferson)
Route: USH 12
Region/County: SW / Dane & Jefferson

Design Hour Turning Movement Data

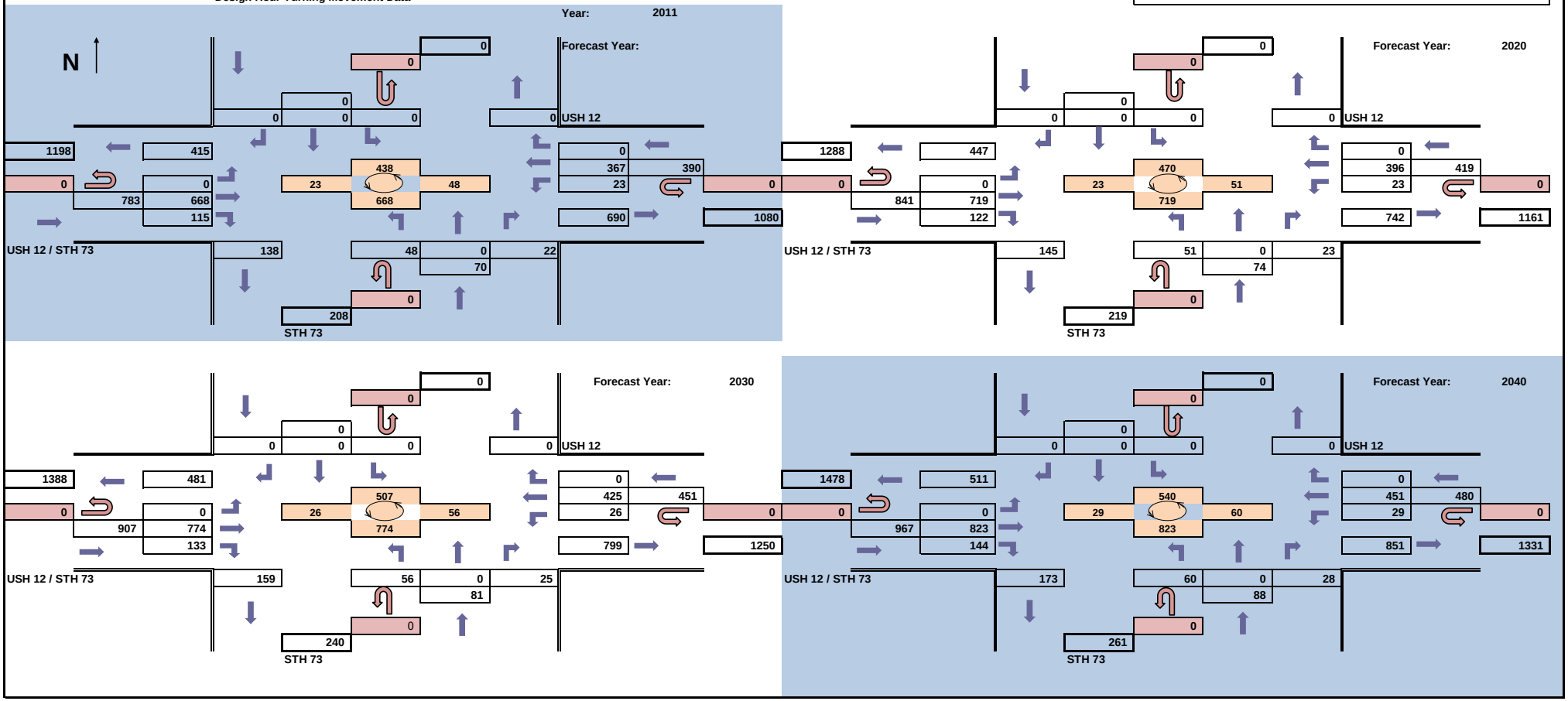

WisDot Bureau of Planning

Traffic Forecasting Section
Forecast by: Jennifer Hill
Phone: 608-266-3322
Email: Jennifer.Hill@dot.wi.gov

Projected Average Annual Daily Traffic Volumes

Design Hour: N/A

Forecast Completed: October 6, 2011

Project Description

Project ID: 3080-00-09
Location: CTH N (Dane) to STH 26 (Jefferson)
Route: USH 12
Region/County: SW / Dane & Jefferson

Turning Movement Data

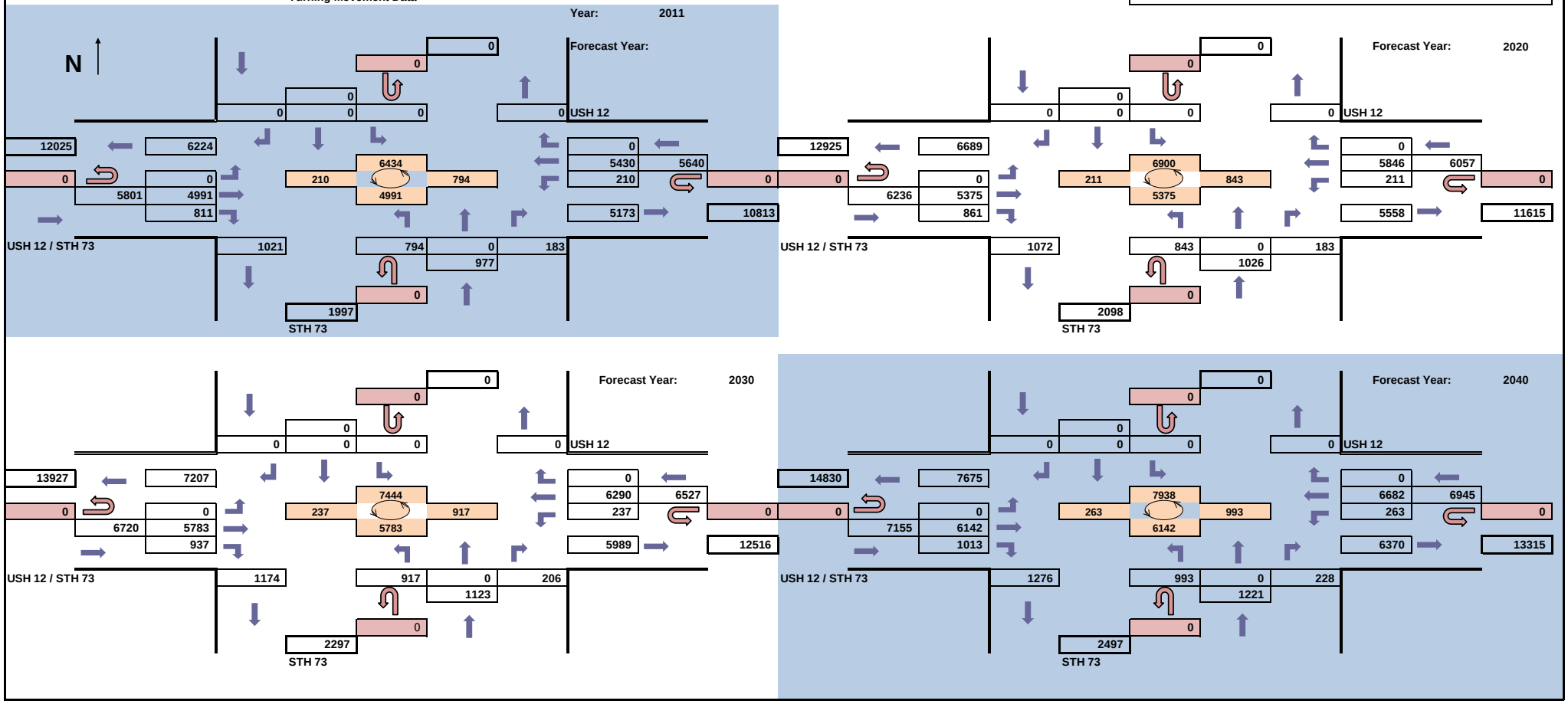

Projected AM Design Hour Traffic Volumes

WisDot Bureau of Planning
Traffic Forecasting Section
Forecast by: Jennifer Hill
Phone: 608-266-3322
Email: Jennifer.Hill@dot.wi.gov

Design Hour: 7:00 - 8:00

Forecast Completed: October 6, 2011

Project Description

Project ID: 3080-00-09
Location: CTH N (Dane) to STH 26 (Jefferson)
Route: USH 12
Region/County: SW / Dane & Jefferson

Design Hour Turning Movement Data

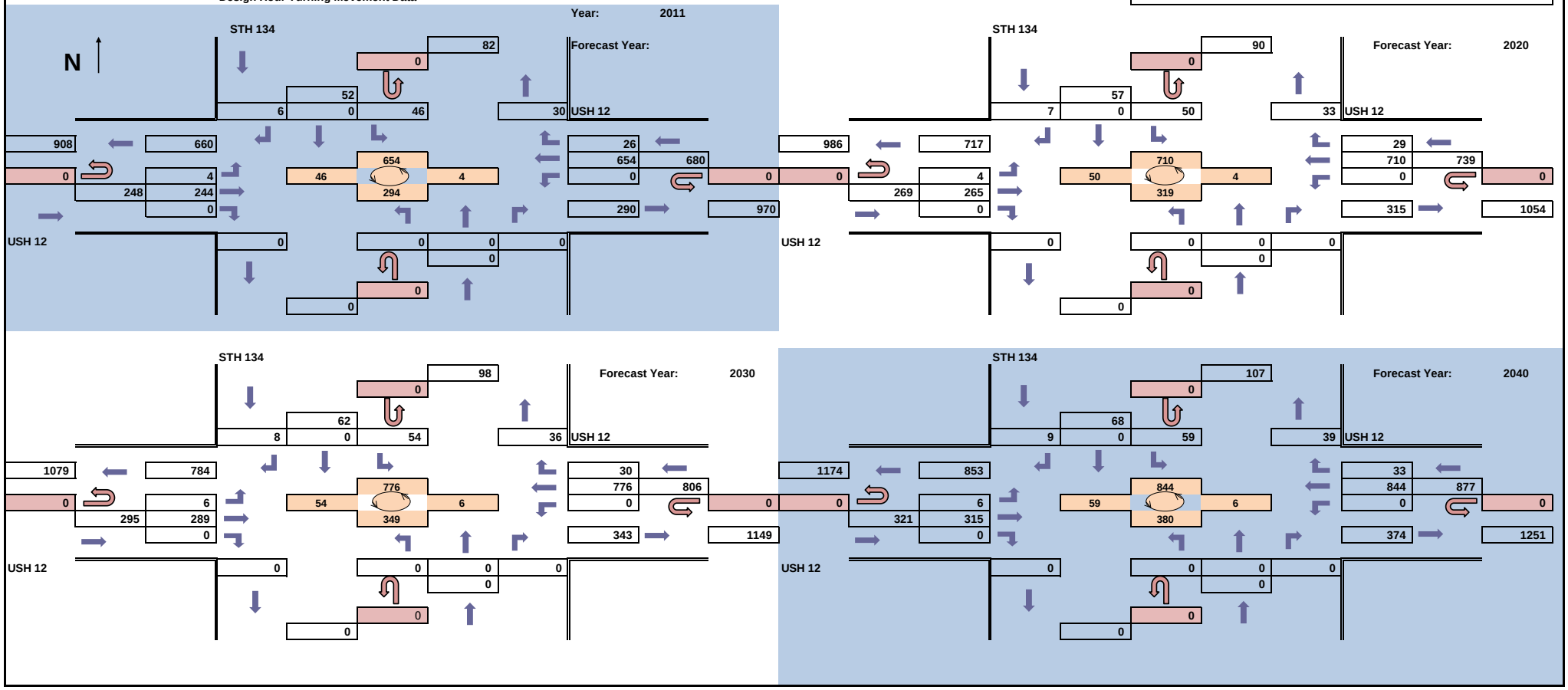

WisDot Bureau of Planning

Traffic Forecasting Section
Forecast by: Jennifer Hill
Phone: 608-266-3322
Email: Jennifer.Hill@dot.wi.gov

Projected PM Design Hour Traffic Volumes

Design Hour: 4:30 - 5:30

Forecast Completed: October 6, 2011

Project Description

Project ID: 3080-00-09
Location: CTH N (Dane) to STH 26 (Jefferson)
Route: USH 12
Region/County: SW / Dane & Jefferson

Design Hour Turning Movement Data

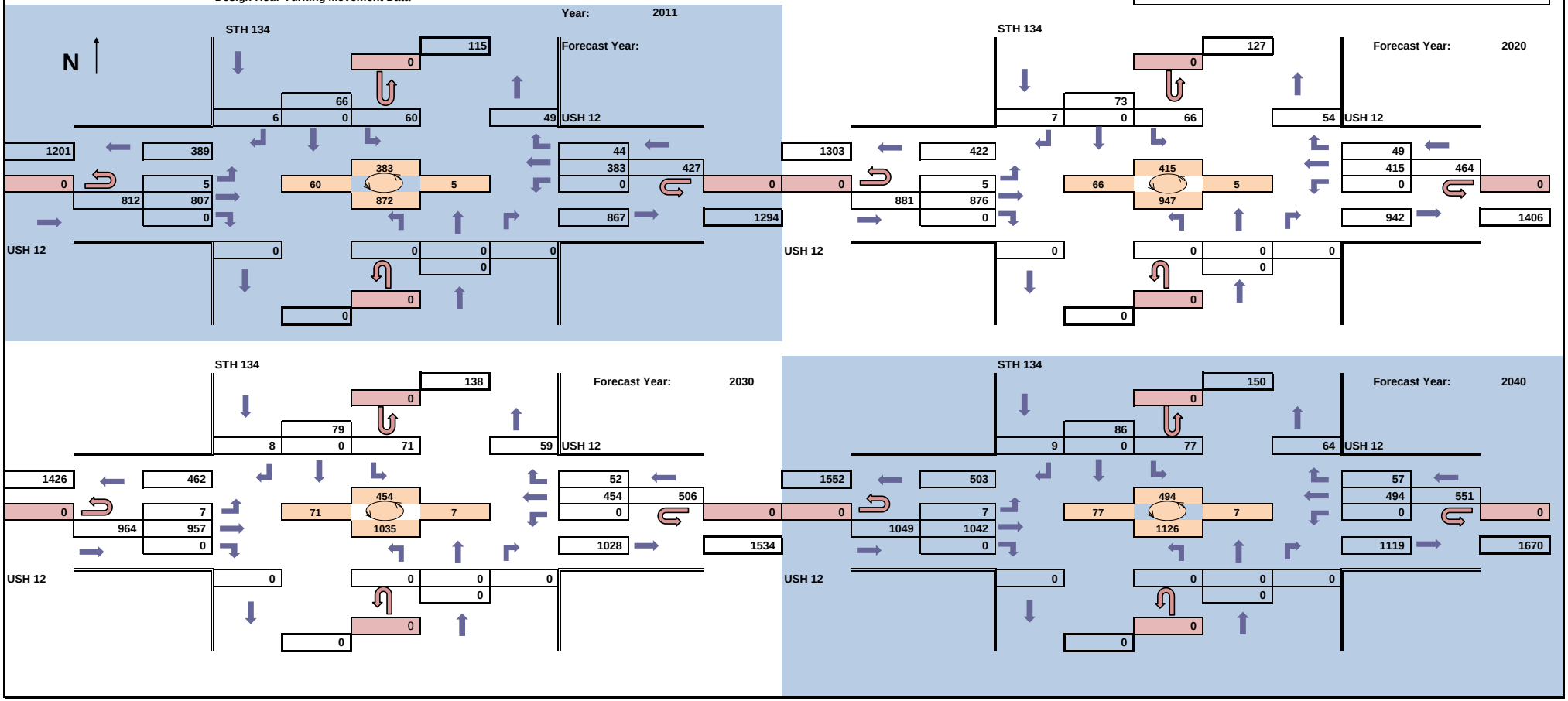

WisDot Bureau of Planning

Traffic Forecasting Section
Forecast by: Jennifer Hill
Phone: 608-266-3322
Email: Jennifer.Hill@dot.wi.gov

Projected Average Annual Daily Traffic Volumes

Design Hour: N/A

Forecast Completed: October 6, 2011

Project Description

Project ID: 3080-00-09
Location: CTH N (Dane) to STH 26 (Jefferson)
Route: USH 12
Region/County: SW / Dane & Jefferson

Turning Movement Data

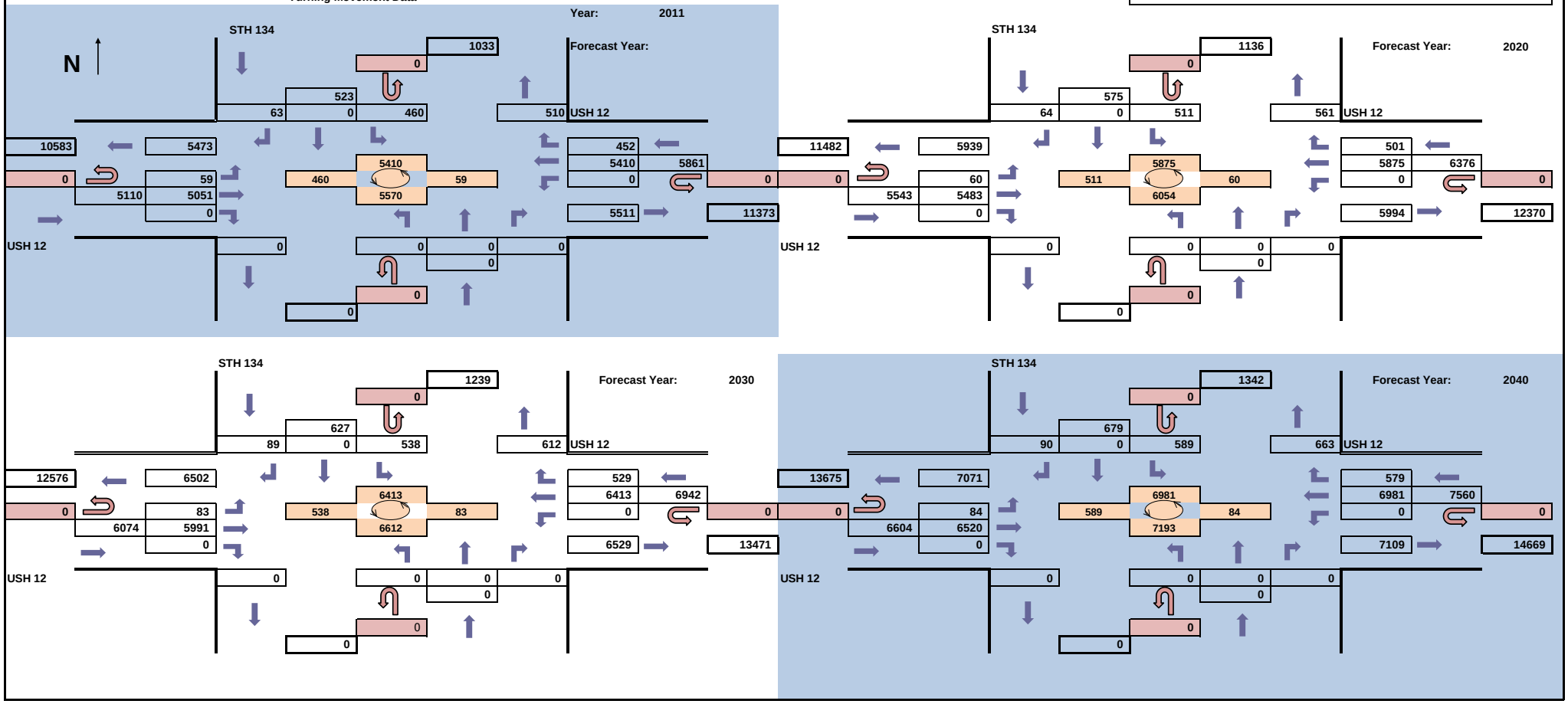

WisDot Bureau of Planning
Traffic Forecasting Section
Forecast by: Jennifer Hill
Phone: 608-266-3322
Email: Jennifer.Hill@dot.wi.gov

Projected AM Design Hour Traffic Volumes

Design Hour: 7:00 - 8:00

Forecast Completed: October 6, 2011

Project Description

Project ID: 3080-00-09
Location: CTH N (Dane) to STH 26 (Jefferson)
Route: USH 12
Region/County: SW / Dane & Jefferson

Design Hour Turning Movement Data

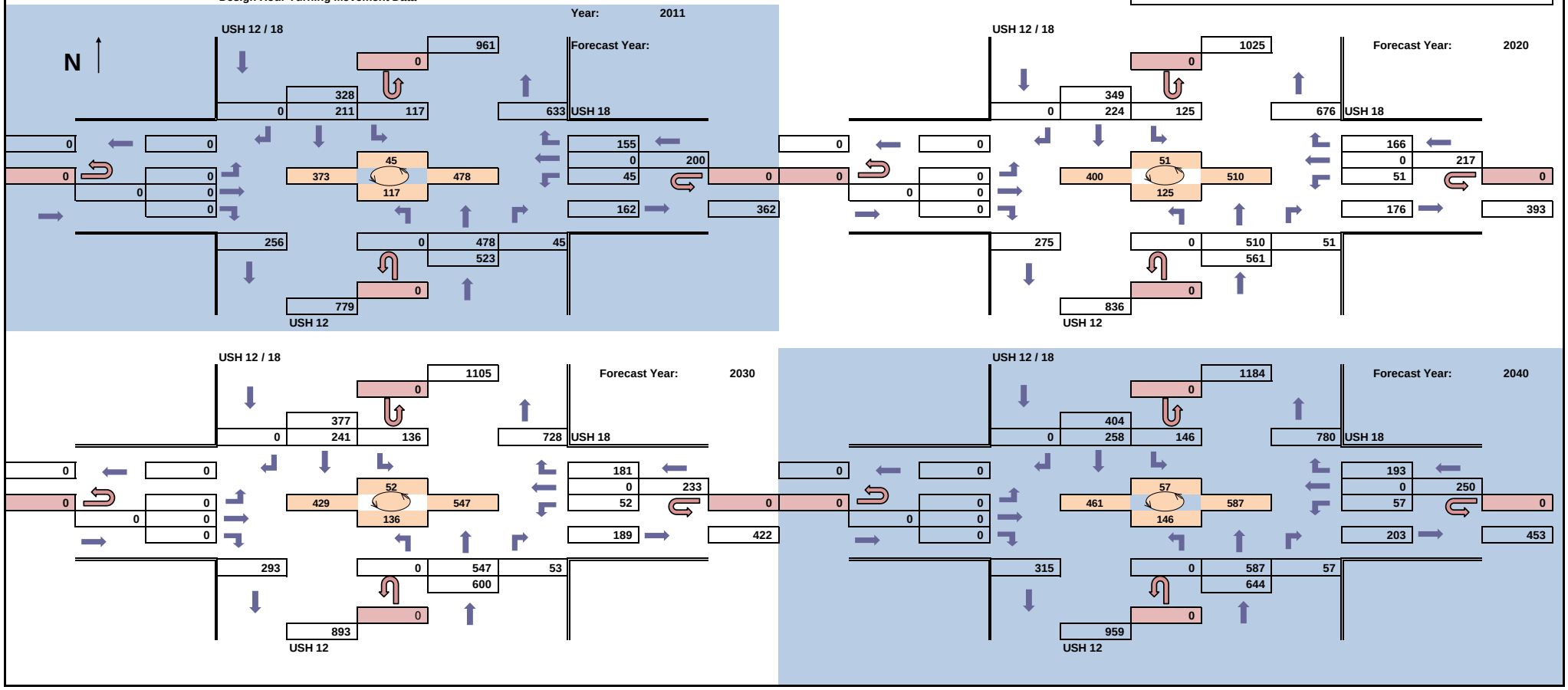

WisDot Bureau of Planning

Traffic Forecasting Section
Forecast by: Jennifer Hill
Phone: 608-266-3322
Email: Jennifer.Hill@dot.wi.gov

Projected PM Design Hour Traffic Volumes

Design Hour: 4:30 - 5:30

Forecast Completed: October 6, 2011

Project Description

Project ID: 3080-00-09
Location: CTH N (Dane) to STH 26 (Jefferson)
Route: USH 12
Region/County: SW / Dane & Jefferson

Design Hour Turning Movement Data

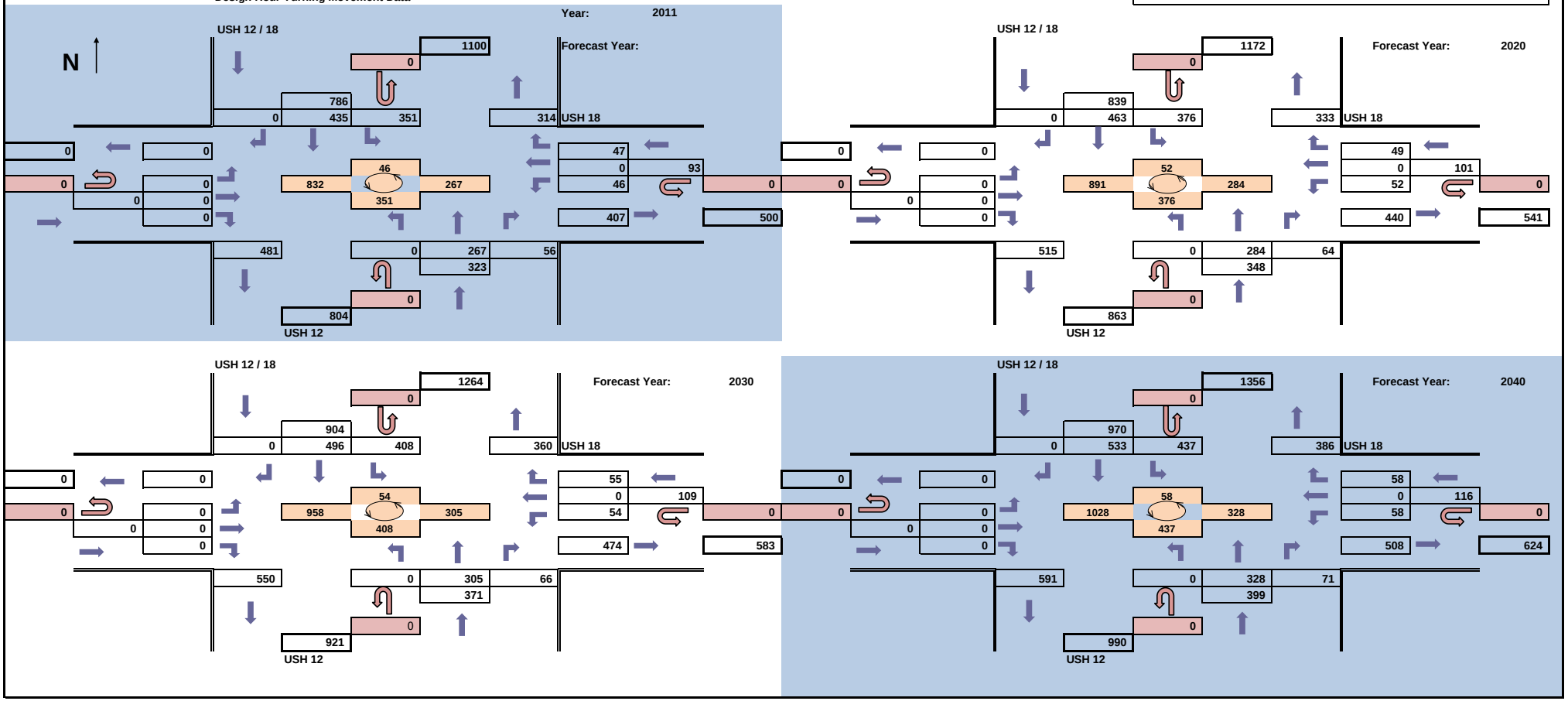

WisDot Bureau of Planning

Traffic Forecasting Section
Forecast by: Jennifer Hill
Phone: 608-266-3322
Email: Jennifer.Hill@dot.wi.gov

Projected Average Annual Daily Traffic Volumes

Design Hour: N/A

Forecast Completed: October 6, 2011

Project Description

Project ID: 3080-00-09
Location: CTH N (Dane) to STH 26 (Jefferson)
Route: USH 12
Region/County: SW / Dane & Jefferson

Turning Movement Data

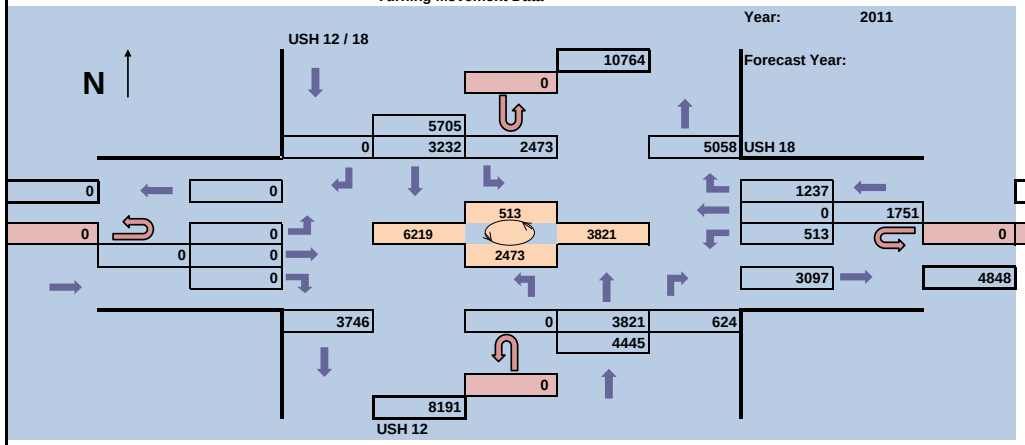

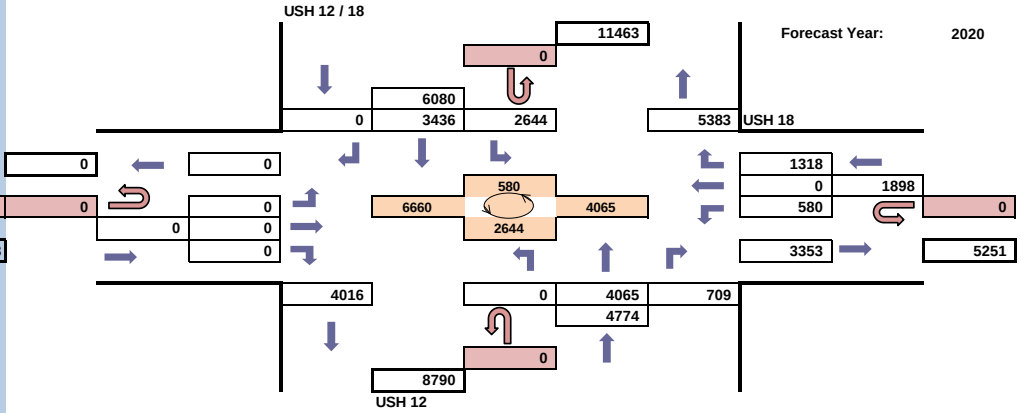

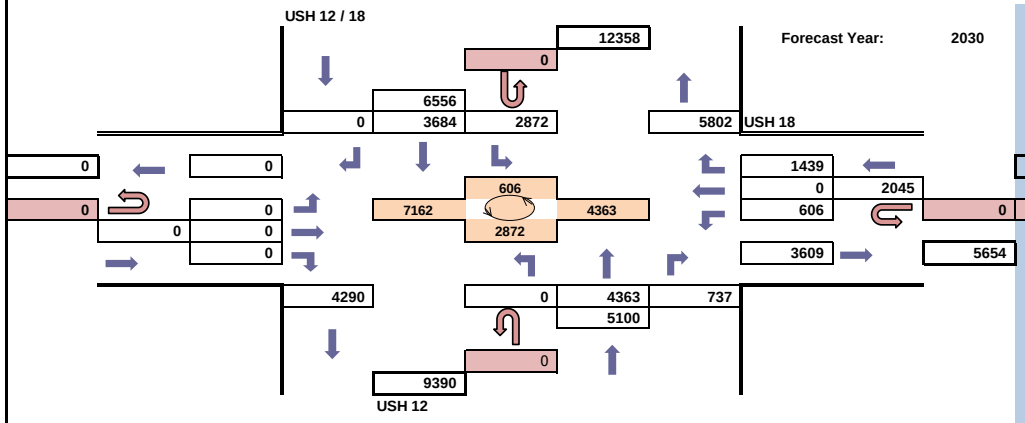

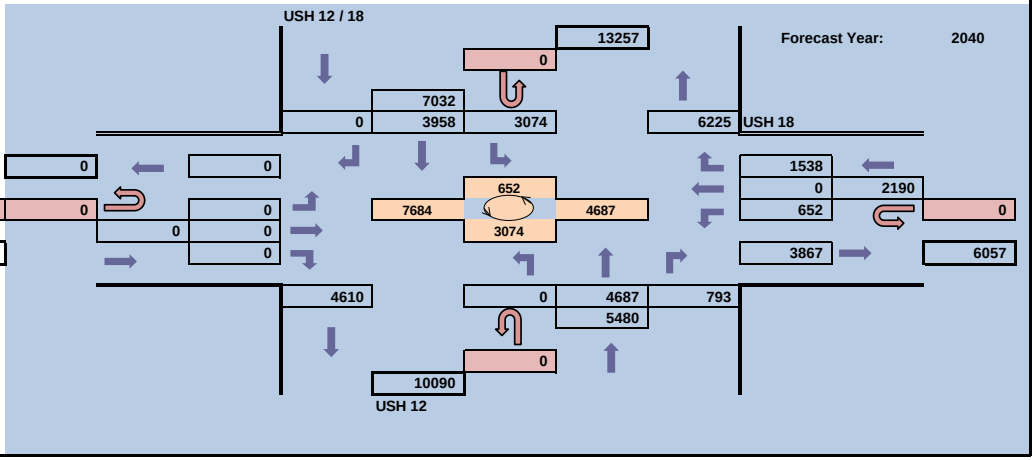

WisDot Bureau of Planning
Traffic Forecasting Section
Forecast by: Jennifer Hill
Phone: 608-266-3322
Email: Jennifer.Hill@dot.wi.gov

Projected AM Design Hour Traffic Volumes

Design Hour: 7:00 - 8:00

Forecast Completed: October 6, 2011

Project Description

Project ID: 3080-00-09
Location: CTH N (Dane) to STH 26 (Jefferson)
Route: USH 12
Region/County: SW / Dane & Jefferson

Design Hour Turning Movement Data

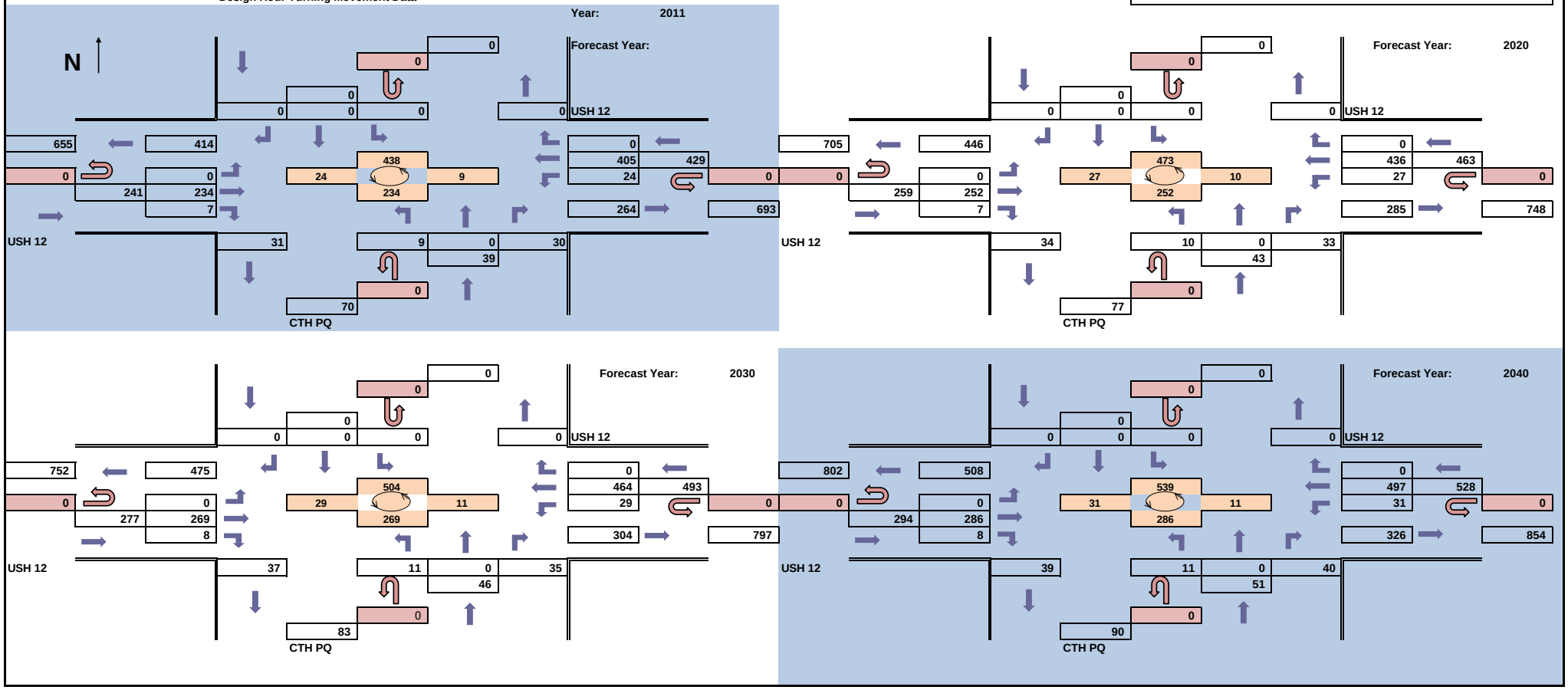

WisDot Bureau of Planning

Traffic Forecasting Section
Forecast by: Jennifer Hill
Phone: 608-266-3322
Email: Jennifer.Hill@dot.wi.gov

Projected PM Design Hour Traffic Volumes

Design Hour: 4:30 - 5:30

Forecast Completed: October 6, 2011

Project Description

Project ID: 3080-00-09
Location: CTH N (Dane) to STH 26 (Jefferson)
Route: USH 12
Region/County: SW / Dane & Jefferson

Design Hour Turning Movement Data

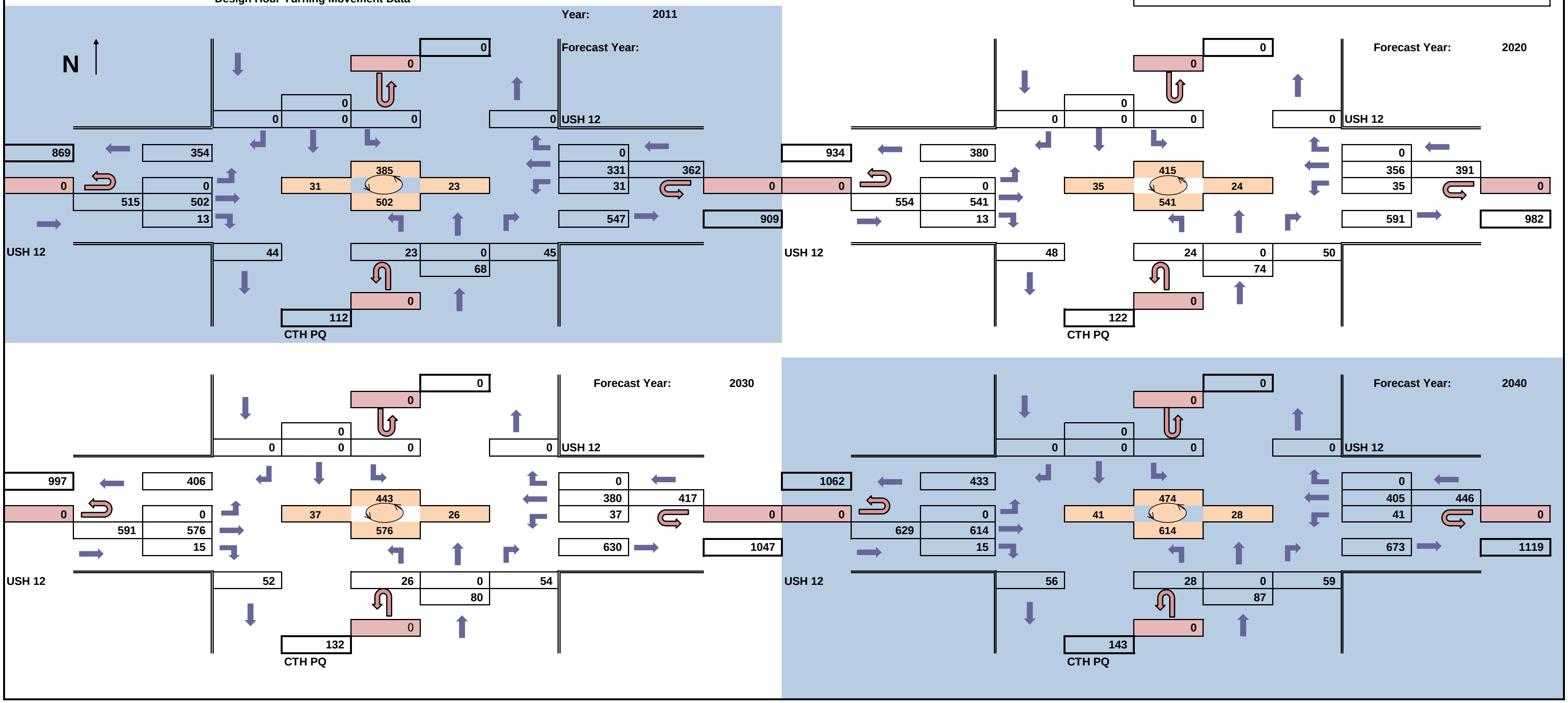

WisDot Bureau of Planning

Traffic Forecasting Section
Forecast by: Jennifer Hill
Phone: 608-266-3322
Email: Jennifer.Hill@dot.wi.gov

Projected Average Annual Daily Traffic Volumes

Design Hour: N/A

Forecast Completed: October 6, 2011

Project Description

Project ID: 3080-00-09
Location: CTH N (Dane) to STH 26 (Jefferson)
Route: USH 12
Region/County: SW / Dane & Jefferson

Turning Movement Data

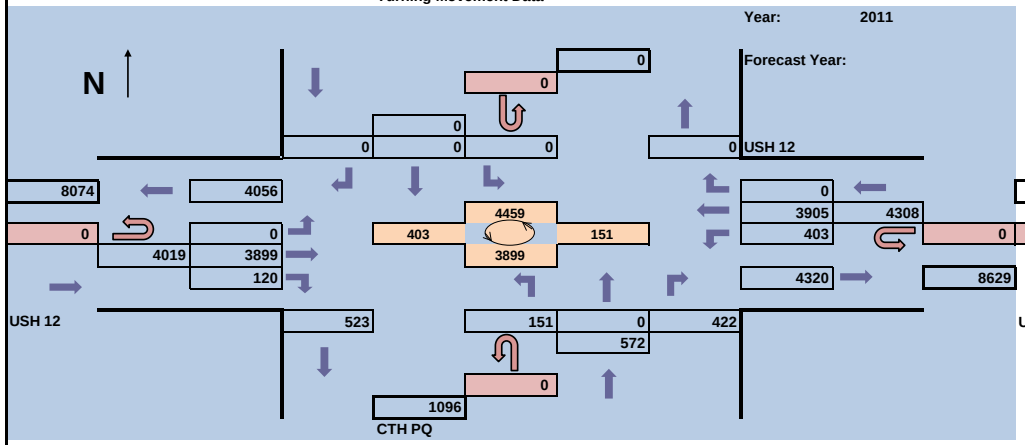

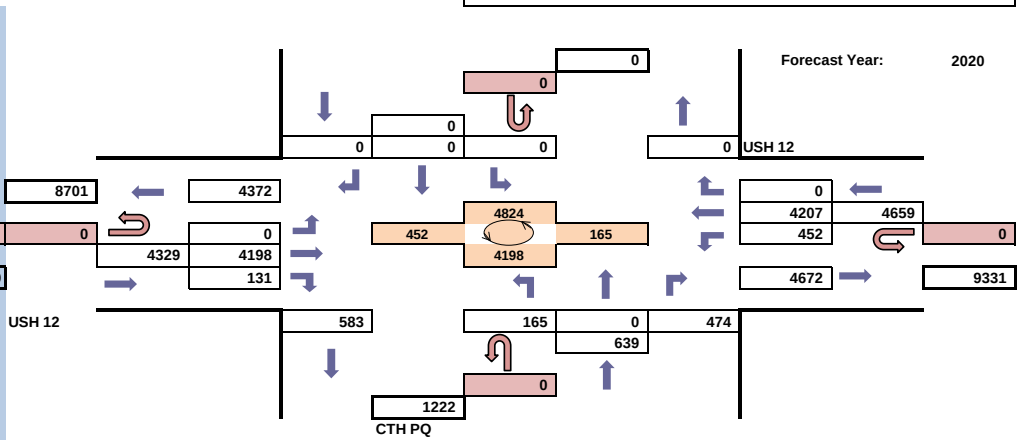

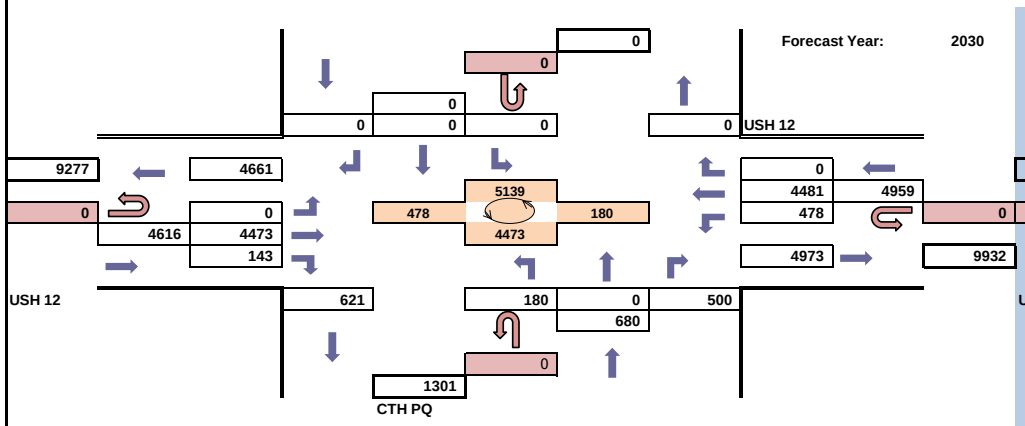

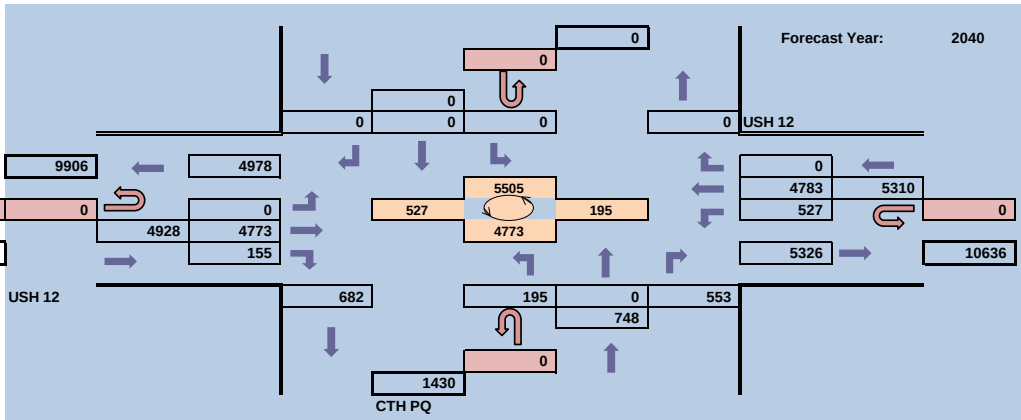

Projected AM Design Hour Traffic Volumes

WisDot Bureau of Planning
Traffic Forecasting Section
Forecast by: Jennifer Hill
Phone: 608-266-3322
Email: Jennifer.Hill@dot.wi.gov

Design Hour: 7:00 - 8:00

Forecast Completed: October 6, 2011

Project Description

Project ID: 3080-00-09
Location: CTH N (Dane) to STH 26 (Jefferson)
Route: USH 12
Region/County: SW / Dane & Jefferson

Design Hour Turning Movement Data

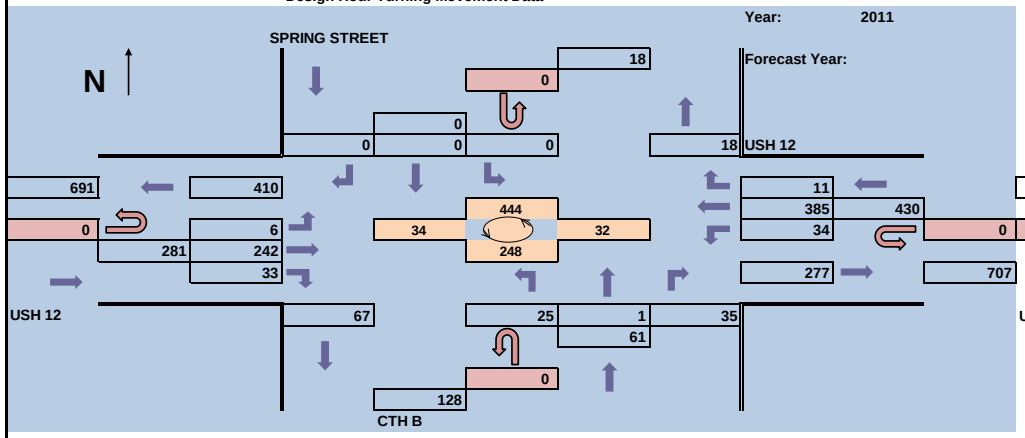

WisDot Bureau of Planning

Traffic Forecasting Section
Forecast by: Jennifer Hill
Phone: 608-266-3322
Email: Jennifer.Hill@dot.wi.gov

Projected PM Design Hour Traffic Volumes

Design Hour: 4:30 - 5:30

Forecast Completed: October 6, 2011

Project Description

Project ID: 3080-00-09
Location: CTH N (Dane) to STH 26 (Jefferson)
Route: USH 12
Region/County: SW / Dane & Jefferson

Design Hour Turning Movement Data

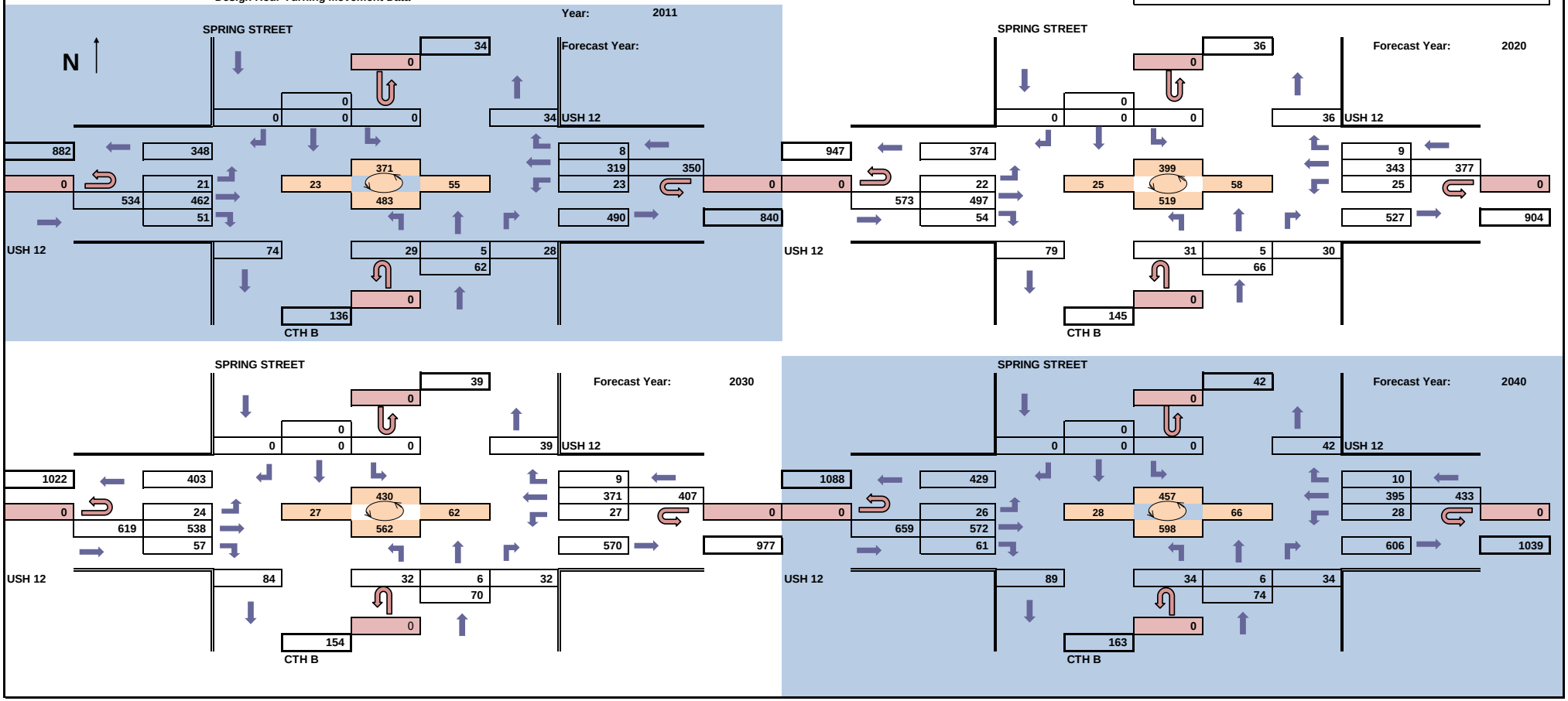

WisDot Bureau of Planning

Traffic Forecasting Section
Forecast by: Jennifer Hill
Phone: 608-266-3322
Email: Jennifer.Hill@dot.wi.gov

Projected Average Annual Daily Traffic Volumes

Design Hour: N/A

Forecast Completed: October 6, 2011

Project Description

Project ID: 3080-00-09
Location: CTH N (Dane) to STH 26 (Jefferson)
Route: USH 12
Region/County: SW / Dane & Jefferson

Turning Movement Data

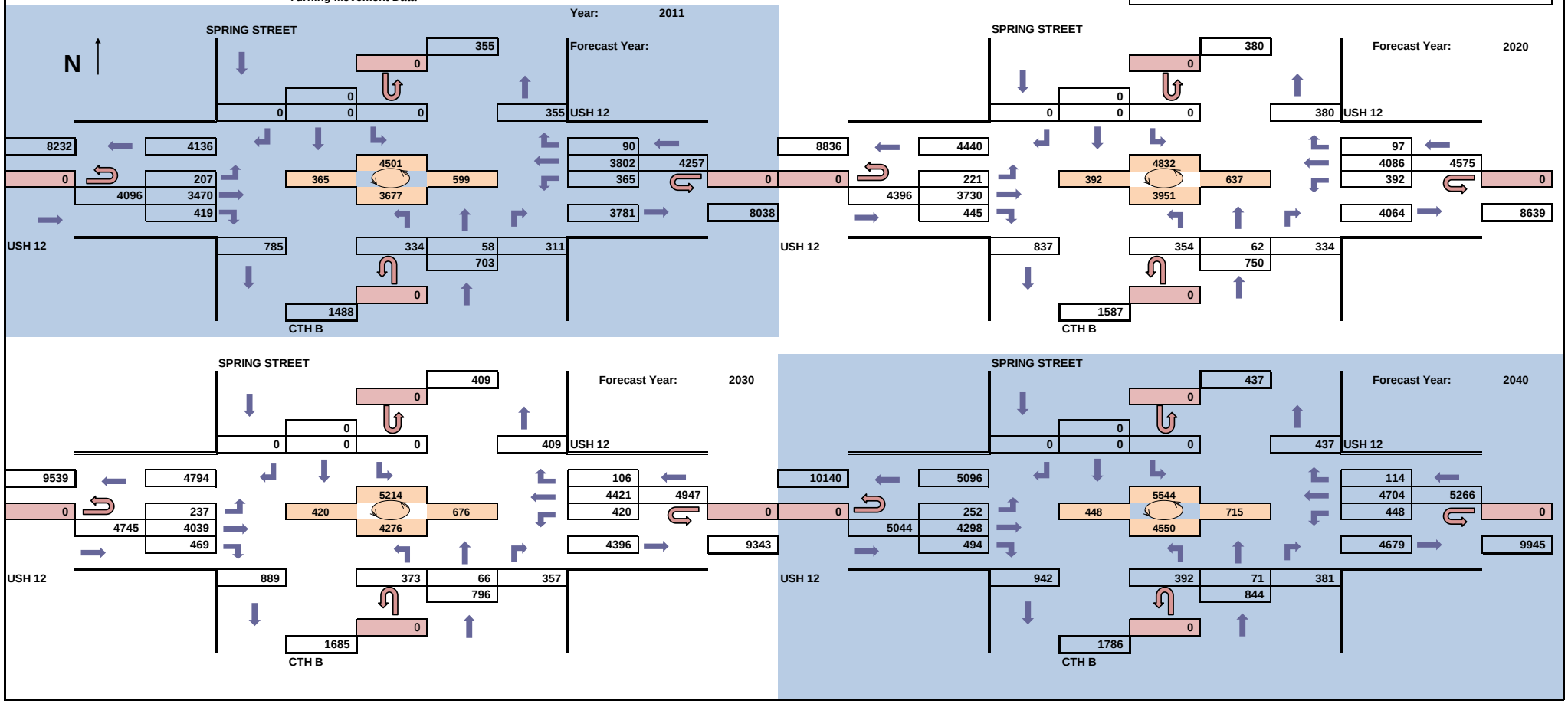

WisDot Bureau of Planning
Traffic Forecasting Section
Forecast by: Jennifer Hill
Phone: 608-266-3322
Email: Jennifer.Hill@dot.wi.gov

Projected AM Design Hour Traffic Volumes

Design Hour: 7:00 - 8:00

Forecast Completed: October 6, 2011

Project Description

Project ID: 3080-00-09
Location: CTH N (Dane) to STH 26 (Jefferson)
Route: USH 12
Region/County: SW / Dane & Jefferson

Design Hour Turning Movement Data

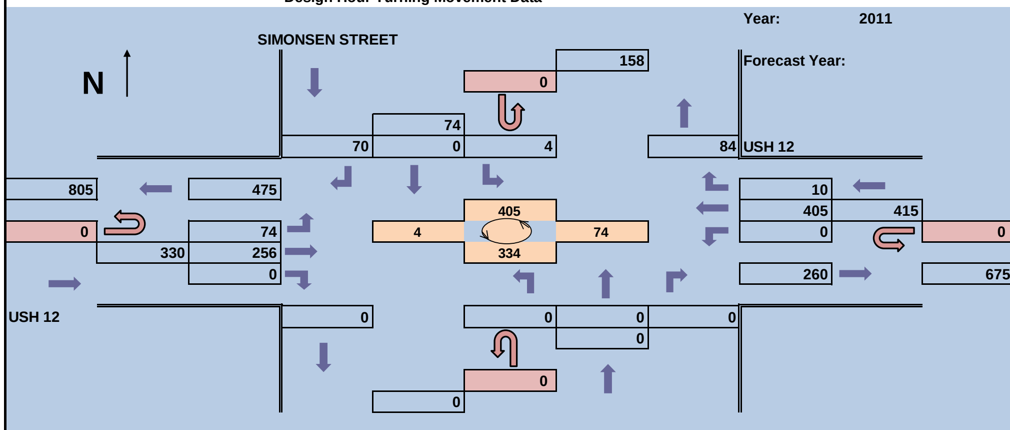

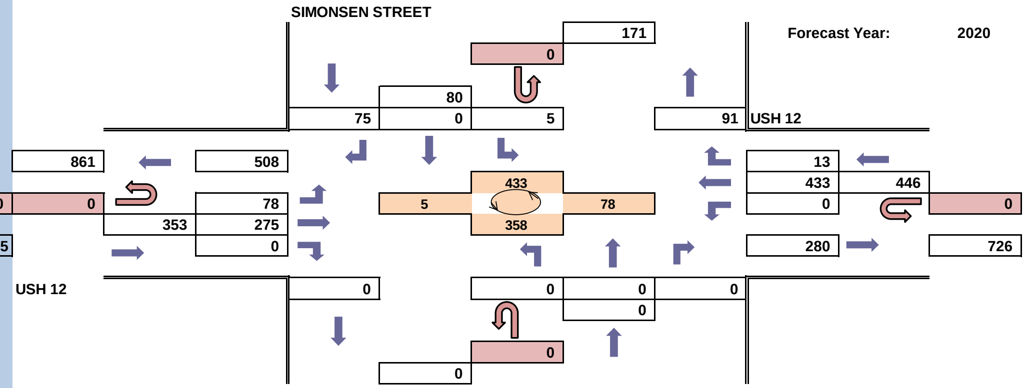

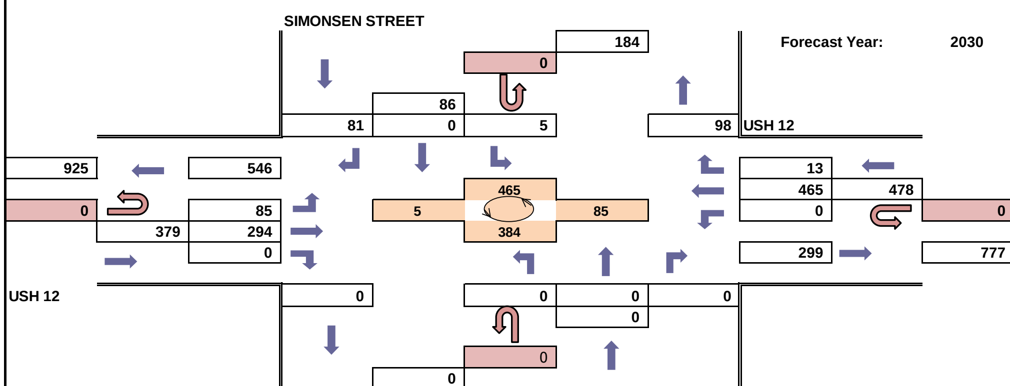

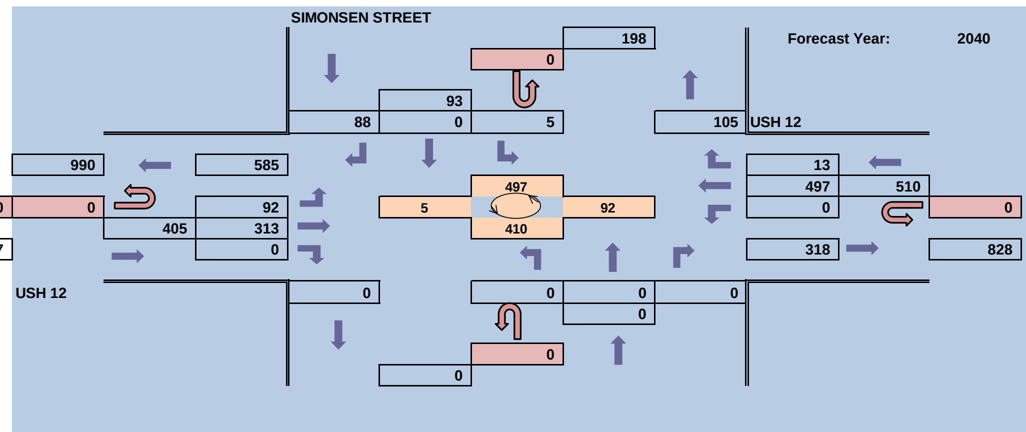

WisDot Bureau of Planning

Traffic Forecasting Section
Forecast by: Jennifer Hill
Phone: 608-266-3322
Email: Jennifer.Hill@dot.wi.gov

Projected PM Design Hour Traffic Volumes

Design Hour: 4:30 - 5:30

Forecast Completed: October 6, 2011

Project Description

Project ID: 3080-00-09
Location: CTH N (Dane) to STH 26 (Jefferson)
Route: USH 12
Region/County: SW / Dane & Jefferson

Design Hour Turning Movement Data

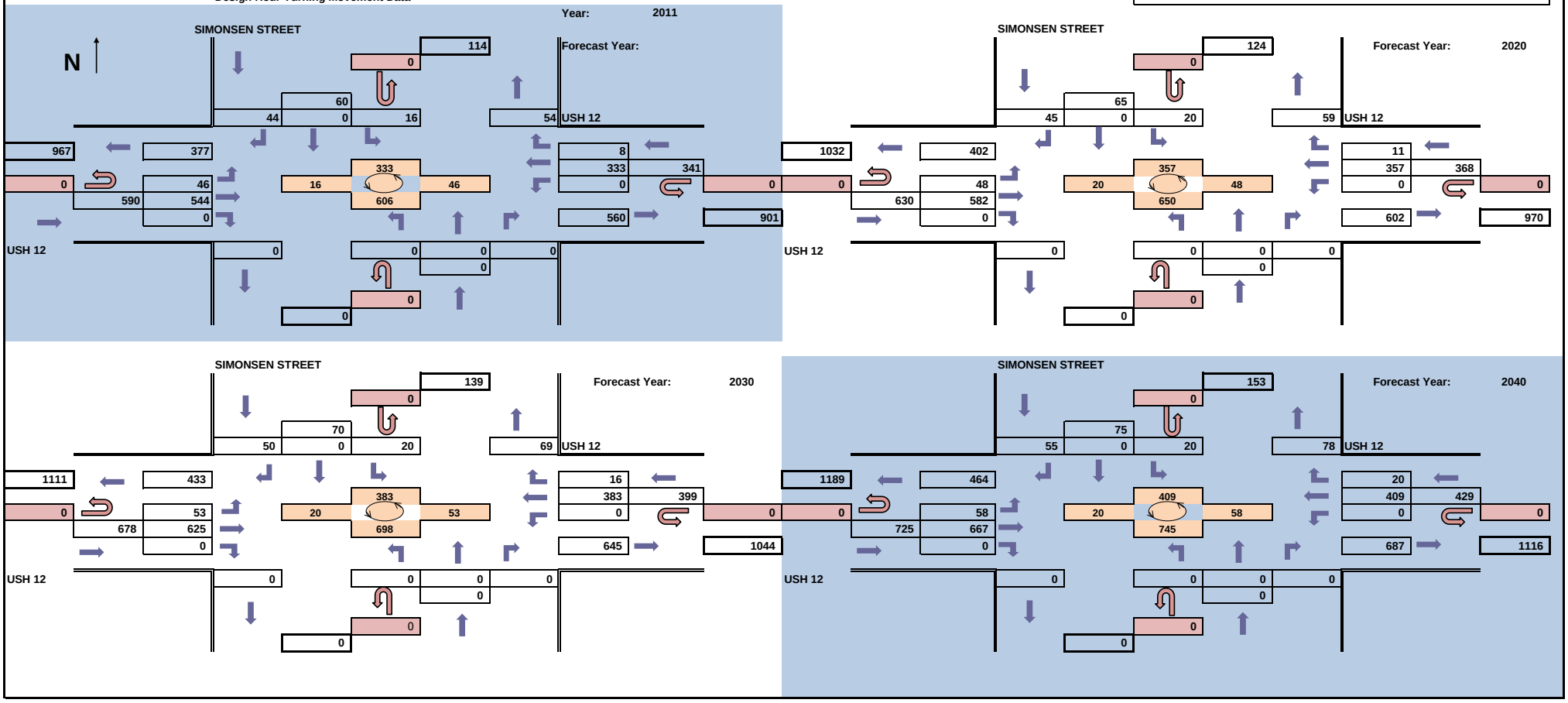

WisDot Bureau of Planning

Traffic Forecasting Section
Forecast by: Jennifer Hill
Phone: 608-266-3322
Email: Jennifer.Hill@dot.wi.gov

Projected Average Annual Daily Traffic Volumes

Design Hour: N/A

Forecast Completed: October 6, 2011

Project Description

Project ID: 3080-00-09
Location: CTH N (Dane) to STH 26 (Jefferson)
Route: USH 12
Region/County: SW / Dane & Jefferson

Turning Movement Data

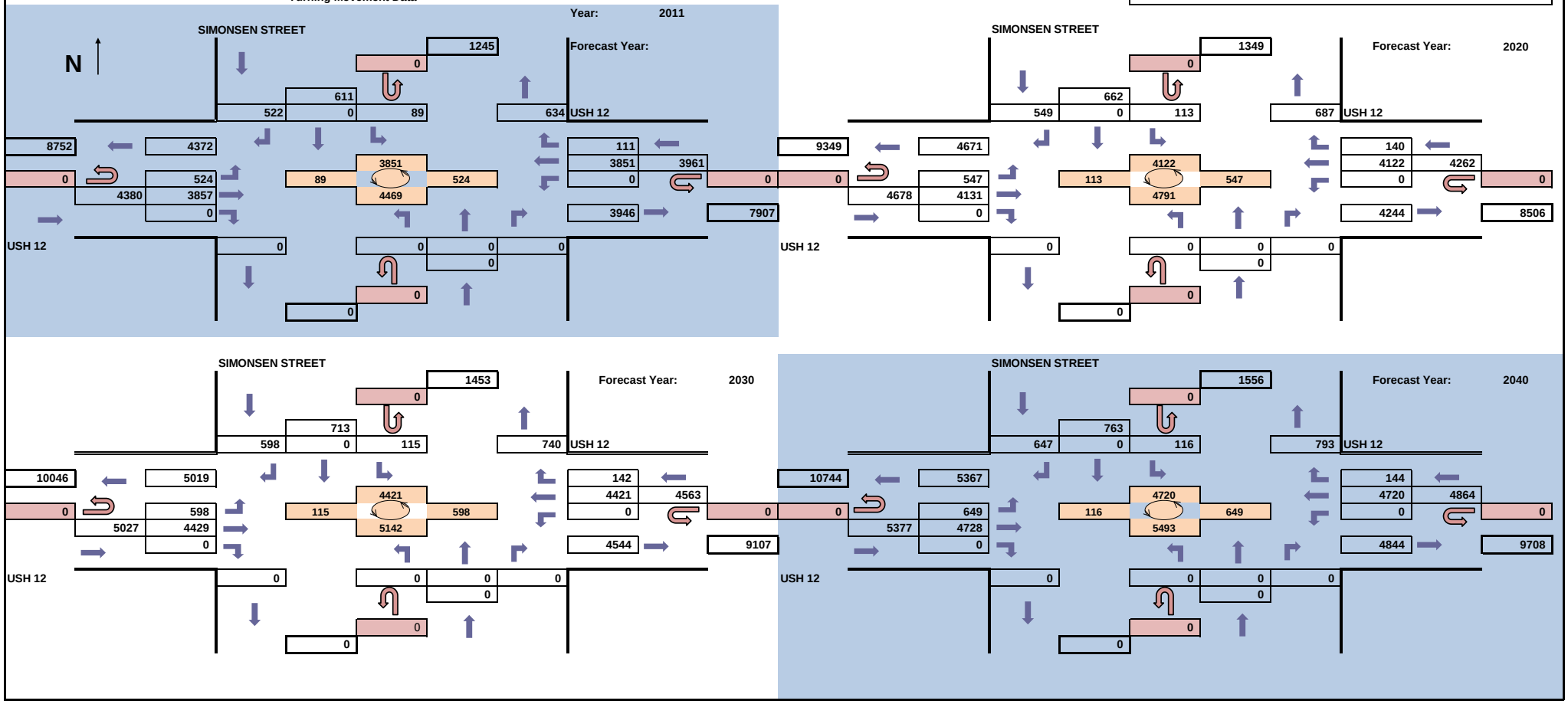

WisDot Bureau of Planning
Traffic Forecasting Section
Forecast by: Jennifer Hill
Phone: 608-266-3322
Email: Jennifer.Hill@dot.wi.gov

Projected AM Design Hour Traffic Volumes

Design Hour: 7:00 - 8:00

Forecast Completed: October 6, 2011

Project Description

Project ID: 3080-00-09
Location: CTH N (Dane) to STH 26 (Jefferson)
Route: USH 12
Region/County: SW / Dane & Jefferson

Design Hour Turning Movement Data

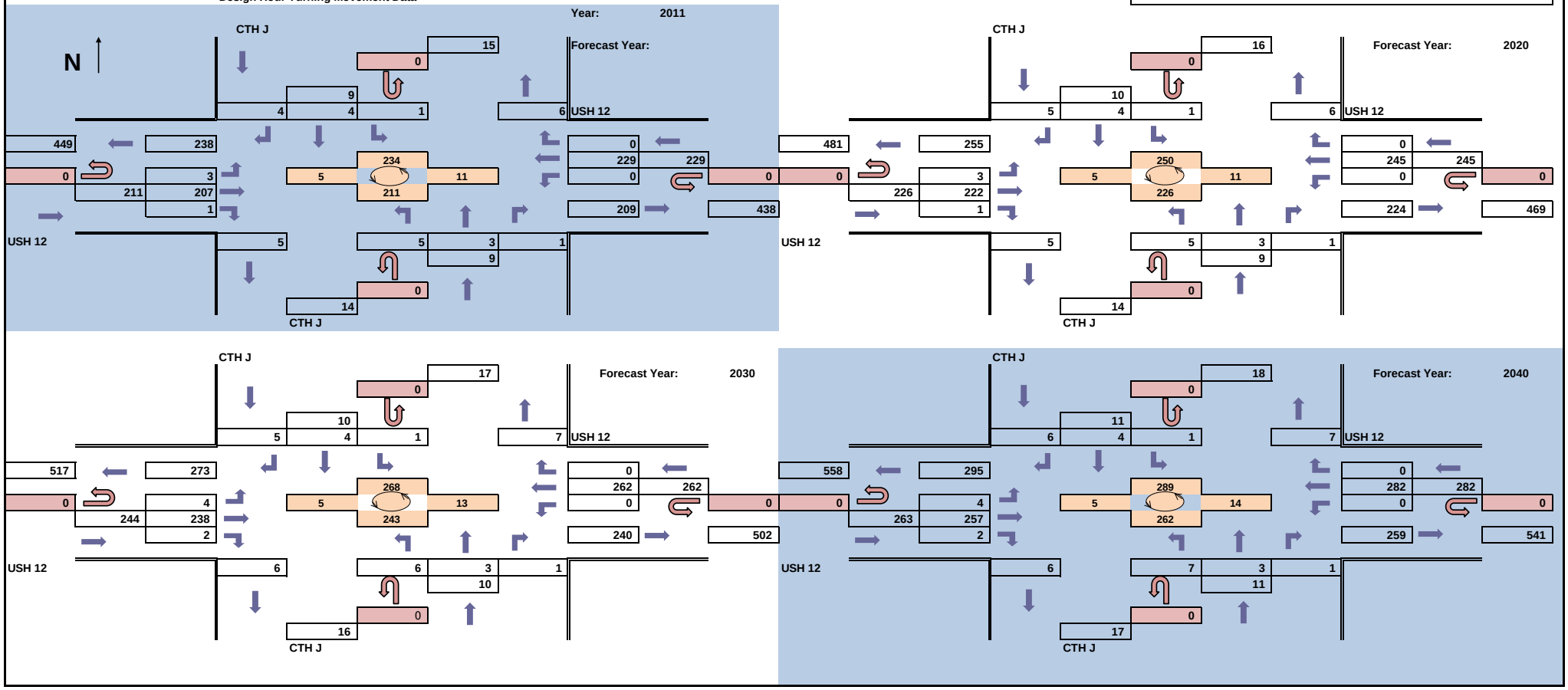

WisDot Bureau of Planning

Traffic Forecasting Section
Forecast by: Jennifer Hill
Phone: 608-266-3322
Email: Jennifer.Hill@dot.wi.gov

Projected PM Design Hour Traffic Volumes

Design Hour: 4:30 - 5:30

Forecast Completed: October 6, 2011

Project Description

Project ID: 3080-00-09
Location: CTH N (Dane) to STH 26 (Jefferson)
Route: USH 12
Region/County: SW / Dane & Jefferson

Design Hour Turning Movement Data

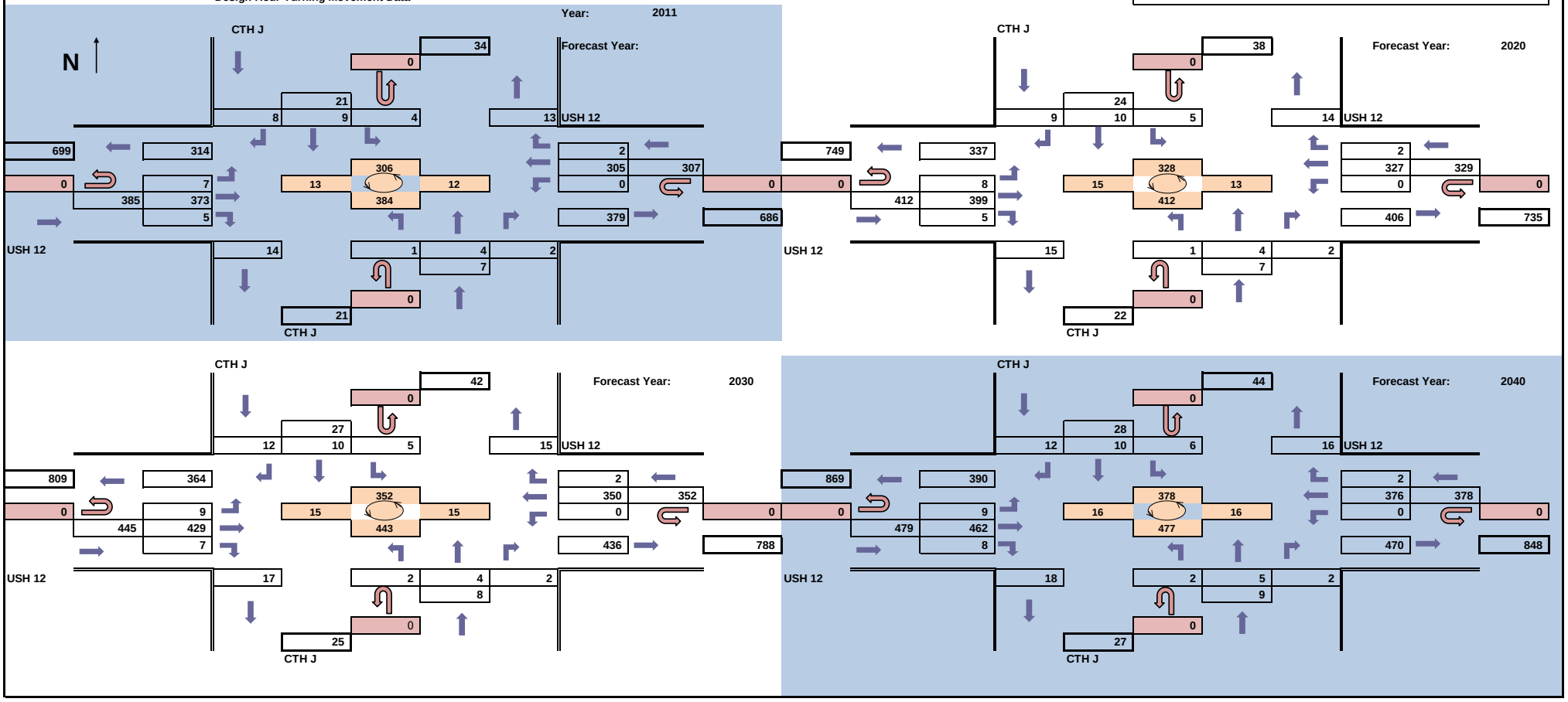

WisDot Bureau of Planning

Traffic Forecasting Section
Forecast by: Jennifer Hill
Phone: 608-266-3322
Email: Jennifer.Hill@dot.wi.gov

Projected Average Annual Daily Traffic Volumes

Design Hour: N/A

Forecast Completed: October 6, 2011

Project Description

Project ID: 3080-00-09
Location: CTH N (Dane) to STH 26 (Jefferson)
Route: USH 12
Region/County: SW / Dane & Jefferson

Turning Movement Data

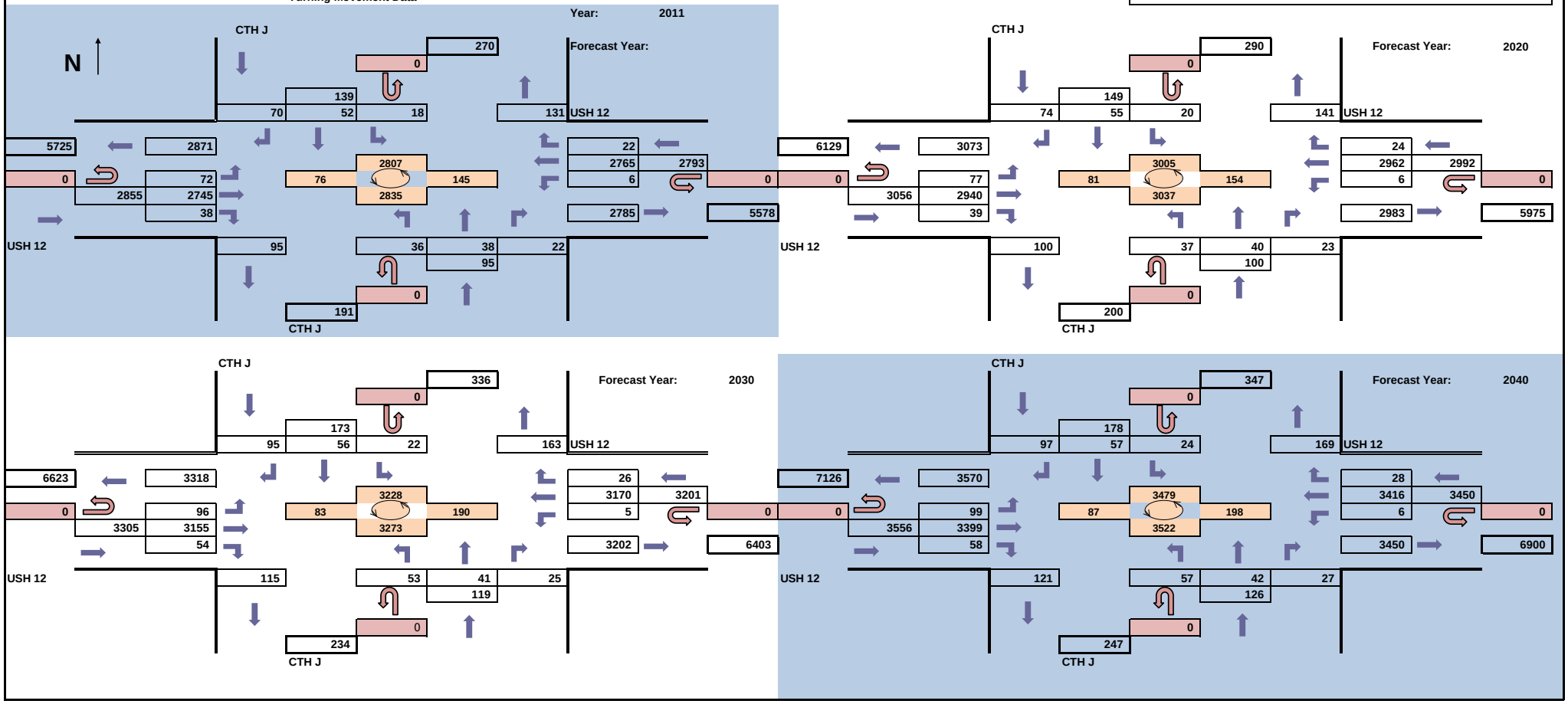

Projected AM Design Hour Traffic Volumes

WisDot Bureau of Planning
Traffic Forecasting Section
Forecast by: Jennifer Hill
Phone: 608-266-3322
Email: Jennifer.Hill@dot.wi.gov

Design Hour: 7:00 - 8:00

Forecast Completed: October 6, 2011

Project Description

Project ID: 3080-00-09
Location: CTH N (Dane) to STH 26 (Jefferson)
Route: USH 12
Region/County: SW / Dane & Jefferson

Design Hour Turning Movement Data

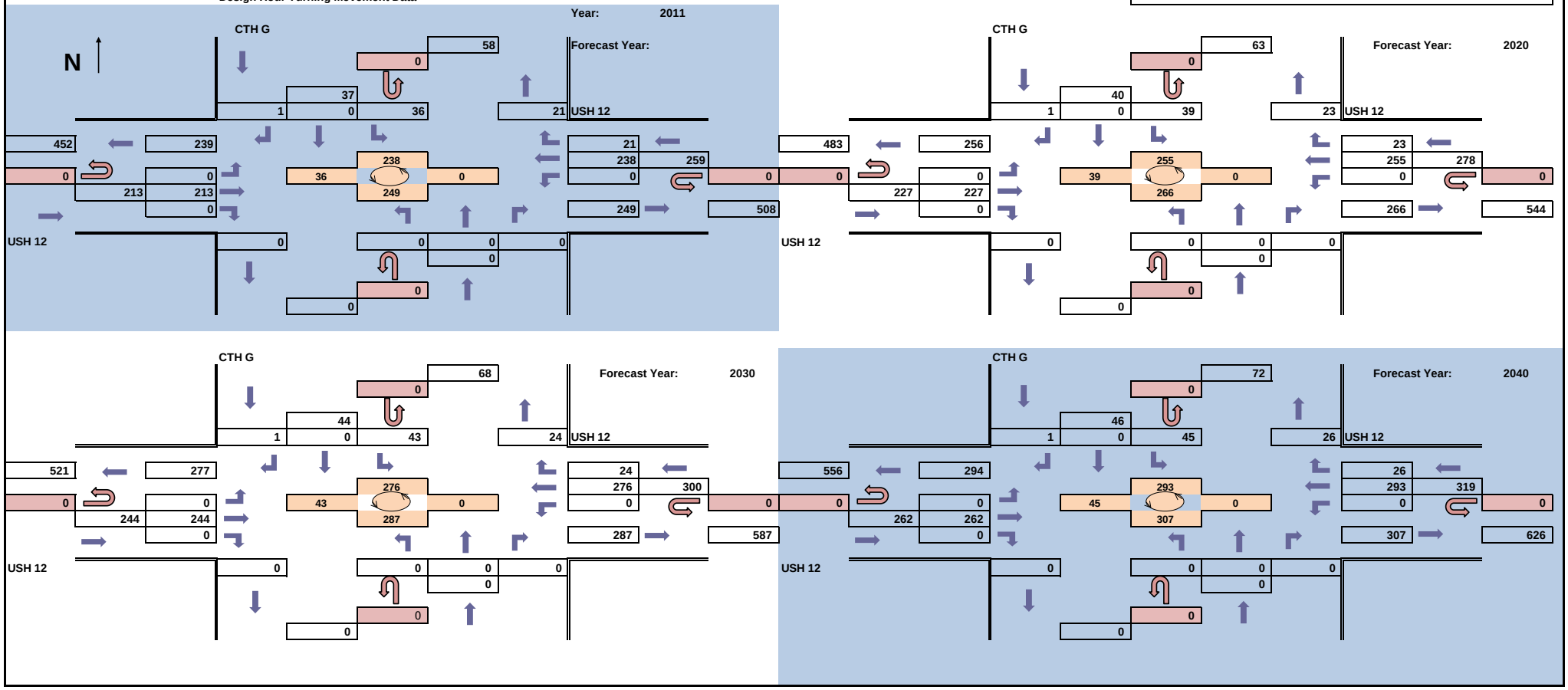

WisDot Bureau of Planning

Traffic Forecasting Section
Forecast by: Jennifer Hill
Phone: 608-266-3322
Email: Jennifer.Hill@dot.wi.gov

Projected PM Design Hour Traffic Volumes

Design Hour: 4:30 - 5:30

Forecast Completed: October 6, 2011

Project Description

Project ID: 3080-00-09
Location: CTH N (Dane) to STH 26 (Jefferson)
Route: USH 12
Region/County: SW / Dane & Jefferson

Design Hour Turning Movement Data

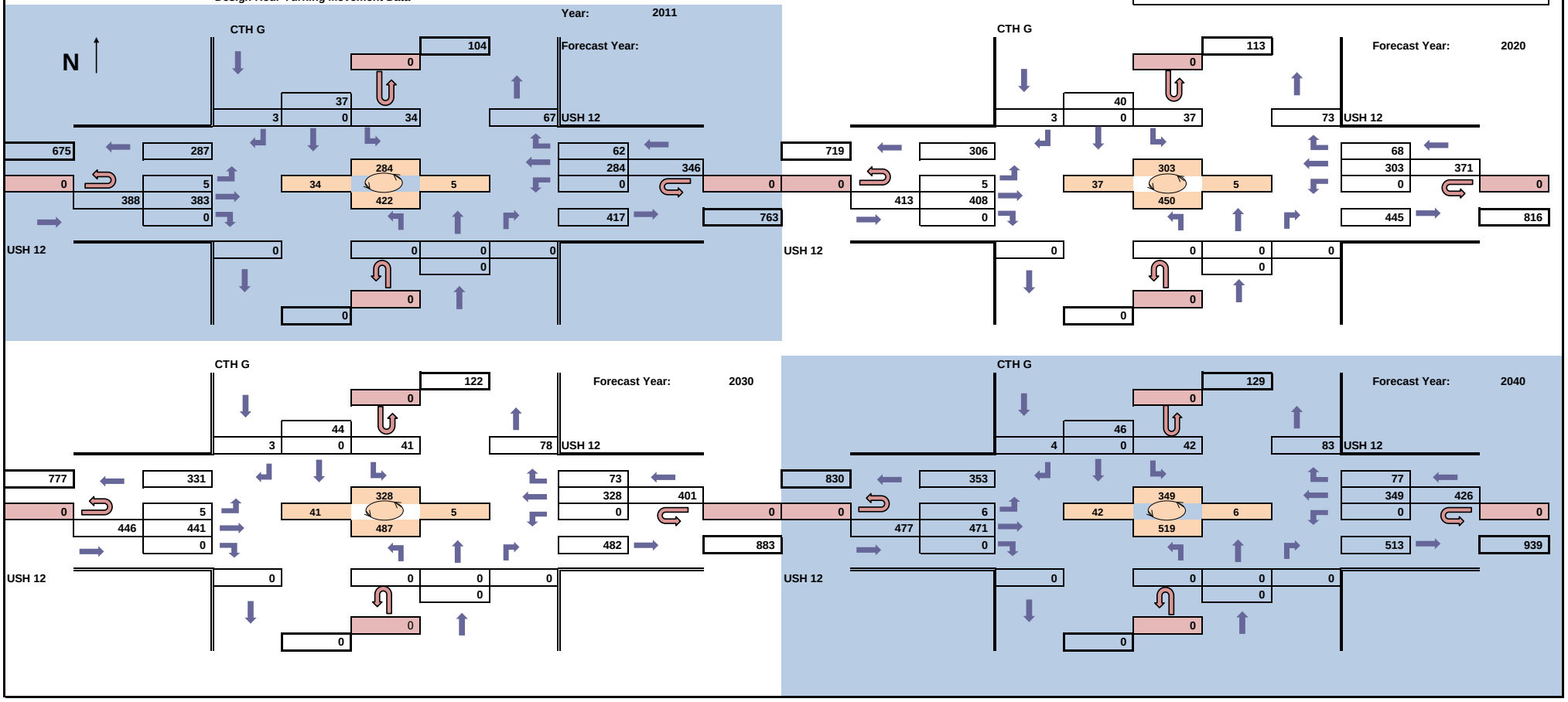

WisDot Bureau of Planning

Traffic Forecasting Section
Forecast by: Jennifer Hill
Phone: 608-266-3322
Email: Jennifer.Hill@dot.wi.gov

Projected Average Annual Daily Traffic Volumes

Design Hour: N/A

Forecast Completed: October 6, 2011

Project Description

Project ID: 3080-00-09
Location: CTH N (Dane) to STH 26 (Jefferson)
Route: USH 12
Region/County: SW / Dane & Jefferson

Turning Movement Data

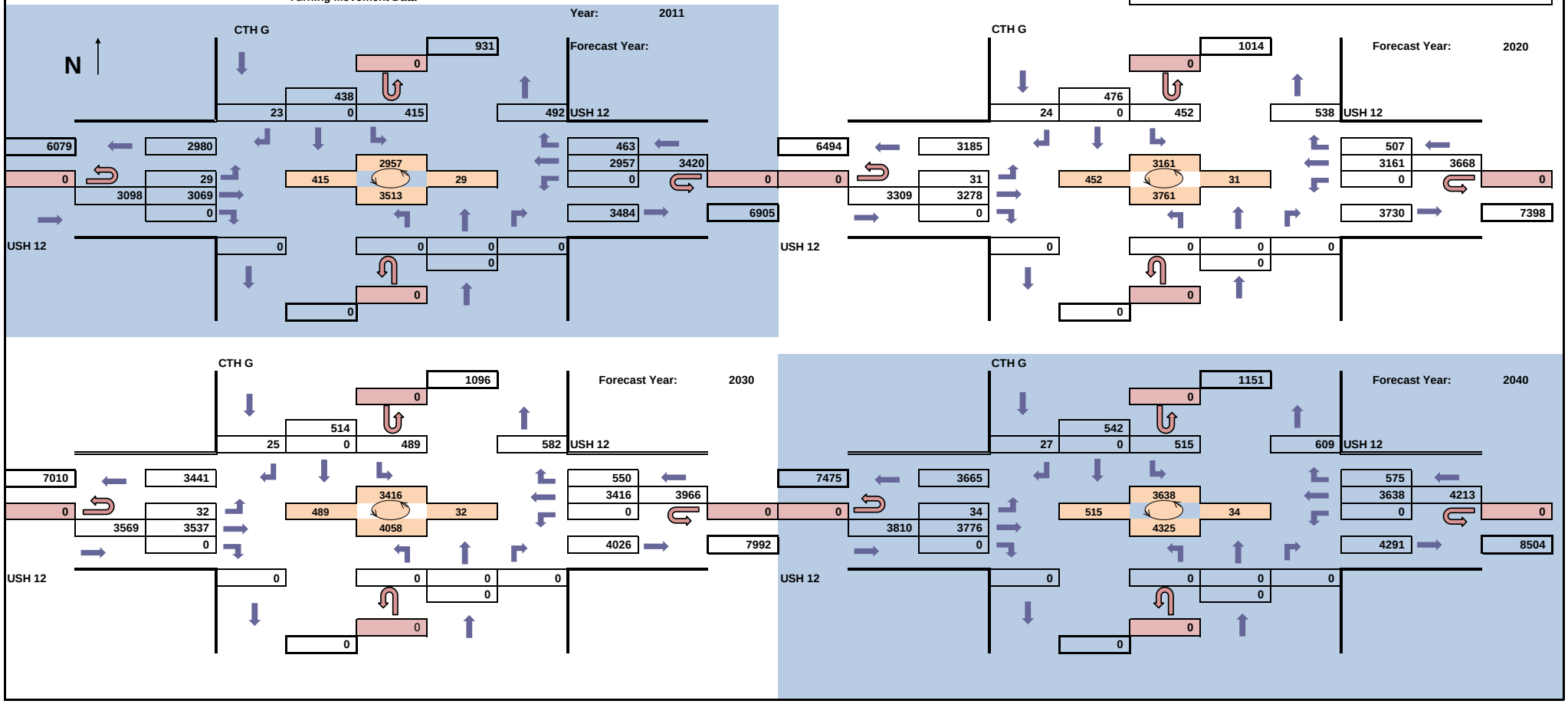

Projected AM Design Hour Traffic Volumes

WisDot Bureau of Planning
Traffic Forecasting Section
Forecast by: Jennifer Hill
Phone: 608-266-3322
Email: Jennifer.Hill@dot.wi.gov

Design Hour: 7:00 - 8:00

Forecast Completed: October 6, 2011

Project Description

Project ID: 3080-00-09
Location: CTH N (Dane) to STH 26 (Jefferson)
Route: USH 12
Region/County: SW / Dane & Jefferson

Design Hour Turning Movement Data

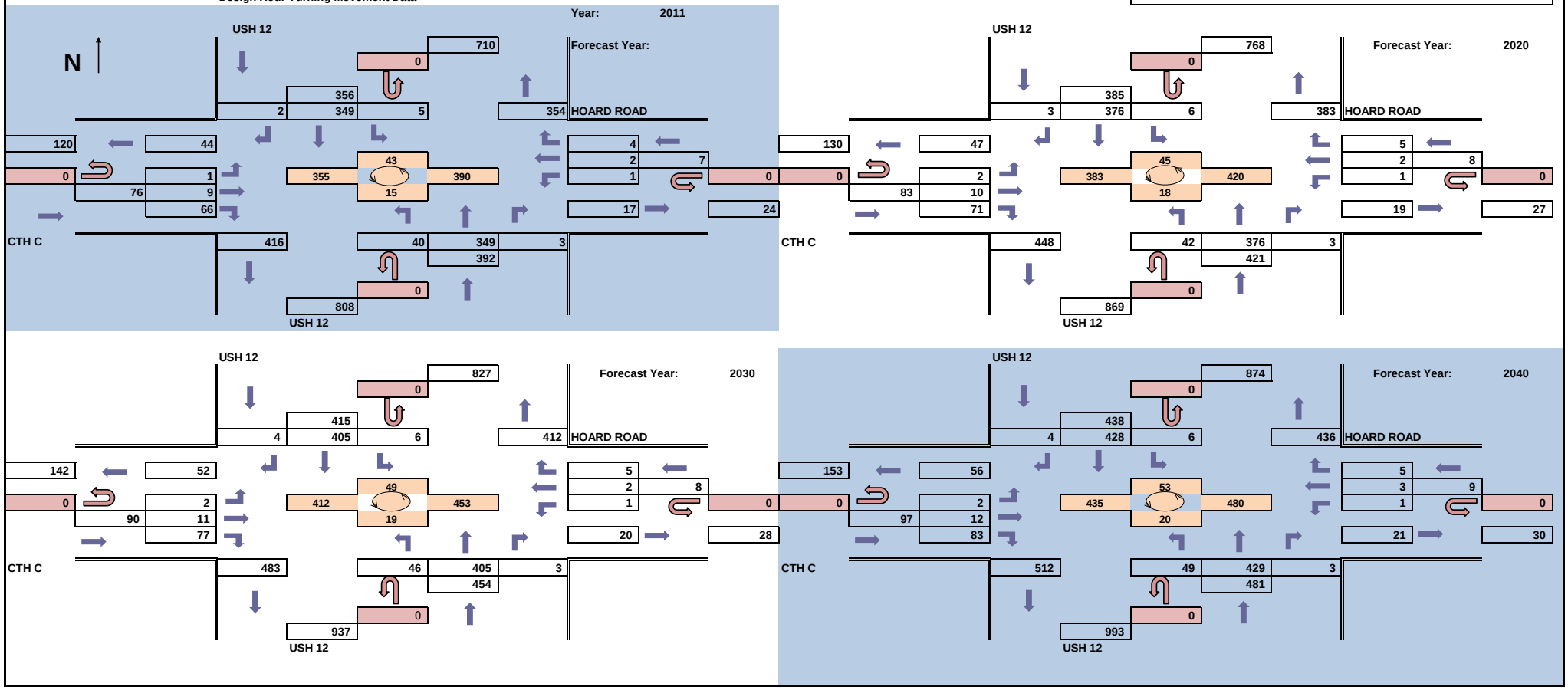

WisDot Bureau of Planning

Traffic Forecasting Section
Forecast by: Jennifer Hill
Phone: 608-266-3322
Email: Jennifer.Hill@dot.wi.gov

Projected PM Design Hour Traffic Volumes

Design Hour: 4:30 - 5:30

Forecast Completed: October 6, 2011

Project Description

Project ID: 3080-00-09
Location: CTH N (Dane) to STH 26 (Jefferson)
Route: USH 12
Region/County: SW / Dane & Jefferson

Design Hour Turning Movement Data

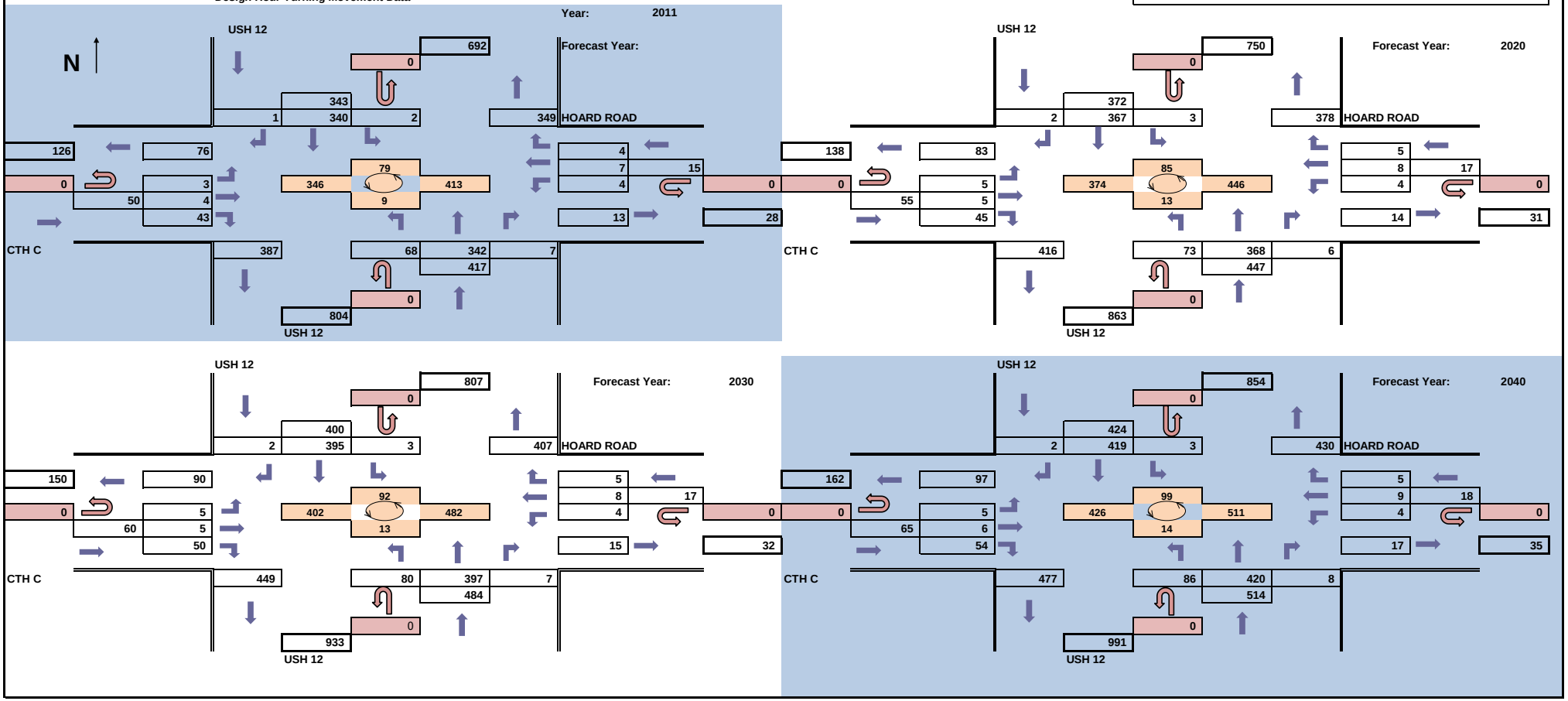

WisDot Bureau of Planning

Traffic Forecasting Section
Forecast by: Jennifer Hill
Phone: 608-266-3322
Email: Jennifer.Hill@dot.wi.gov

Projected Average Annual Daily Traffic Volumes

Design Hour: N/A

Forecast Completed: October 6, 2011

Project Description

Project ID: 3080-00-09
Location: CTH N (Dane) to STH 26 (Jefferson)
Route: USH 12
Region/County: SW / Dane & Jefferson

Turning Movement Data

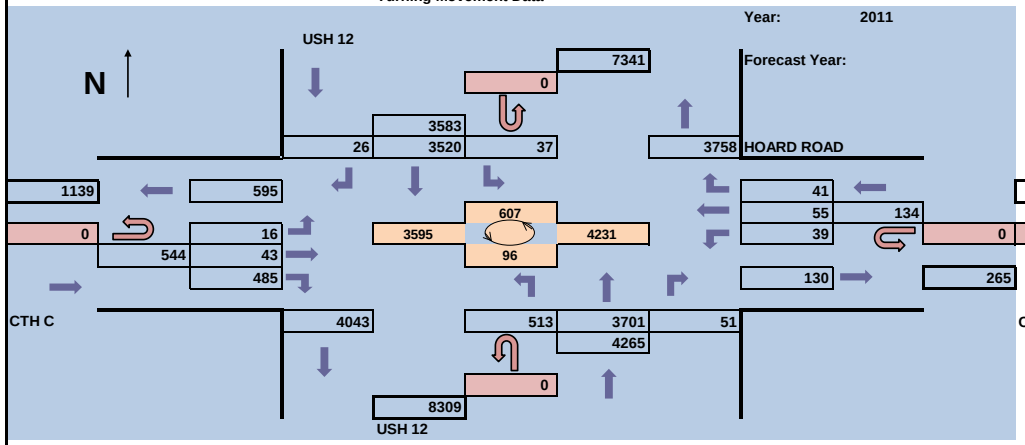

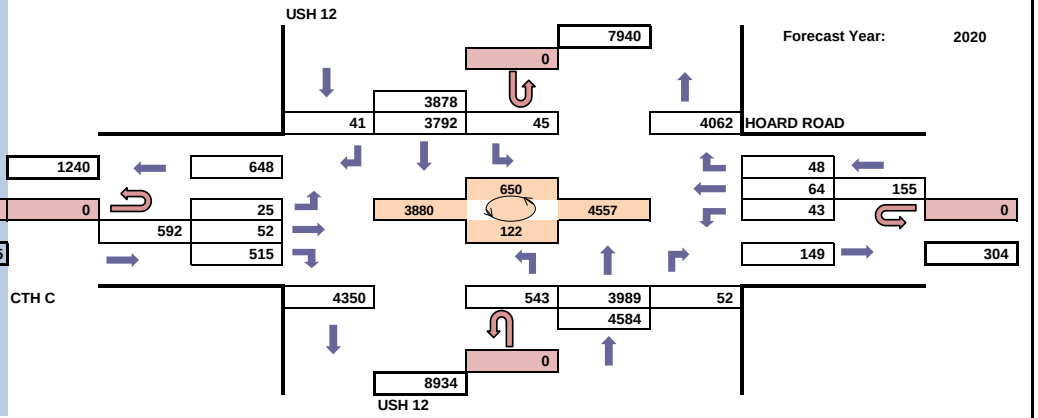

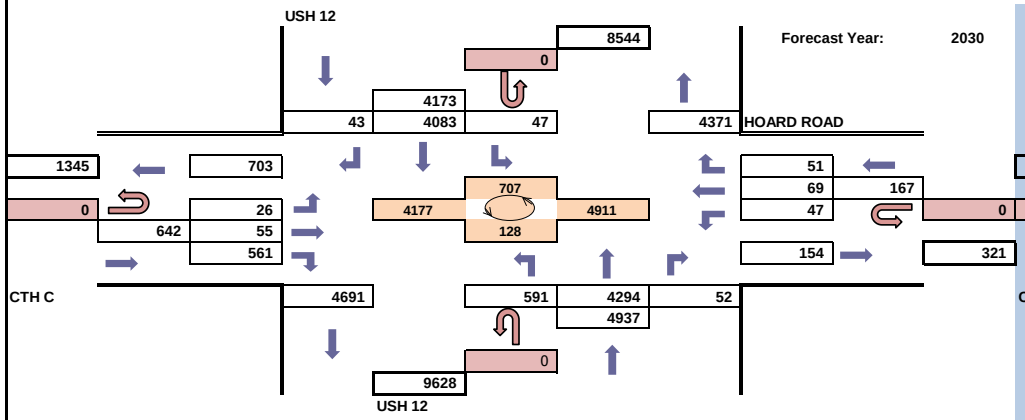

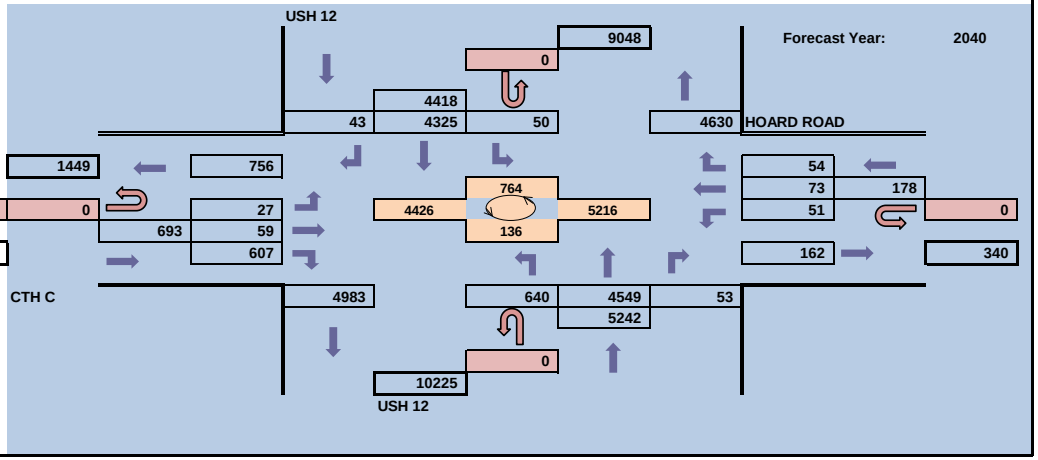

Projected AM Design Hour Traffic Volumes

WisDot Bureau of Planning
Traffic Forecasting Section
Forecast by: Jennifer Hill
Phone: 608-266-3322
Email: Jennifer.Hill@dot.wi.gov

Design Hour: 7:00 - 8:00

Forecast Completed: October 6, 2011

Project Description

Project ID: 3080-00-09
Location: CTH N (Dane) to STH 26 (Jefferson)
Route: USH 12
Region/County: SW / Dane & Jefferson

Design Hour Turning Movement Data

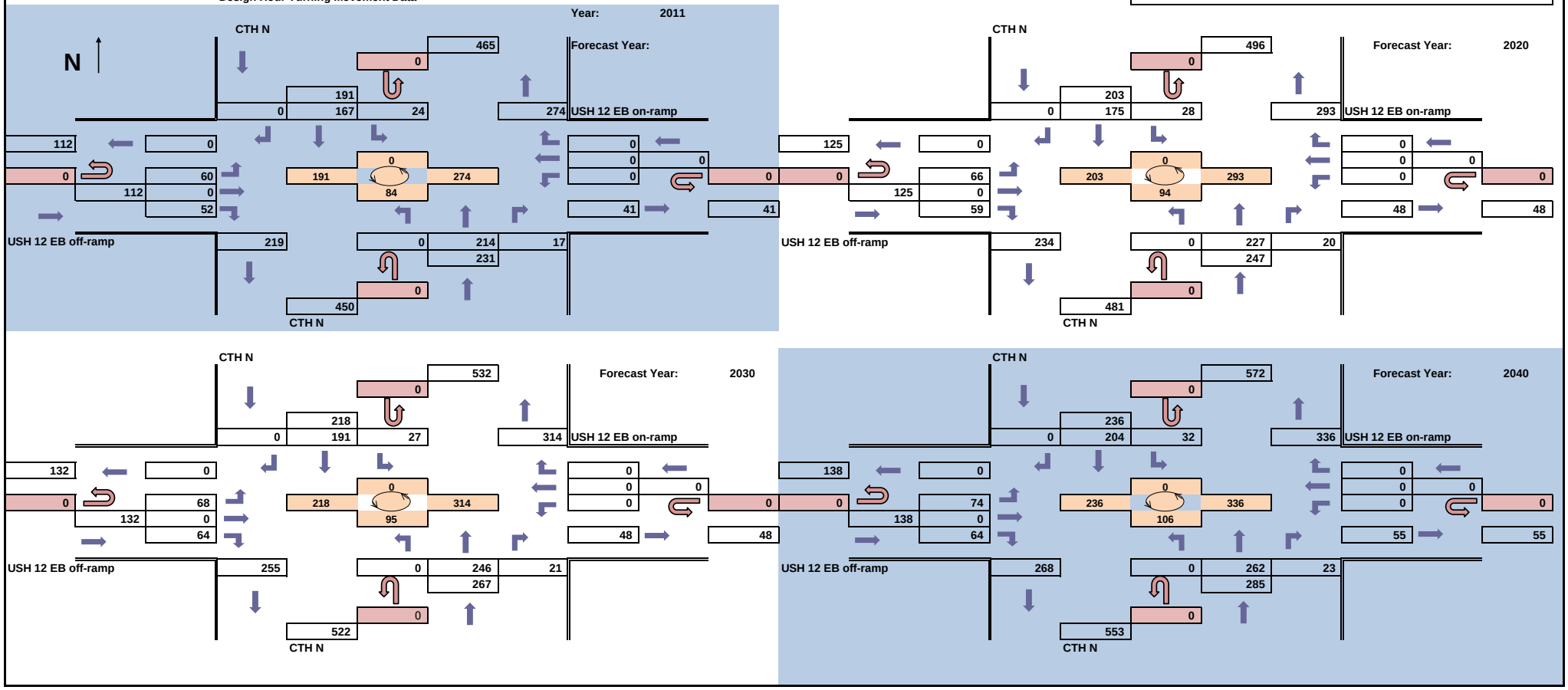

WisDot Bureau of Planning

Traffic Forecasting Section
Forecast by: Jennifer Hill
Phone: 608-266-3322
Email: Jennifer.Hill@dot.wi.gov

Projected PM Design Hour Traffic Volumes

Design Hour: 4:30 - 5:30

Forecast Completed: October 6, 2011

Project Description

Project ID: 3080-00-09
Location: CTH N (Dane) to STH 26 (Jefferson)
Route: USH 12
Region/County: SW / Dane & Jefferson

Design Hour Turning Movement Data

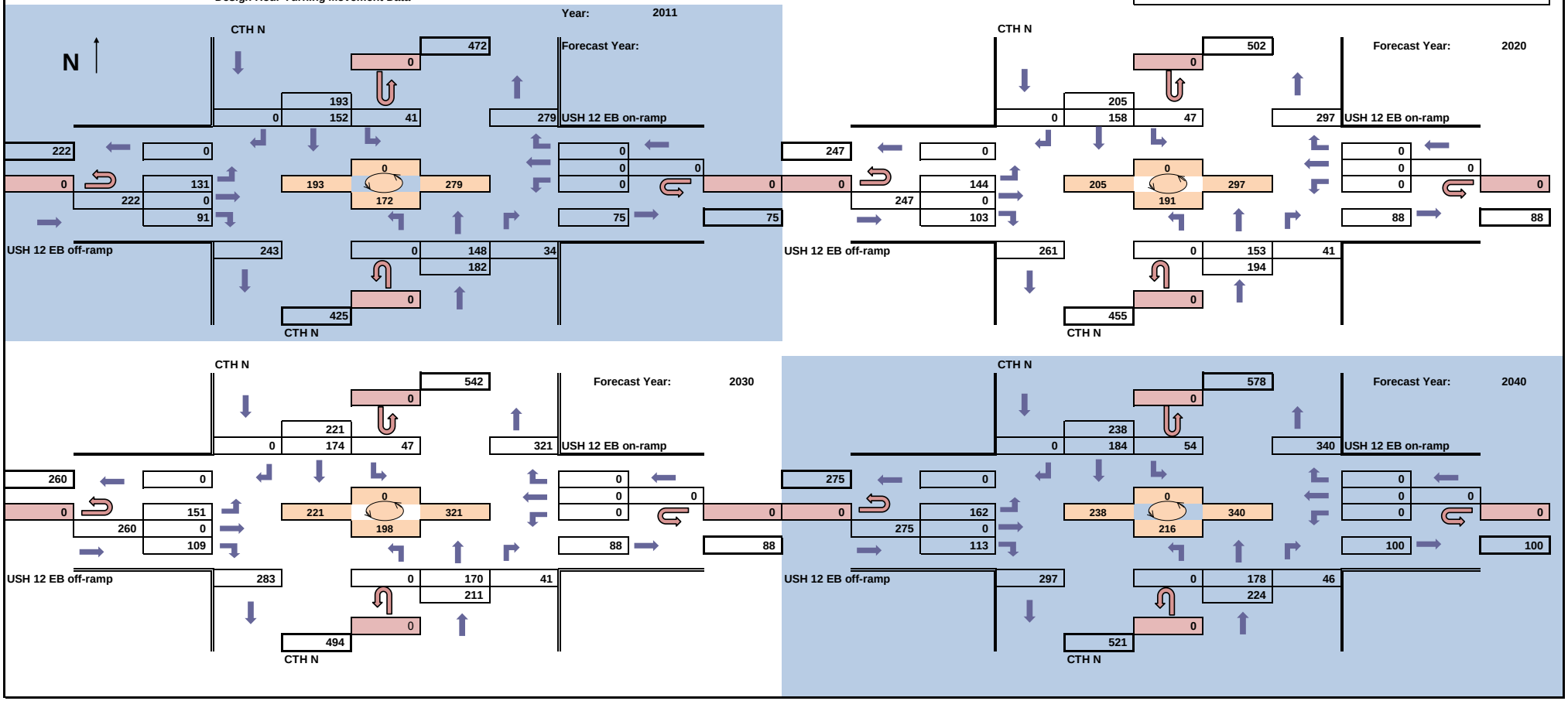

WisDot Bureau of Planning

Traffic Forecasting Section
Forecast by: Jennifer Hill
Phone: 608-266-3322
Email: Jennifer.Hill@dot.wi.gov

Projected Average Annual Daily Traffic Volumes

Design Hour: N/A

Forecast Completed: October 6, 2011

Project Description

Project ID: 3080-00-09
Location: CTH N (Dane) to STH 26 (Jefferson)
Route: USH 12
Region/County: SW / Dane & Jefferson

Turning Movement Data

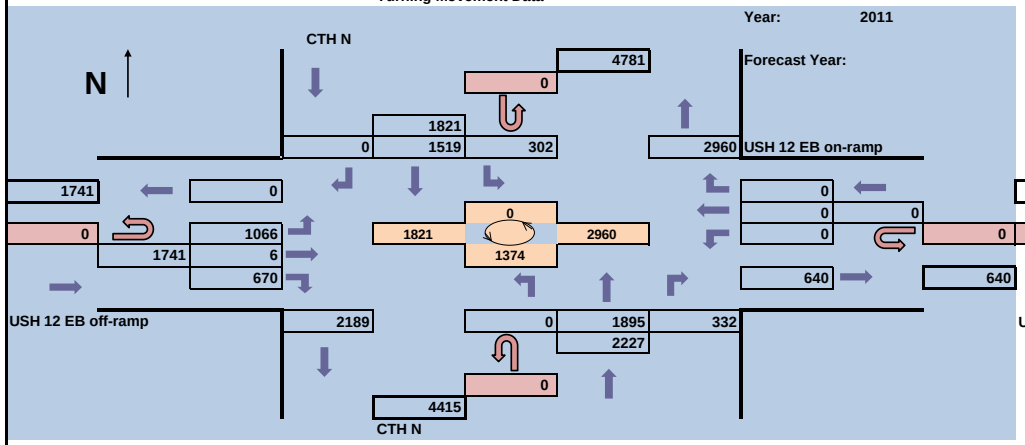

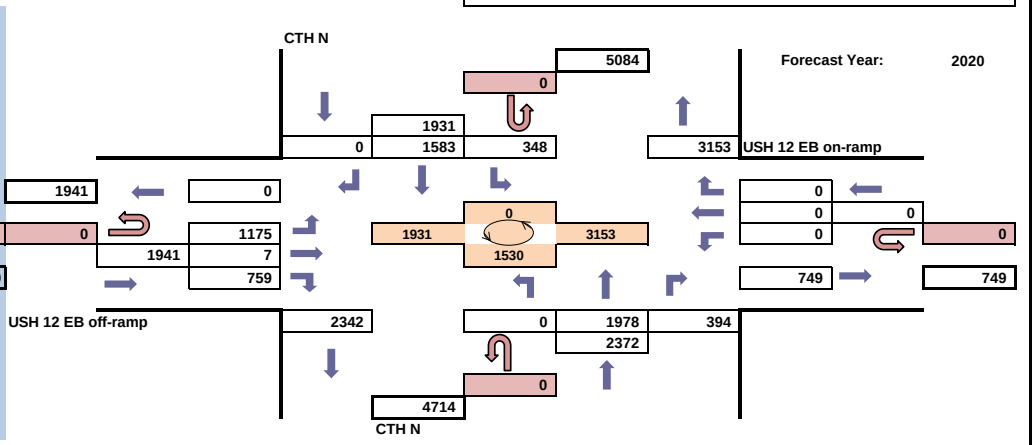

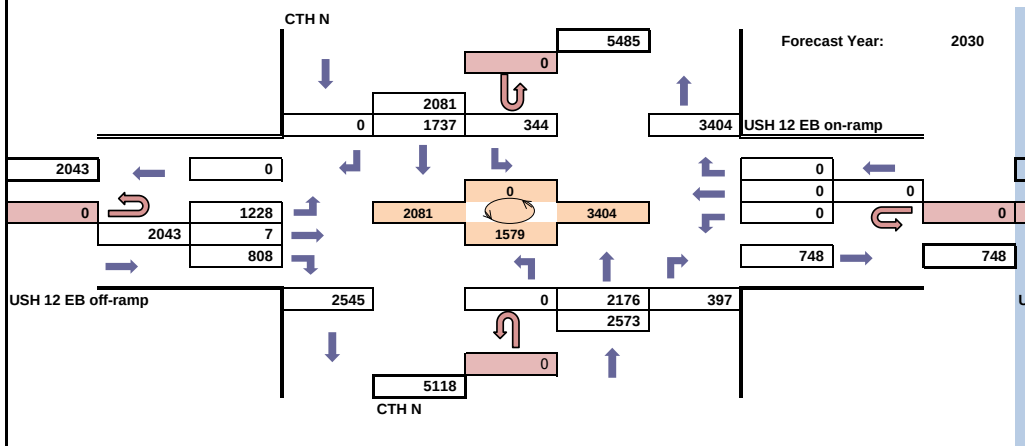

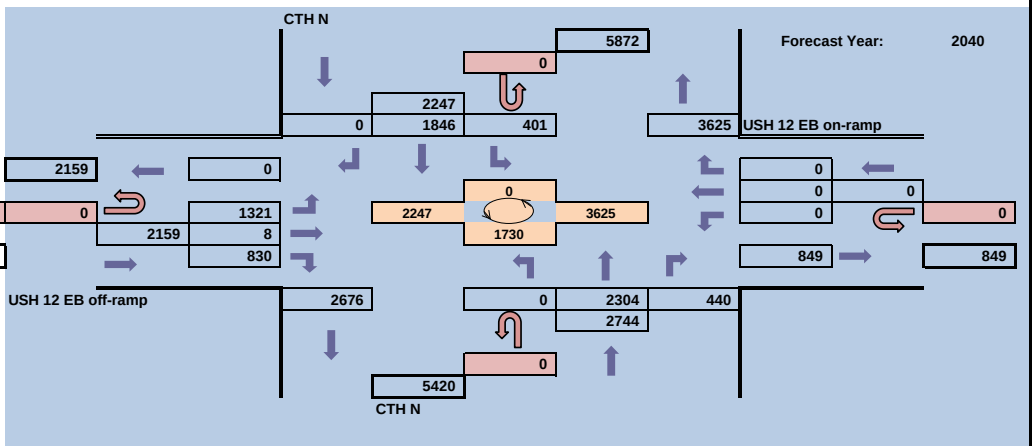

WisDot Bureau of Planning
Traffic Forecasting Section
Forecast by: Jennifer Hill
Phone: 608-266-3322
Email: Jennifer.Hill@dot.wi.gov

Projected AM Design Hour Traffic Volumes

Design Hour: 7:00 - 8:00

Forecast Completed: October 6, 2011

Project Description

Project ID: 3080-00-09
Location: CTH N (Dane) to STH 26 (Jefferson)
Route: USH 12
Region/County: SW / Dane & Jefferson

Design Hour Turning Movement Data

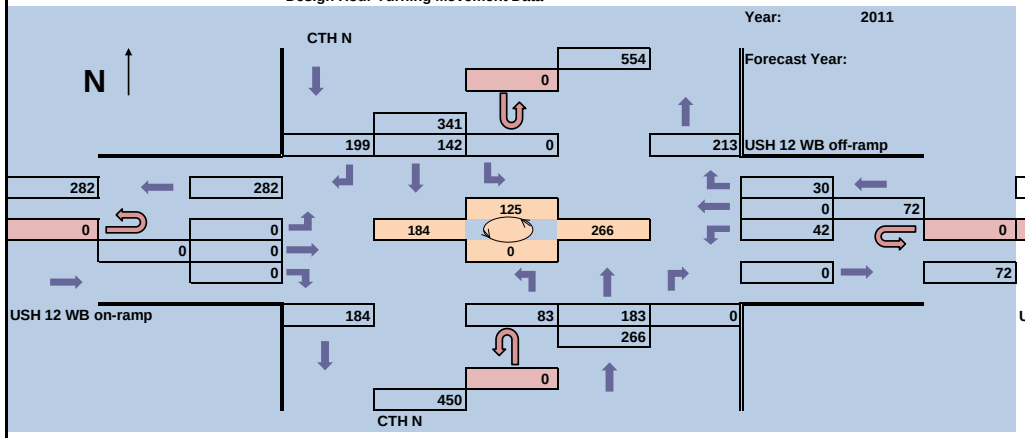

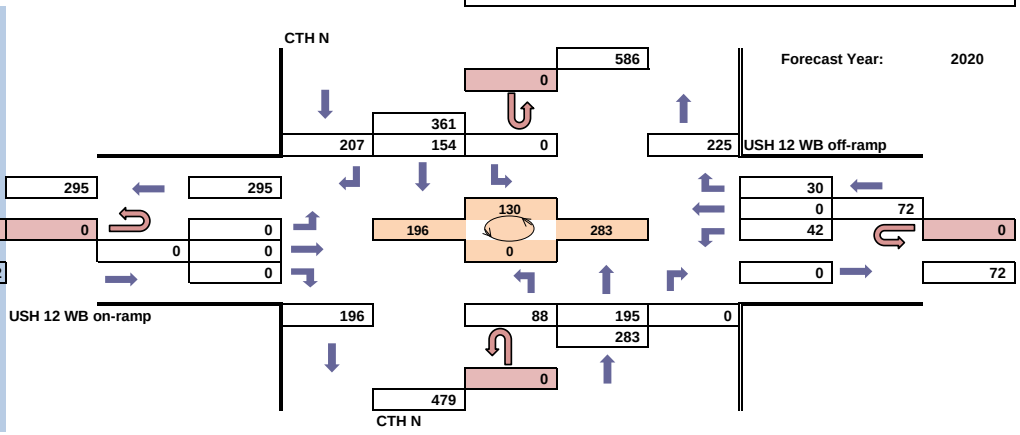

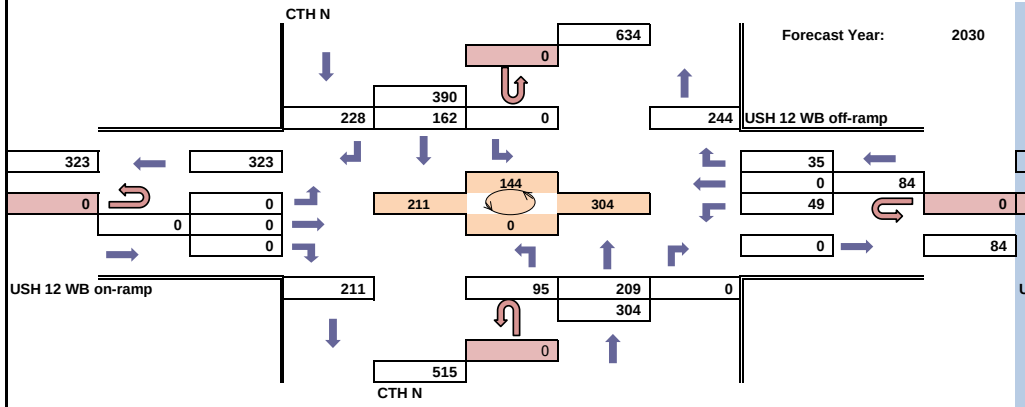

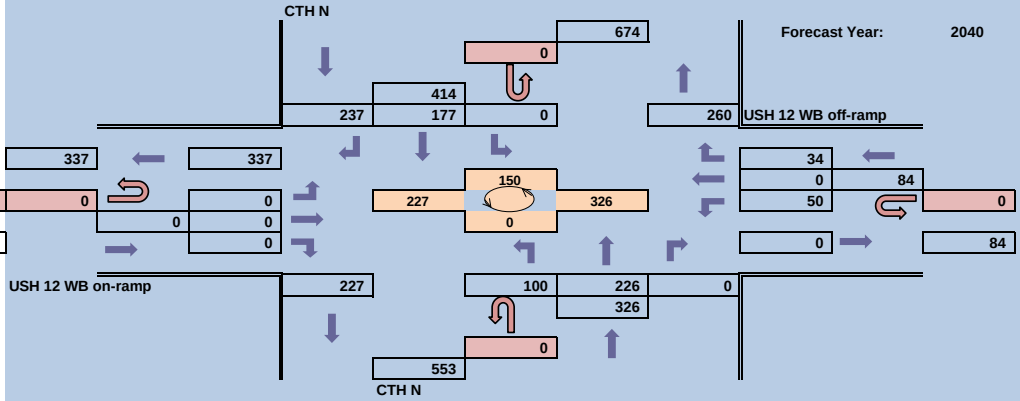

WisDot Bureau of Planning

Traffic Forecasting Section
Forecast by: Jennifer Hill
Phone: 608-266-3322
Email: Jennifer.Hill@dot.wi.gov

Projected PM Design Hour Traffic Volumes

Design Hour: 4:30 - 5:30

Forecast Completed: October 6, 2011

Project Description

Project ID: 3080-00-09
Location: CTH N (Dane) to STH 26 (Jefferson)
Route: USH 12
Region/County: SW / Dane & Jefferson

Design Hour Turning Movement Data

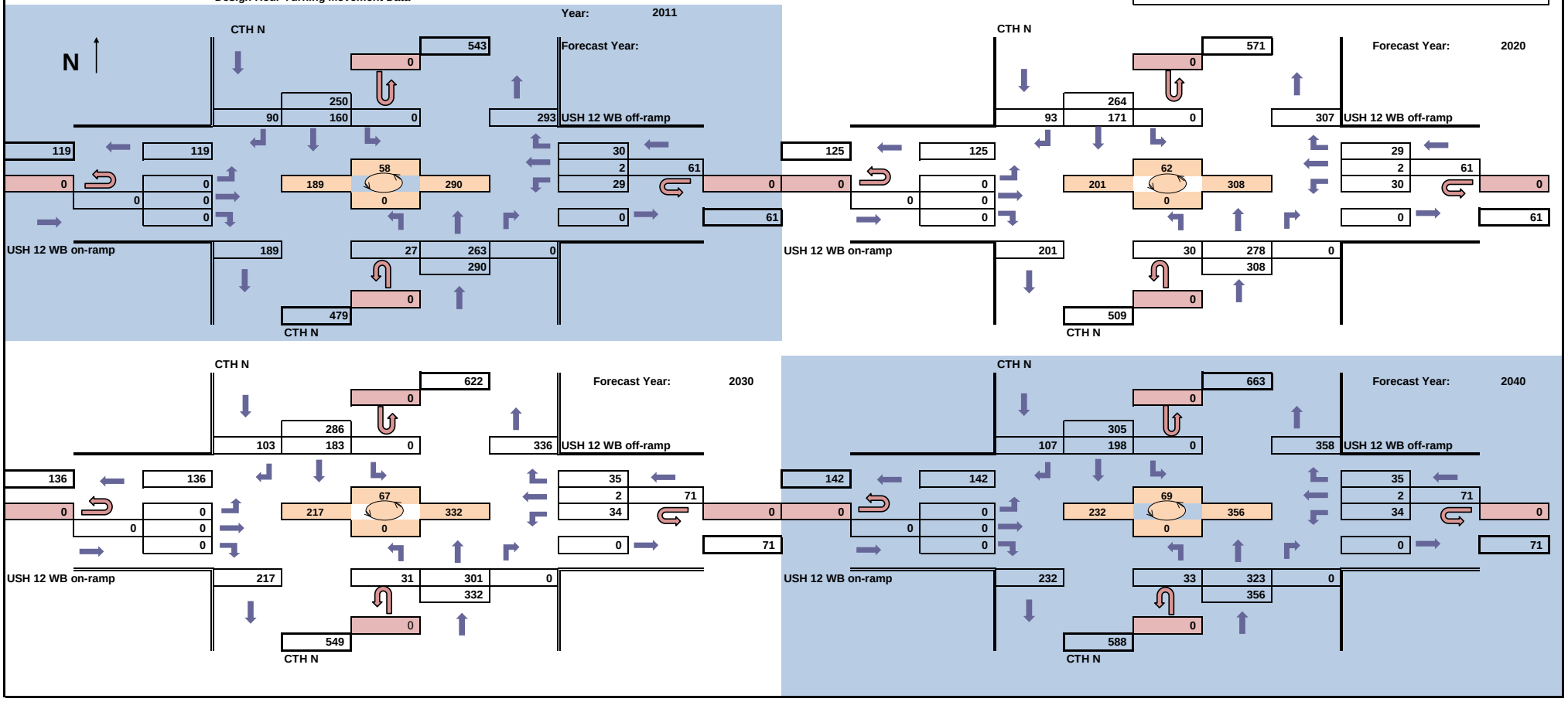

WisDot Bureau of Planning

Traffic Forecasting Section
Forecast by: Jennifer Hill
Phone: 608-266-3322
Email: Jennifer.Hill@dot.wi.gov

Projected Average Annual Daily Traffic Volumes

Design Hour: N/A

Forecast Completed: October 6, 2011

Project Description

Project ID: 3080-00-09
Location: CTH N (Dane) to STH 26 (Jefferson)
Route: USH 12
Region/County: SW / Dane & Jefferson

Turning Movement Data

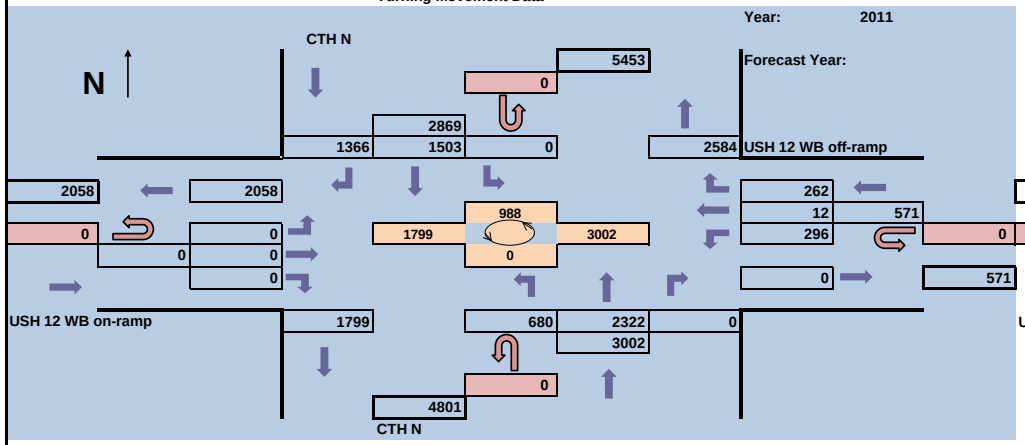

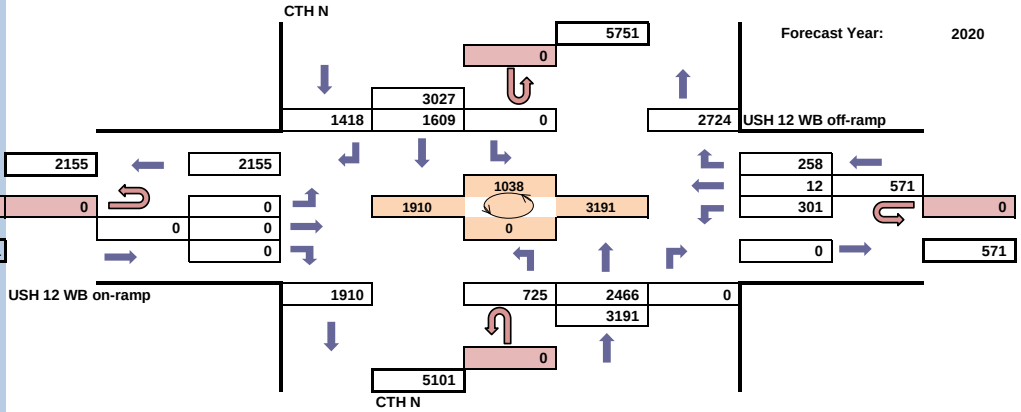

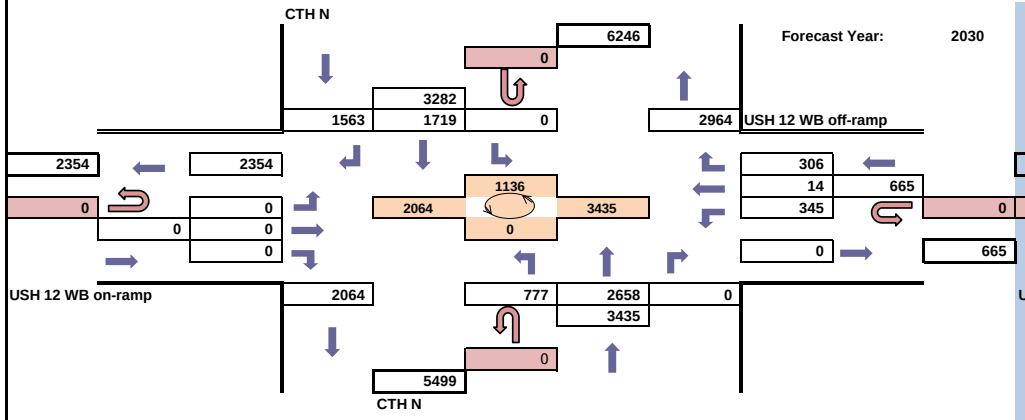

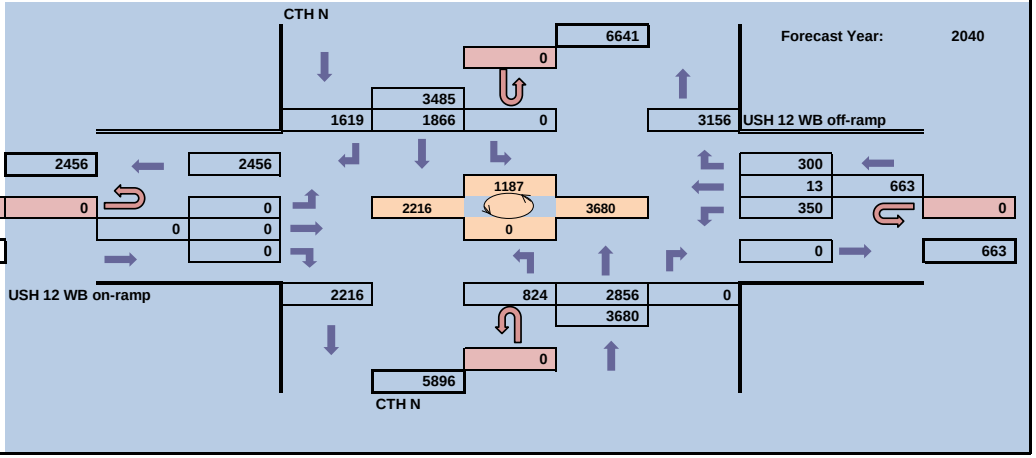

Appendix I Drainage Outlets and Structures Inventory

TranSmart Technologies, Inc.
2802 Coho Street
Suite 102
Madison, WI 53713
Phone: 608.273.4740
Fax: 608.273.4783

July 2011

Drainage Outlets and Structures Inventory
US 12 Corridor Study

This memorandum is intended to provide an inventory of drainage outlets (cross culverts), bridges and other structures located within the US 12 study corridor between County N in Dane County and WIS 26 in Jefferson County.

Bridges, culverts, and retaining walls were identified in the US 12 study corridor by examining WisDOT as-built plans and verified by a field survey. The as-built plans are the result of reconstructions of US 12 that occurred in 1998 (between County N and WIS 134) and 2004 (between WIS 134 and WIS 26). The following as-built project plan sets were consulted: 3080-00-72, 3080-00-73, 3080-01-71, 3080-00-76, and 3575-00-73.

Four bridges, 65 culverts, and four retaining walls were identified as being located within the study corridor. Exhibit 1 on the next page provides an inventory map of these structures in the study corridor. The table US 12 Drainage Outlets and Structures, attached at the end of this memorandum, provides descriptions of each item (the Sheet Reference column of the PDF version has links to corresponding plan sheets). The inventory map and table use the following prefixes for identification purposes: C denotes culverts, B denotes bridges, and RW denotes retaining walls.

Exhibit 1

Drainage Outlets & Structures Inventory

US 12 Corridor Study

Scale 1:90,000

TranSmart

US 12 Drainage Outlets and Structures

ID	Type	Description	Sheet Reference	PDF Number	Sheet Date	Notes
B-13-456	Bridge	2 - Span / 1370 mm Prestressed Concrete Girders	3080-00-72 Sheet 5.23	1	1998	
C-1	RCCP (CPRC)	1 - 2100 mm Reinforced Concrete Culvert Pipe / Skew 12° -LHF	3080-00-72 Sheet 5.7	2	1998	
C-2	RCCP (CPRC)	1 - 600 mm Reinforced Concrete Culvert Pipe	3080-00-72 Sheet 5.8	3	1998	3080-00-72 Sheet 5.10 (4)
C-3	RCCP (CPRC)	1 - 300 mm Reinforced Concrete Culvert Pipe	3080-00-72 Sheet 5.8	3	1998	3080-00-72 Sheet 5.10 (4)
C-4	RCCP (CPRC)	2 - 1200 mm Reinforced Concrete Culvert Pipe / Skew 30°-LHF	3080-00-72 Sheet 5.11	5	1998	
C-5	RCHECP (CPRCHE)	2 - 1705 mm x 2690 mm Reinforced Concrete Horizontal Elliptical Culvert Pipe / Skew 15° - RHF	3080-00-72 Sheet 5.12	6	1998	
C-6	RCCP (CPRC)	1 - 900 mm Reinforced Concrete Culvert Pipe	3080-00-72 Sheet 5.12	6	1998	
C-7	RCHECP (CPRCHE)	1 - 975 mm x 1535 mm Reinforced Concrete Horizontal Elliptical Culvert Pipe	3080-00-72 Sheet 5.13	7	1998	
C-8	RCHECP (CPRCHE)	1 - 490 mm x 770 mm Reinforced Concrete Horizontal Elliptical Culvert Pipe / Skew 15° - RHF	3080-00-73 Sheet 5.1	8	1998	
C-9	RCCP (CPRC)	1 - 300 mm Reinforced Concrete Culvert Pipe	3080-00-73 Sheet 5.1	8	1998	
C-10	RCCP (CPRC)	1 - 600 mm Reinforced Concrete Culvert Pipe	3080-00-73 Sheet 5.1	8	1998	
C-11	RCCP (CPRC)	1 - 900 mm Reinforced Concrete Culvert Pipe	3080-00-73 Sheet 5.2	9	1998	
C-12	RCCP (CPRC)	1 - 600 mm Reinforced Concrete Culvert Pipe	3080-00-73 Sheet 5.2	9	1998	
C-13	RCCP (CPRC)	1 - 600 mm Reinforced Concrete Culvert Pipe	3080-00-73 Sheet 5.2	9	1998	
C-14	RCCP (CPRC)	1 - 900 mm Reinforced Concrete Culvert Pipe	3080-00-73 Sheet 5.2	9	1998	
C-15	RCCP (CPRC)	1 - 900 mm Reinforced Concrete Culvert Pipe	3080-00-73 Sheet 5.3	10	1998	
C-16	RCCP (CPRC)	1 - 900 mm Reinforced Concrete Culvert Pipe	3080-00-73 Sheet 5.4	11	1998	
C-17	RCCP (CPRC)	1 - 900 mm Reinforced Concrete Culvert Pipe	3080-00-73 Sheet 5.5	12	1998	
C-18	RCCP (CPRC)	1 - 900 mm Reinforced Concrete Culvert Pipe	3080-00-73 Sheet 5.5	12	1998	
C-19	RCCP (CPRC)	1 - 900 mm Reinforced Concrete Culvert Pipe	3080-00-73 Sheet 5.6	13	1998	
C-20	RCCP (CPRC)	1 - 900 mm Reinforced Concrete Culvert Pipe	3080-00-73 Sheet 5.6	13	1998	
C-21	RCCP (CPRC)	1 - 1200 mm Reinforced Concrete Culvert Pipe	3080-00-73 Sheet 5.6	13	1998	
C-22	RCHECP (CPRCHE)	1 - 975 mm x 1535 mm Reinforced Concrete Horizontal Elliptical Culvert Pipe	3080-00-73 Sheet 5.7	14	1998	
C-23	RCCP (CPRC)	1 - 600 mm Reinforced Concrete Culvert Pipe	3080-00-73 Sheet 5.8	15	1998	
C-24	CCP (CPC?)	1 - 600 mm Concrete Culvert Pipe (Existing Remains)	3080-00-73 Sheet 5.9	16	1998	
B-13-358	Bridge	Reinforced Concrete Slabs	3080-00-73 Sheet 5.9	16	1998	3082-02-72 Sheet 8.0 (1987) (17)
C-25	RCCP (CPRC)	1 - 750 mm Reinforced Concrete Culvert Pipe	3080-00-73 Sheet 5.10	18	1998	
C-26	RCCP (CPRC)	1 - 750 mm Reinforced Concrete Culvert Pipe	3080-00-73 Sheet 5.10	18	1998	
C-27	RCCP (CPRC)	1 - 900 mm Reinforced Concrete Culvert Pipe	3080-00-73 Sheet 5.11	19	1998	
C-28	RCCP (CPRC)	1 - 600 mm Reinforced Concrete Culvert Pipe	3080-00-73 Sheet 5.12	20	1998	
C-29	RCCP (CPRC)	1 - 900 mm Reinforced Concrete Culvert Pipe	3080-00-73 Sheet 5.13	21	1998	
C-30	RCCP (CPRC)?	1 - 900 mm Reinforced Concrete Culvert Pipe	3080-00-73 Sheet 5.14	22	1998	
C-31	CPRC CLASS III	1 - 24" Culvet Pipe Reinforced Concrete; 2 - 24" APRON ENDWALLS	3080-01-71 Sheet 279	23	2004	Extended Previous Culvert
B-13-449	Bridge		3080-00-76 Sheet 286	24	2004	Built 1998
C-32	CPRC CLASS III	1 - 24" x 67' Culvert Pipe Reinforced Concrete; 2 - 24" APRON ENDWALLS	3575-00-73 Sheet 298	25	2004	
C-33	CPRC CLASS III	1 - 24" x 90' Culvert Pipe Reinforced Concrete; 2 - 24" APRON ENDWALLS	3575-00-73 Sheet 298	25	2004	
C-34	CPRC CLASS III	1 - 24" x 70' Culvert Pipe Reinforced Concrete; 1 - 24" APRON ENDWALLS; 1 - Inlet Type 8-MS	3575-00-73 Sheet 298	25	2004	
C-35	CPRC CLASS III	1 - 36" x 71' Culvert Pipe Reinforced Concrete; 2 - 36" APRON ENDWALLS; Skew 96°50'24" RHF	3575-00-73 Sheet 299	26	2004	
C-36	CPRC CLASS III	1 - 36" x 80' Culvert Pipe Reinforced Concrete; 2 - 36" APRON ENDWALLS	3575-00-73 Sheet 300	27	2004	
C-37	CPRC CLASS III	1 - 30" x 67' Culvert Pipe Reinforced Concrete; 2 - 30" APRON ENDWALLS	3575-00-73 Sheet 300	27	2004	
C-38	CPRC CLASS III	1 - 24" x 78' Culvert Pipe Reinforced Concrete; 2 - 24" APRON ENDWALLS	3575-00-73 Sheet 300	27	2004	
RW-1	Retaining Wall	1 - R-28-23	3575-00-73 Sheet 300	27	2004	
RW-2	Retaining Wall	1 - R-28-24	3575-00-73 Sheet 300	27	2004	
C-39	CPRC CLASS III	1 - 30" x 95' Culvert Pipe Reinforced Concrete; 2 - 30" APRON ENDWALLS	3575-00-73 Sheet 301	28	2004	
C-40	CPRC CLASS III	1 - 30" x 70' Culvert Pipe Reinforced Concrete; 2 - 30" APRON ENDWALLS	3575-00-73 Sheet 301	28	2004	
C-41	CPRC CLASS IV	2 - 36" x 64' Culvert Pipe Reinforced Concrete; 2 - CONCRETE MASONRY ENDWALLS	3575-00-73 Sheet 302	29	2004	

US 12 Drainage Outlets and Structures

ID	Type	Description	Sheet Reference	PDF Number	Sheet Date	Notes
C-42	CPRC CLASS III	1 - 60" x 102' Culvert Pipe Reinforced Concrete; 2 - 60" APRON ENDWALLS	3575-00-73 Sheet 302	29	2004	
C-43	CPRC CLASS III	1 - 24" x 60' Culvert Pipe Reinforced Concrete; 2 - 24" APRON ENDWALLS	3575-00-73 Sheet 303	30	2004	
C-44	CPRC CLASS III	1 - 24" x 84' Culvert Pipe Reinforced Concrete; 2 - 24" APRON ENDWALLS; 1 - Inlet Type 8-MS	3575-00-73 Sheet 303	30	2004	
C-45	CPRC CLASS III	2 - 60" x 85' Culvert Pipe Reinforced Concrete; 2 - CONCRETE MASONRY ENDWALLS	3575-00-73 Sheet 303	30	2004	
C-46	CPRC CLASS III	1 - 36" x 80' Culvert Pipe Reinforced Concrete; 2 - 36" APRON ENDWALLS	3575-00-73 Sheet 304	31	2004	
C-47	CPRC CLASS III	1 - 36" x 95' Culvert Pipe Reinforced Concrete; 2 - 36" APRON ENDWALLS	3575-00-73 Sheet 304	31	2004	
C-48	CPRCHE CLASS HE-III	2 - 34" x 53" x 150 ' Culvert Pipe Reinforced Concrete Horizontal Elliptical; 2 - CONCRETE MASONRY ENDWALLS; Skew 42°33'36" LHF	3575-00-73 Sheet 304	31	2004	
C-49	CPRC CLASS III	1 - 36" x 98' Culvert Pipe Reinforced Concrete; 2 - 36" APRON ENDWALLS	3575-00-73 Sheet 305	32	2004	
RW-3	Retaining Wall	1 - R-28-25	3575-00-73 Sheet 305	32	2004	
RW-4	Retaining Wall	1 - R-28-26	3575-00-73 Sheet 305	32	2004	
C-50	CPRCHE CLASS HE-III	2 - 53" x 83" x 90 ' Culvert Pipe Reinforced Concrete Horizontal Elliptical; 2 - CONCRETE MASONRY ENDWALLS	3575-00-73 Sheet 306	33	2004	
C-51	CPRCHE CLASS HE-III	3 - 43" x 68" x 70 ' Culvert Pipe Reinforced Concrete Horizontal Elliptical; 2 - CONCRETE MASONRY ENDWALLS; Skew 28°50'24" LHF	3575-00-73 Sheet 306	33	2004	
C-52	CPRC CLASS III	1 - 36" x 110' Culvert Pipe Reinforced Concrete; 1 - 36" APRON ENDWALL	3575-00-73 Sheet 306	33	2004	
C-53	CPRC CLASS III	1 - 36" x 110' Culvert Pipe Reinforced Concrete; 1 - 36" APRON ENDWALL	3575-00-73 Sheet 306	33	2004	1 - MANHOLE TYPE 3-J REQD
C-54	CPRCHE CLASS HE-III	1 - 38" x 60" x 98 ' Culvert Pipe Reinforced Concrete Horizontal Elliptical; 2 - 38" x 60" APRON ENDWALLS	3575-00-73 Sheet 307	34	2004	
C-55	CPRC CLASS III	3 - 72" x 65' Culvert Pipe Reinforced Concrete; 2 - CONCRETE MASONRY ENDWALLS; Skew 19°120'00" RHF	3575-00-73 Sheet 307	34	2004	
C-56	CPRC CLASS III	1 - 24" x 152' Culvert Pipe Reinforced Concrete; 2 - 24" APRON ENDWALLS	3575-00-73 Sheet 308	35	2004	
C-57	CPRC CLASS III	1 - 60" x 210' Culvert Pipe Reinforced Concrete; 2 - 60" APRON ENDWALLS; Skew 27°07'124" RHF	3575-00-73 Sheet 308	35	2004	
C-58	CPRC CLASS III	1 - 36" x 91' Culvert Pipe Reinforced Concrete; 2 - 36" APRON ENDWALLS	3575-00-73 Sheet 309	36	2004	
C-59	CPRC CLASS III	1 - 18" x 60' Culvert Pipe Reinforced Concrete; 1 - 18" APRON ENDWALLS	3575-00-73 Sheet 309	36	2004	
C-60	CPRC CLASS III	1 - 18" x 600' Culvert Pipe Reinforced Concrete; 2 - 18" APRON ENDWALLS	3575-00-73 Sheet 309	36	2004	
C-61	CPRCHE CLASS HE-III	3 - 29" x 45" x 62 ' Culvert Pipe Reinforced Concrete Horizontal Elliptical; 2 - CONCRETE MASONRY ENDWALLS	3575-00-73 Sheet 310	37	2004	
C-62	CPRC CLASS III	1 - 36" x 132' Culvert Pipe Reinforced Concrete; 2 - 36" APRON ENDWALLS; Skew 102°00'00" RHF	3575-00-73 Sheet 310	37	2004	
C-63	CPRC CLASS III	1 - 18" x 150' Culvert Pipe Reinforced Concrete; 2 - 18" APRON ENDWALLS	3575-00-73 Sheet 310	37	2004	
C-64	CPRC CLASS III	1 - 24" x 110' Culvert Pipe Reinforced Concrete; 2 - 24" APRON ENDWALLS	3575-00-73 Sheet 311	38	2004	
C-65	CPRC CLASS III	1 - 36" x 75' Culvert Pipe Reinforced Concrete; 2 - 36" APRON ENDWALLS	3575-00-73 Sheet 311	38	2004	
B-28-24	Bridge	2 - Span / 45 - Inch Prestressed Concrete Girders	1393-02-78 Sheet 5.0	39	1994	

Appendix J Land Use Maps

Planned Land Use

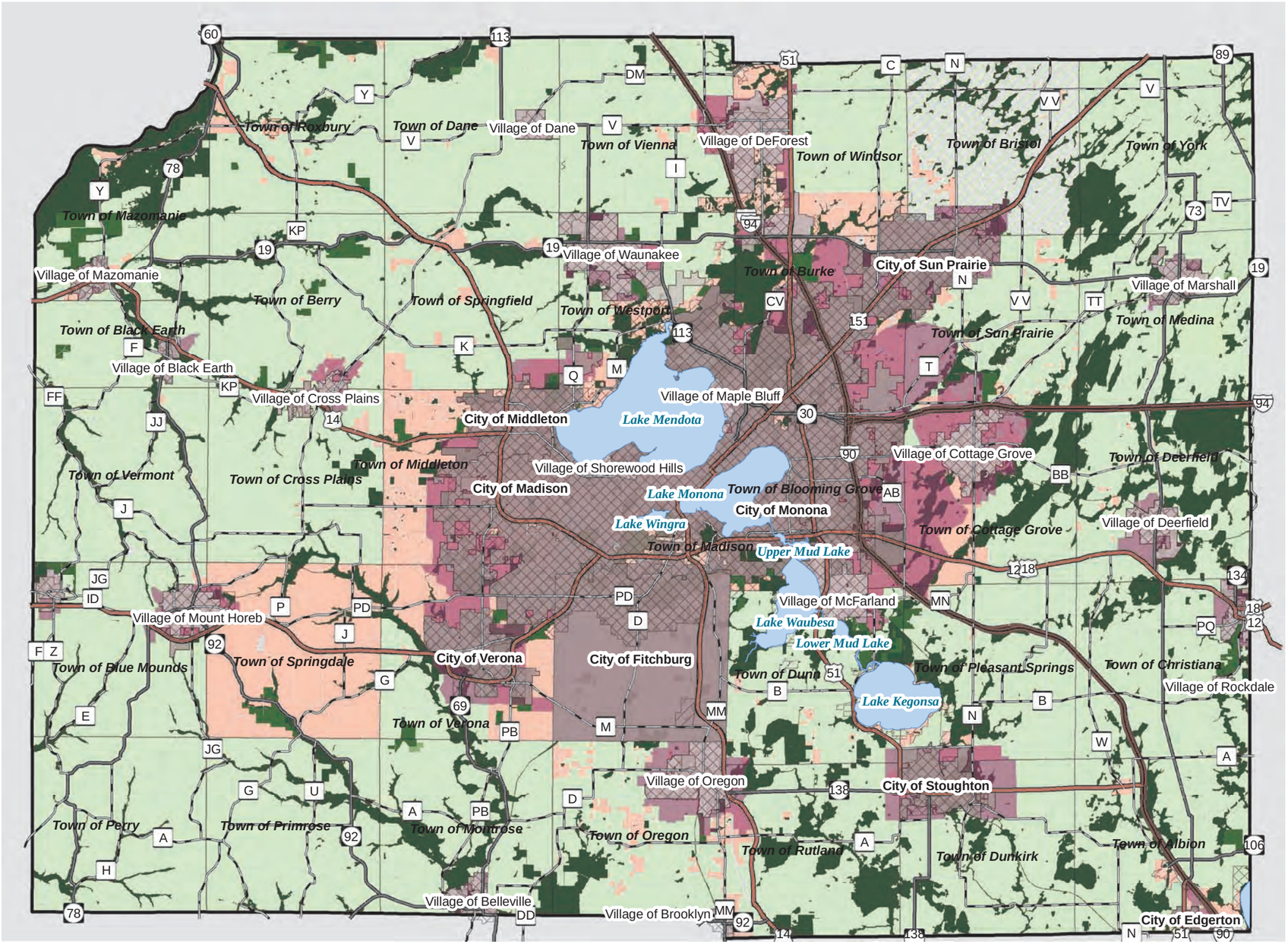

Dane County Comprehensive Plan
Dept. of Planning & Development
210 Martin Luther King Jr. Blvd. Room 116
Madison, WI 53703
www.daneplan.org

Legend

Farmland Preservation

- Agricultural Preservation Areas
- Rural Development / Transitional
- Town Ag. Preservation Areas

Service Areas

- Limited
- Urban

Env. and Open Space Corridors

Overlapping Plan Areas

- City and Village Plans

Parks and Open Space Plan

- Dane County Parks Commission Lands

Standard Legend

- Interstate
- US Highway
- State Highway
- County Highway
- City
- Village
- Town
- Major Lake

What you're looking at:

The growth factors in Dane County:
1. Farmland Preservation Plan
2. Service Areas
3. Env. and Open Space Corridors
4. Overlapping Plans
5. Parks and Open Space

***See plan text for details on the map categories.**

For more information on individual features:
1. http://www.countyofdane.com/PLANDEV/planning/farm_preservation.aspx
See the County Board adopted local plans for details
2. http://www.capitalarearpc.org
3. http://www.capitalarearpc.org
4. See the local plans for details and Wis Stat 59.69 and 66.1001.
5. http://www.countyofdane.com/lwrd/parks/planning.aspx

N W E S

0 5
Miles

July 6, 2010

Source Info: Farmland Preservation & Overlapping Plan Areas (DPD). Park Commission Lands (LWRD). Service Areas & Envr. & Open Space Corridors (CARPC) Road Network: 2009 (DCLIO). Municipal Boundaries & Water: 2010 (DCLIO).
This map was prepared through the Department of Planning and Development in conjunction with the Dane County Land & Water Resources Department , Land Information Office and the Capital Area Regional Planning Commission.

Town of Cottage Grove, Dane County

Map J-3
Land Use Plan: 2010 to 2030

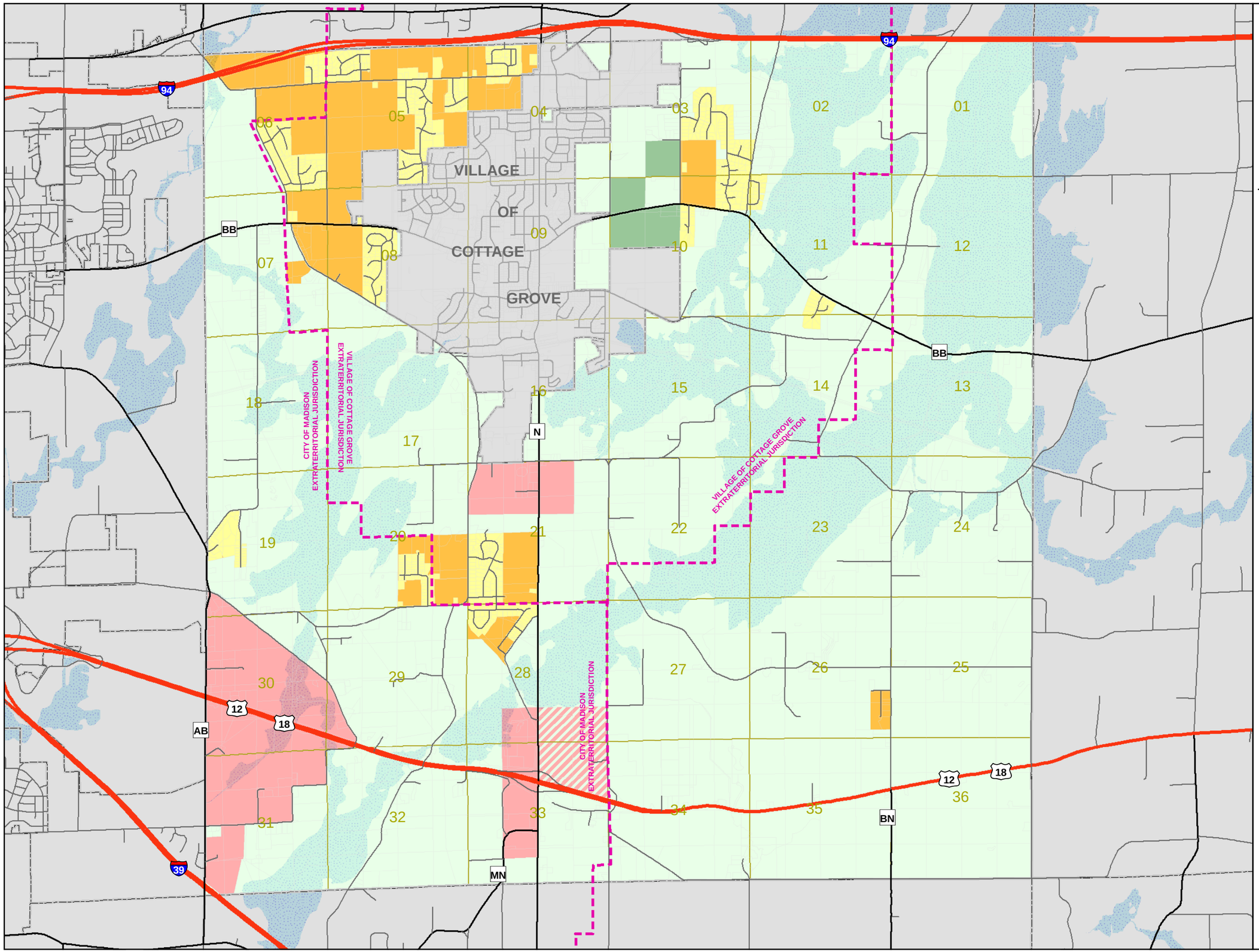

Legend

- Agricultural
- Agribusiness & Sustainable Commercial
- Limited Commercial
- Open Space/Recreation/Separation
- Existing Residential
- Residential - Medium Density
- Resource Protection
- Extraterritorial Jurisdiction Boundary

N
W E
S

0 0.5 1
Miles

CRISPELL-SNYDER, INC.
PROFESSIONAL CONSULTANTS

This Crispell-Snyder, Inc. GIS map contains information including but not limited to Dane County. This data is subject to constant change. Crispell-Snyder, Inc. makes no warranties or guarantees, either expressed or implied, as to the accuracy or correctness of this data, nor accepts any liability arising from any incorrect, incomplete or misleading information contained therein.

3/26/2010 - R:\DaneCo\Cottage_Grove_TWN\Projects\R09_0910_100_Comp\GIS\FLU_11x17.mxd

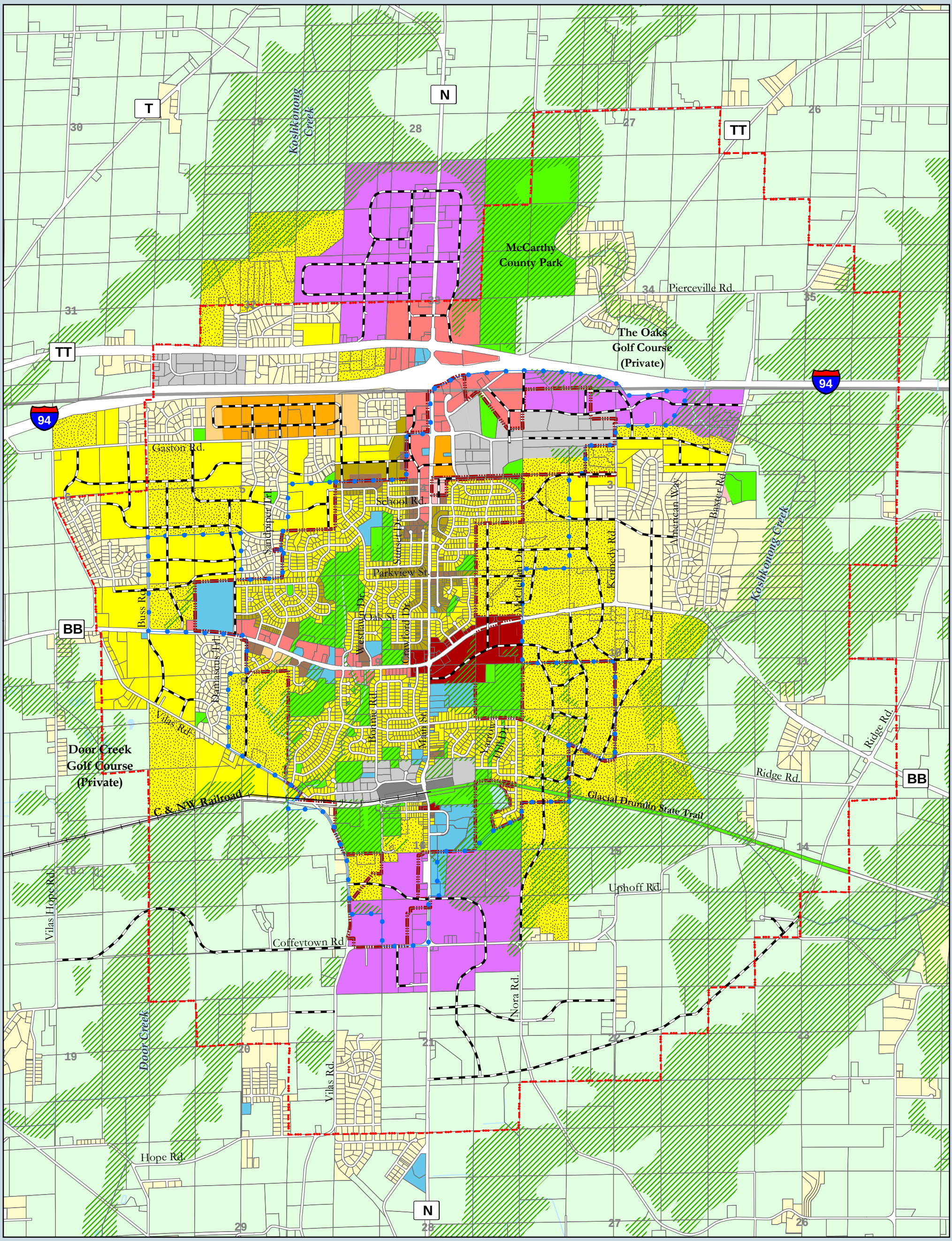

Future Land Use

Map 5

Village of Cottage Grove Comprehensive Plan

Amended June 9, 2010

Sources: Village of Cottage Grove, Dane County, Dane County RPC, V&A

0 0.25 0.5 1 Miles

VANDEWALLE & ASSOCIATES INC.
Shaping places, shaping change

N W E S

- Village of Cottage Grove
- Township Boundary
- Urban Service Area Boundary
- Extraterritorial Jurisdiction Boundary
- Parcels (2009)
- Surface Water
- Railroad
- Proposed Roads

Land Use Categories

- Agriculture/Rural
- Single Family Residential (Unsewered)
- Single Family Residential (Sewered)
- Two-Family Residential
- Multi-Family Residential
- Planned Neighborhood
- Neighborhood Office
- Planned Office
- Neighborhood Business
- Planned Business
- Central Mixed Use
- Planned Mixed Use
- Planned Industrial
- General Industrial
- Community Facility
- Public/Private Parks & Open Space
- Environmental Corridor
- Right of Way

Existing Land Use | Map 4

Village of Cottage Grove Comprehensive Plan

Date: December 21, 2009

Sources: Village of Cottage Grove, Dane County, Dane County RPC, V&A

0 0.25 0.5 1 Miles

VANDEWALLE & ASSOCIATES INC.
Shaping places, shaping change

N W E S

- Village of Cottage Grove
- Township Boundary
- Urban Service Area Boundary
- Extraterritorial Jurisdiction Boundary
- Parcels (2009)
- Surface Water
- Railroad
- Right of Way

Land Use Categories

- Agriculture/Rural
- Single Family Residential (Unsewered)
- Single Family Residential (Sewered)
- Two-Family Residential
- Multi-Family Residential
- Neighborhood Business
- Planned Business
- General Business
- Central Mixed Use
- Planned Office
- Community Facility
- Airport
- Planned Industrial
- General Industrial
- Mineral Extraction
- Public/Private Parks & Open Space
- Environmental Corridor
- Vacant

Town of Deerfield Comprehensive Plan

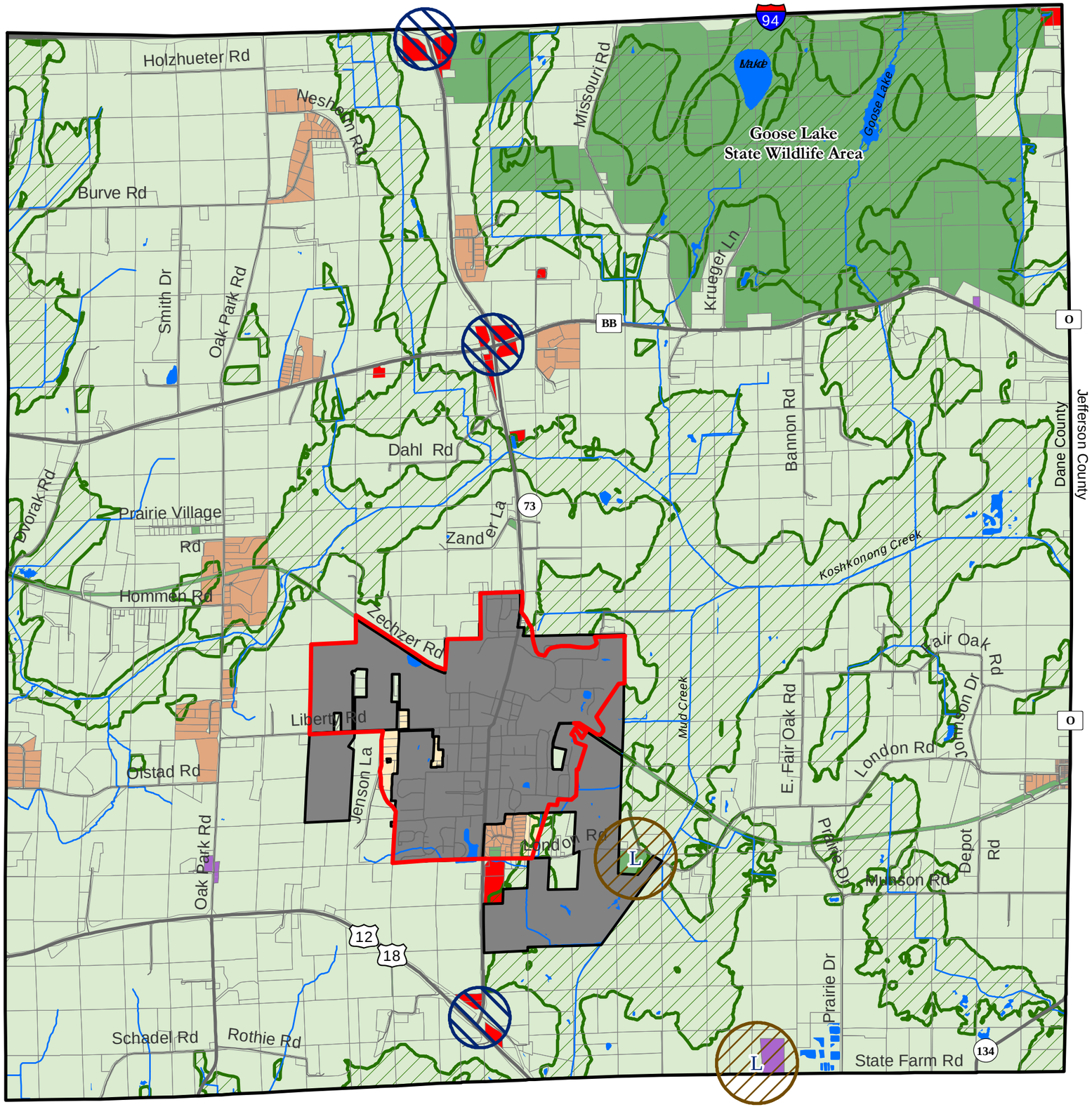

Map 5 Planned Land Use

Agricultural Preservation District

- Preserve productive agricultual lands in the long-term.
- Allow limited commercial and institutional uses.
- One house per 35 acres.

Agricultural Transition District

- Preserve in agriculture and open space until development may be appropriate.
- Town may identify these lands in future for more intensive development.
- Same policies as Agricultural Preservation District until then.

Rural Development District

- Lower density residential development served by on-site systems.
- Limited neighborhood-serving commercial & institutional uses.
- Minimum lot size 40,000 sq ft.
- Use conservation neighborhood design standards.

Open Space Corridors

- Continuous systems of open space as mapped by DCRPC.
- Based mainly on drainageways and stream channels, floodplains, wetlands and other features.

Surface Water
Recreational Lands
General Business
Institutional/Governmental
L Landfill Site
Well Setback Area From Landfill
Deerfield Urban Service Area
Village of Deerfield

Notes: (1) Shapes on map represent general recommendations for future land use. Actual boudnaries between different land use categories and associated zoning districts may vary somewhat from representations on this map.

(2) The above policies for each of the planned land use categories are summaries only. See plan text for more detailed policies.

October 2009

0 0.25 0.5 1 1.5 2 Miles

N

Source Info:
Deerfield Village Boundary: 10/2009, (DCPD)
Floodplains: 2009, (FEMA)
Open Space: 2009, (DCPD)
Service Areas: 10/2009, (CARPC)

DANE COUNTY PLANNING & DEVELOPMENT

This map was prepared through the Dane County Department of Planning and Development in conjuction with the Dane County Land & Water Resources Department, Dane County Land Information Office and the Capital Area Regional Planning Commission.

Town of Deerfield Comprehensive Plan

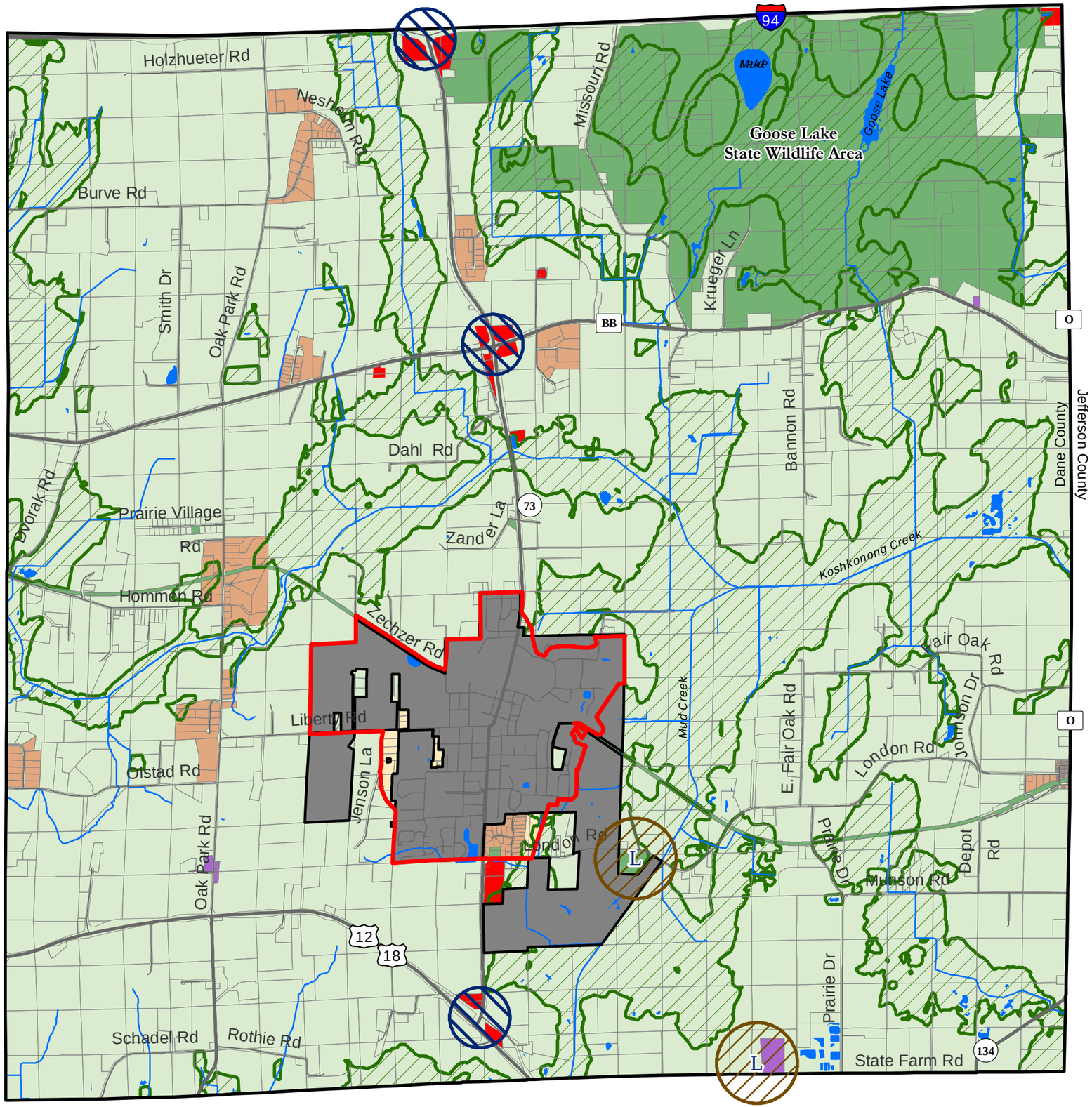

Map 5 Planned Land Use

Agricultural Preservation District

- Preserve productive agricultual lands in the long-term.
- Allow limited commercial and institutional uses.
- One house per 35 acres.

Agricultural Transition District

- Preserve in agriculture and open space until development may be appropriate.
- Town may identify these lands in future for more intensive development.
- Same policies as Agricultural Preservation District until then.

Rural Development District

- Lower density residential development served by on-site systems.
- Limited neighborhood-serving commercial & institutional uses.
- Minimum lot size 40,000 sq ft.
- Use conservation neighborhood design standards.

Open Space Corridors

- Continuous systems of open space as mapped by DCRPC.
- Based mainly on drainageways and stream channels, floodplains, wetlands and other features.

Surface Water
Recreational Lands
General Business
Institutional/Governmental
L Landfill Site
Well Setback Area From Landfill
Deerfield Urban Service Area
Village of Deerfield

Notes: (1) Shapes on map represent general recommendations for future land use. Actual boudnaries between different land use categories and associated zoning districts may vary somewhat from representations on this map.

(2) The above policies for each of the planned land use categories are summaries only. See plan text for more detailed policies.

October 2009

0 0.25 0.5 1 1.5 2 Miles

N

Source Info:
Deerfield Village Boundary: 10/2009, (DCPD)
Floodplains: 2009, (FEMA)
Open Space: 2009, (DCPD)
Service Areas: 10/2009, (CARPC)

DANE COUNTY PLANNING & DEVELOPMENT

This map was prepared through the Dane County Department of Planning and Development in conjuction with the Dane County Land & Water Resources Department, Dane County Land Information Office and the Capital Area Regional Planning Commission.

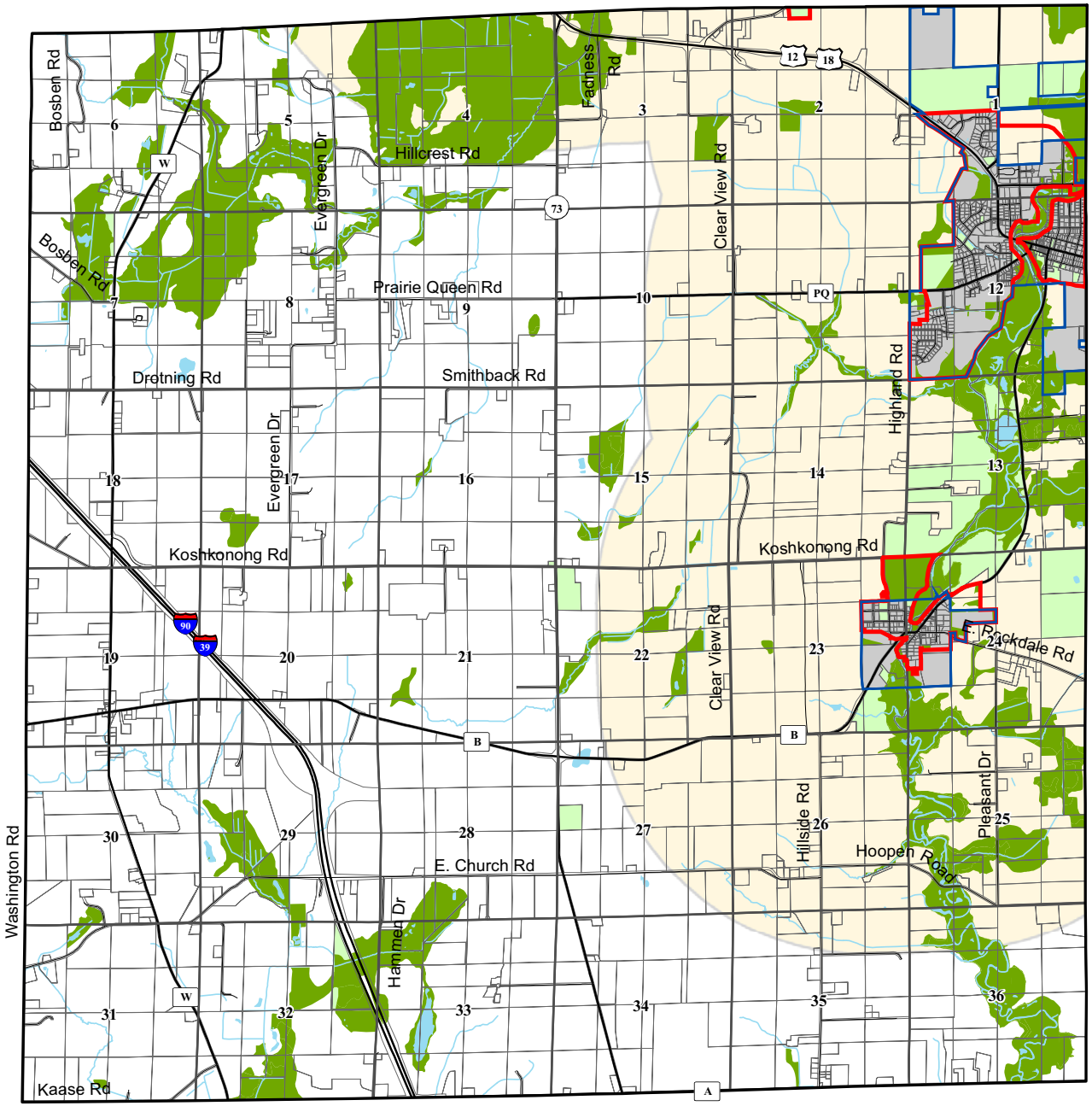

Town of Christiana

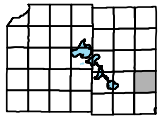

Future Land Use

Urban Service Area

Village Boundary

City or Village ETJ

Agricultural Preservation District

Objective:
The town has established the agricultural preservation district as a means of preserving agricultural lands and rural character throughout the town while providing opportunities for limited non-farm development. This designation will also serve to promote continued investment in agricultural operations by ensuring that incompatible land uses are directed to areas that will minimize interference with farming activities.
The primary land use policy within this district is the density policy, which limits the density of residential development to one dwelling per 35 acres. This district encompasses the most land within the town and includes productive farmlands, farm dwellings, other agricultural land uses, pastureland, woodlots and scattered non-farm single-family dwellings. The policies for this district allow for a limited amount of non-farm residential and commercial development in keeping with the overall goals and objectives of the town to preserve agriculture and rural character.

Environmental & Resource Protection District

Objective:
The town has established the environmental & resource protection district to preserve and enhance unique and sensitive natural resources within the town. This district applies to lands within 100-year floodplains, wetlands, significant woodlands and steep slopes exceeding 12% grade. Non-farm development within the environmental & resource protection district is generally discouraged. Any proposed development in this district shall comply with the policies listed below, and with the siting standards and criteria of the agricultural preservation district.

Public Lands

Objective:
The town has established the public lands district to guide future decision-making with regard to lands owned by public agencies. The primary designation for this district is land owned by the Wisconsin Department of Natural Resources in the southwest part of the town. The policies for this district are designed to ensure town input on future land use decisions, acquisitions or dispensations of lands owned by public entities.

Dec., 2008

0 0.25 0.5 1 1.5 2 Miles

N

Source Info:
Village Boundary: 01/07, (DCPD)
Service Areas: 04/08, (CARPC)
Soils: 2000, (DCLIO)

This map was prepared through the Dane County Department of Planning and Development in conjuction with the Dane County Land & Water Resources Department, Dane County Land Information Office and the Dane County Community Analysis & Planning Division.

EXISTING LAND USE

Village of Cambridge Smart Growth Plan

Cambridge, Wisconsin

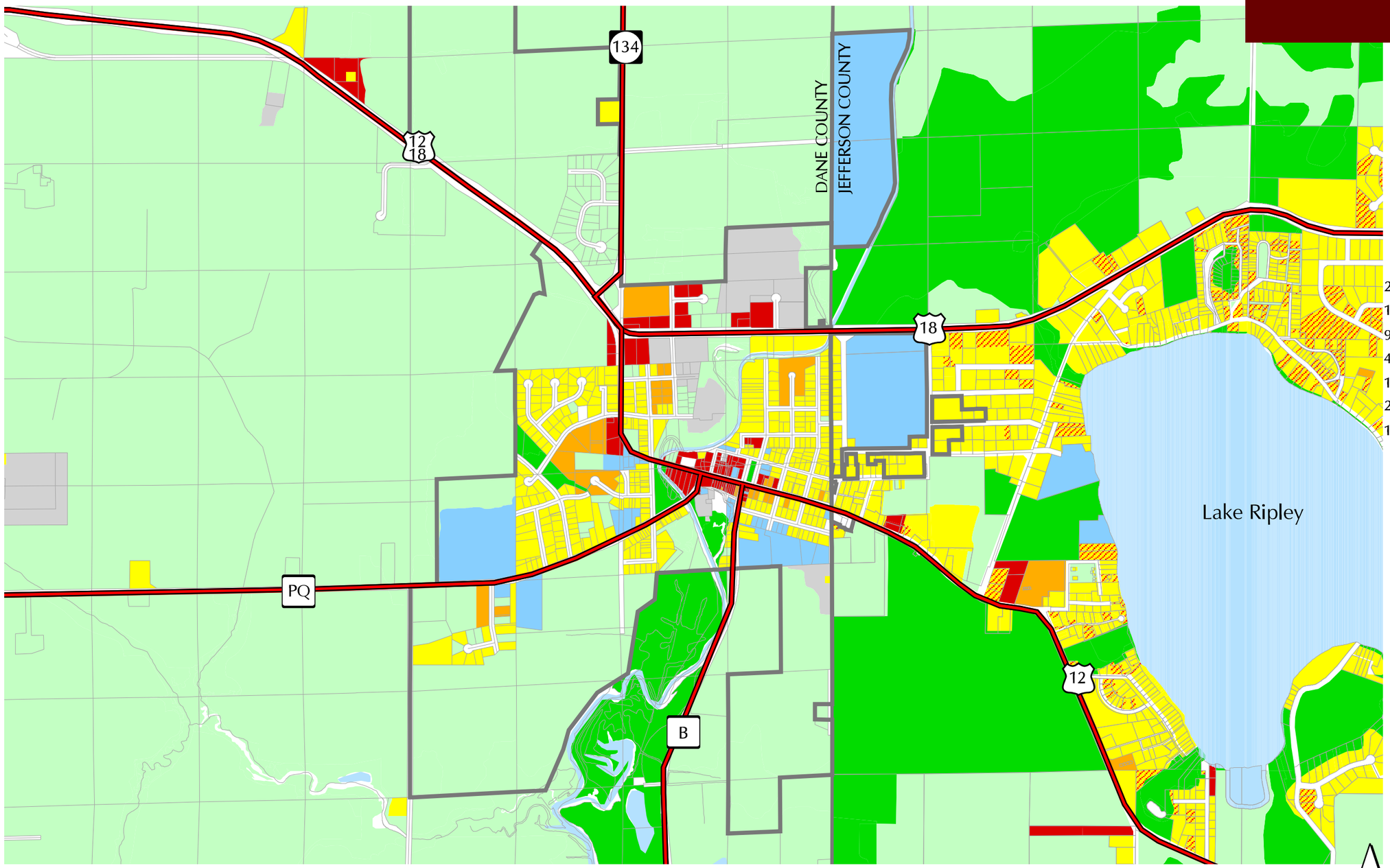

Legend

- Village Boundary
- 211.93 AC Agriculture
- 16.02 AC Commercial
- 99.96 AC Institutional
- 41.72 AC Industrial
- 10.35 AC Parks & Open Space
- 25.00 AC Multi-Family Residential
- 102.53 AC Single Family Residential
- Vacant Lot

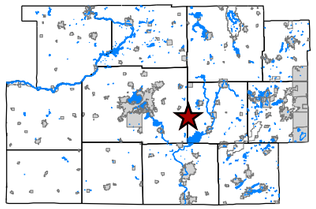

Location Map

N

0′ 1300′ 2600′

Rudd & Associates ● Schreiber/Anderson Associates, Inc.

Source: Dane County Land Information Office
Jefferson County Land Information Office

PROPOSED LAND USE

Village of Cambridge Smart Growth Plan

Cambridge, Wisconsin

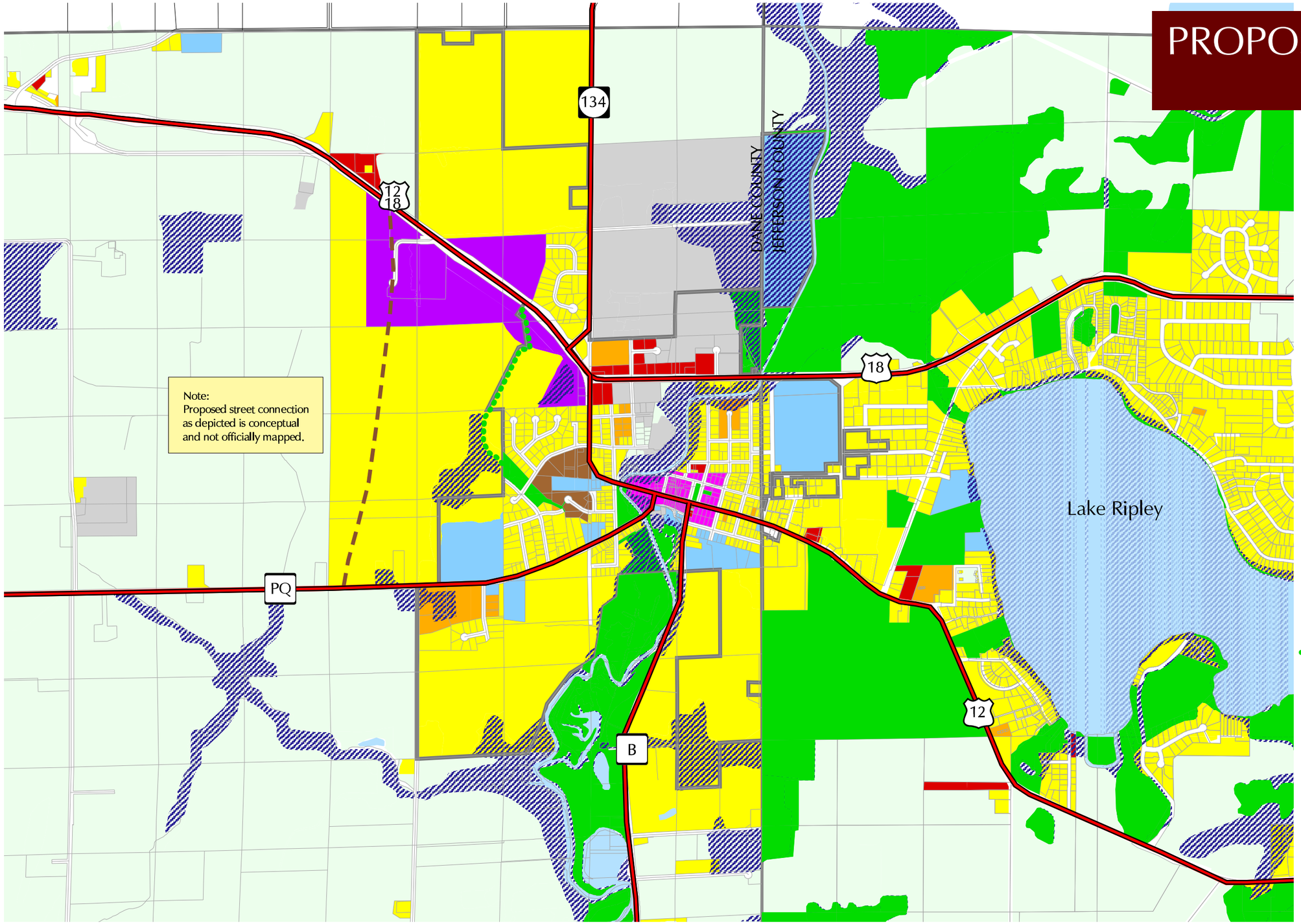

Legend

- Existing Village Boundary
- Agriculture
- Commercial
- Institutional
- Industrial
- Parks & Open Space
- HDR 6-12 d/u per acre (net)
- MDR 4-5 d/u per acre (net)
- LDR 1-3 d/u per acre (net)
- CBD
- Mixed Use
- Environmental Corridor
- Proposed Street Connection
- Recommended Trail Connection

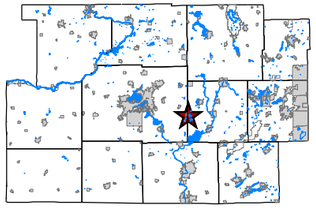

Location Map

N

0′ 1500′ 3000′

Rudd & Associates ● Schreiber/Anderson Associates, Inc.

Source: Dane County Land Information Office
Jefferson County Land Information Office

Existing Land Use

Town of Oakland
Jefferson County, WI

MAP - 5

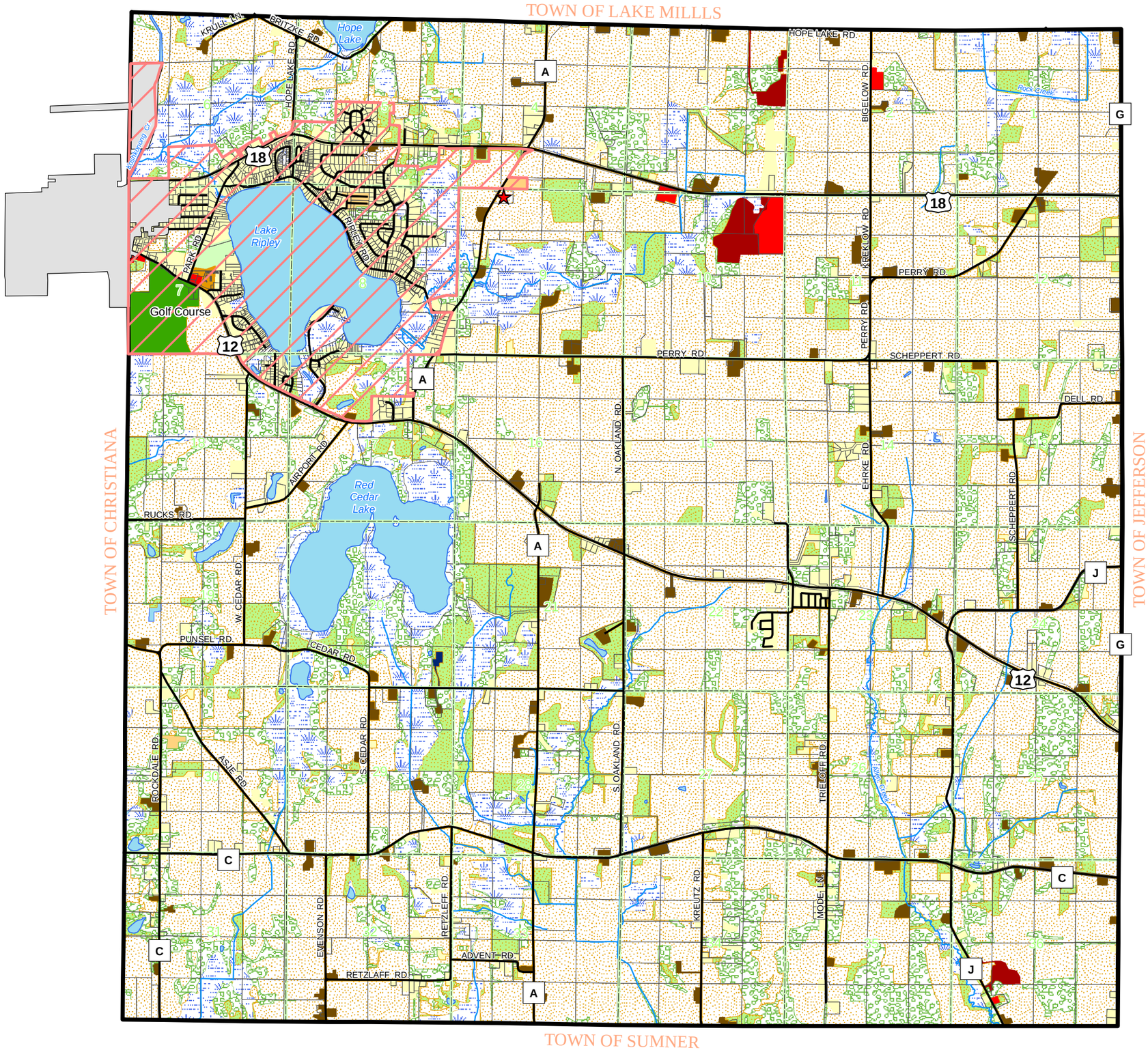

Legend

- Oakland Town Hall
- Urban Service Area
- Cambridge
- Town of Oakland
- Parcels
- Sections
- Roads
- Lakes
- Rivers

Existing Land Use

- Wooded Lands
- Commercial
- Farmstead
- Industrial
- Parks and Recreation
- Multi-Family Residential
- Mobile Home
- Agricutlure
- Quarry
- Institutional
- Single Family Residential
- Pasture/Open Space
- Transportation
- Golf Course
- Lakes
- WiDNR Wetlands

Feet

0 3,300 6,600

Sources:
- Base data provided by Iron County
- Land use observed from Ortho Photos

MSA PROFESSIONAL SERVICES
TRANSPORTATION • MUNICIPAL
DEVELOPMENT • ENVIRONMENTAL

Drafted - LSR, Date - 06-30-08, File - g:/projects/..Oakland

Future Land Use

Town of Oakland
Jefferson County, WI

MAP - 6

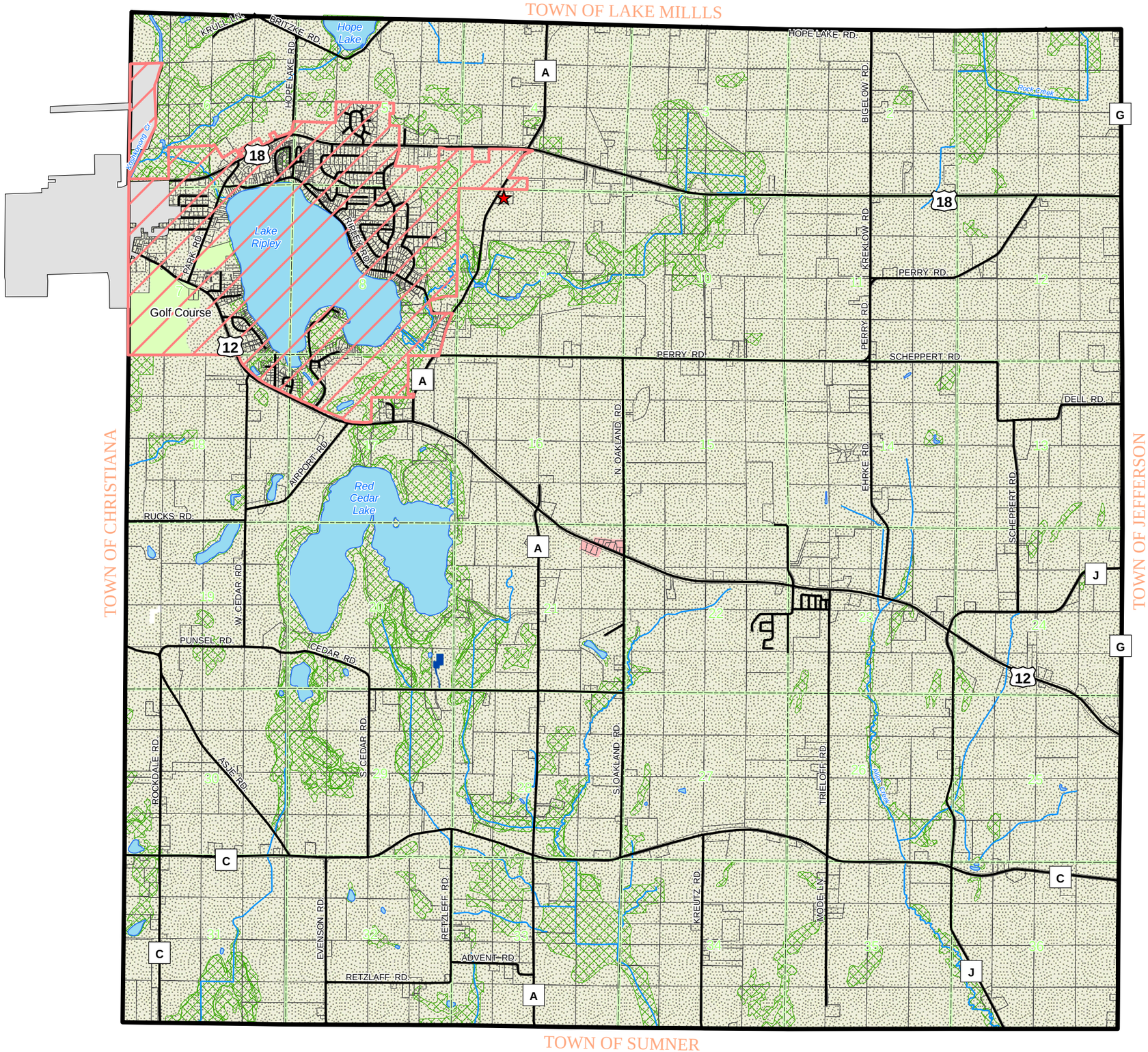

Legend

- Oakland Town Hall
- Cambridge
- Town of Oakland
- Parcels
- Sections
- Roads
- Lakes
- Rivers

Future Land Use

- Rural Agriculture
- Oakland Center
- Institutional
- Parks and Recreation
- Transportation
- Resource Protection Area
- Urban Service Area

Feet

0 3,300 6,600

Sources:
- Base data provided by Iron County
- Land use observed from Ortho Photos

MSA PROFESSIONAL SERVICES
TRANSPORTATION • MUNICIPAL
DEVELOPMENT • ENVIRONMENTAL

Drafted - LSR, Date - 06-30-08, File - g:/projects/..Oakland

Figure 2.11

Town of Jefferson
Land Use Plan Map

May 3, 2010

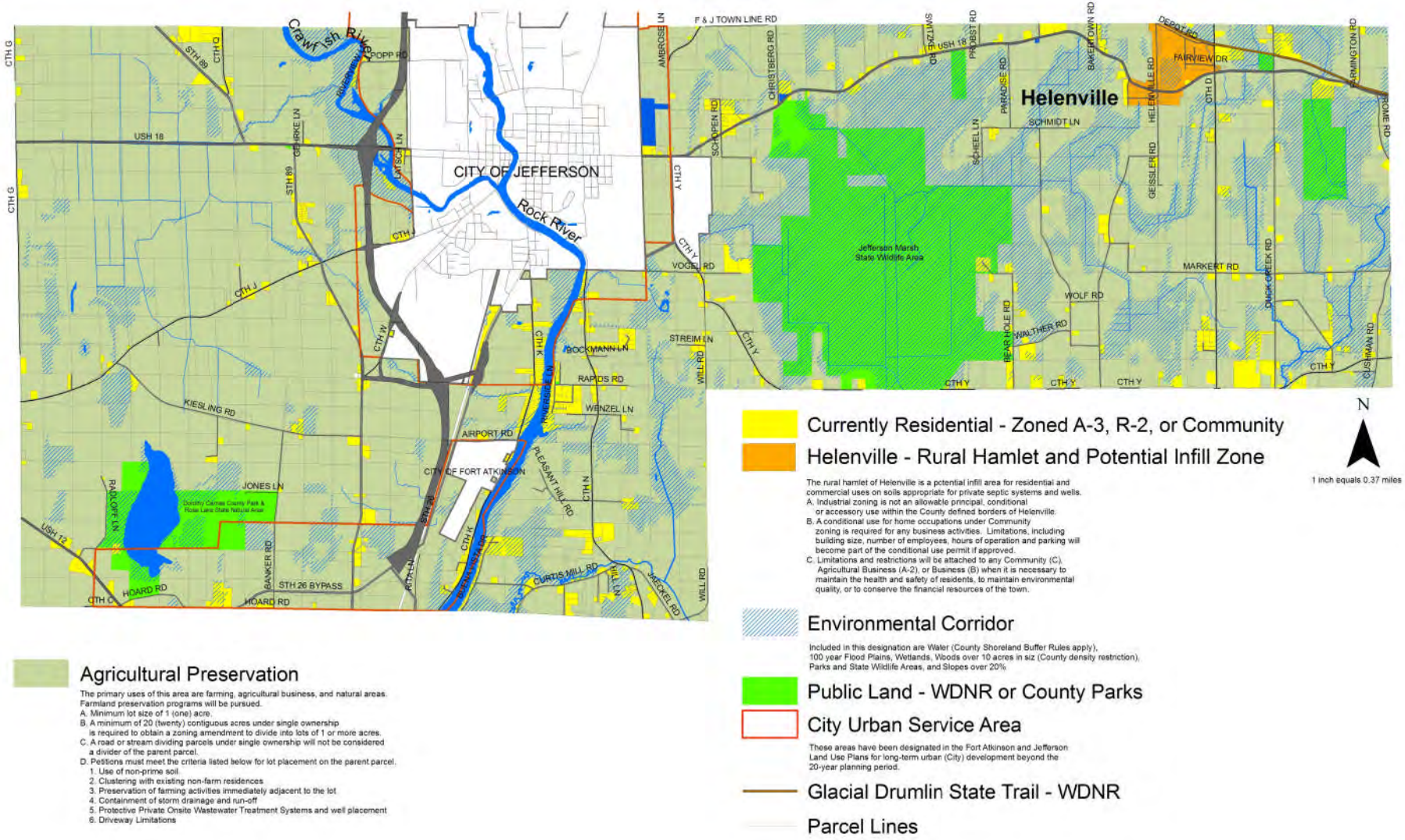

Figure 7.2

Town of Koshkonong Land Use Plan 2010-2030

Agricultural Preservation Policy Zone
Follow wthe Jefferson County Land Division Ordinances and Agricultural Preservation Plan with the exception of non-contiguous parcels less than 10 acres in size where only one A-3 rezoning may be allowed.

R-2 Zoned Rural Residential Policy Zone
Follow Jefferson County Land Division Ordinance.

Future Growth Area
R-2 zoning may be allowed for residential infill development on lots with a minimum size of 30,000 sq. ft. with private septic systems and wells. Follow Town of Koshkonong and Jefferson County Land Division Ordinances. Consider a transfer of development rights program to facilitate the movement of rural lots to this infill area and a conservation subdivison ordinance. Small commercial development that serves the neighborhood and recreational needs may be considered.

Future Growth Area Expansion
The Future Growth Area Expansion may be utilized if no land is available for infill in the Future Growth Area. This area historically has some business uses. Rezoning will follow Town of Koshkonong Land Division Ordinances. R-2 zoning may be allowed for residential infill development on lots with a minimum size of 30,000 sq. ft. with private septic systems and wells. Small commercial development that serves neighborhood and recreational needs on soils suitable for private septic systems and wells may be considered.

Potential Business Clusters
Commercial and industrial uses have historically been located within the business cluster areas and may be suitable areas for new small businesses and light manufacturing on private septic systems and wells pending rezoning.

Existing Parks and Wildlife Areas

Environmental Corridor Policy Zone
Follow Jefferson County rules and ordinances and institute a 75 ft. horizontal and 2 ft. vertical setback requirement for new construction from streams, rivers, lakes, and wetlands.

Fort Atkinson Urban Service Area 2008

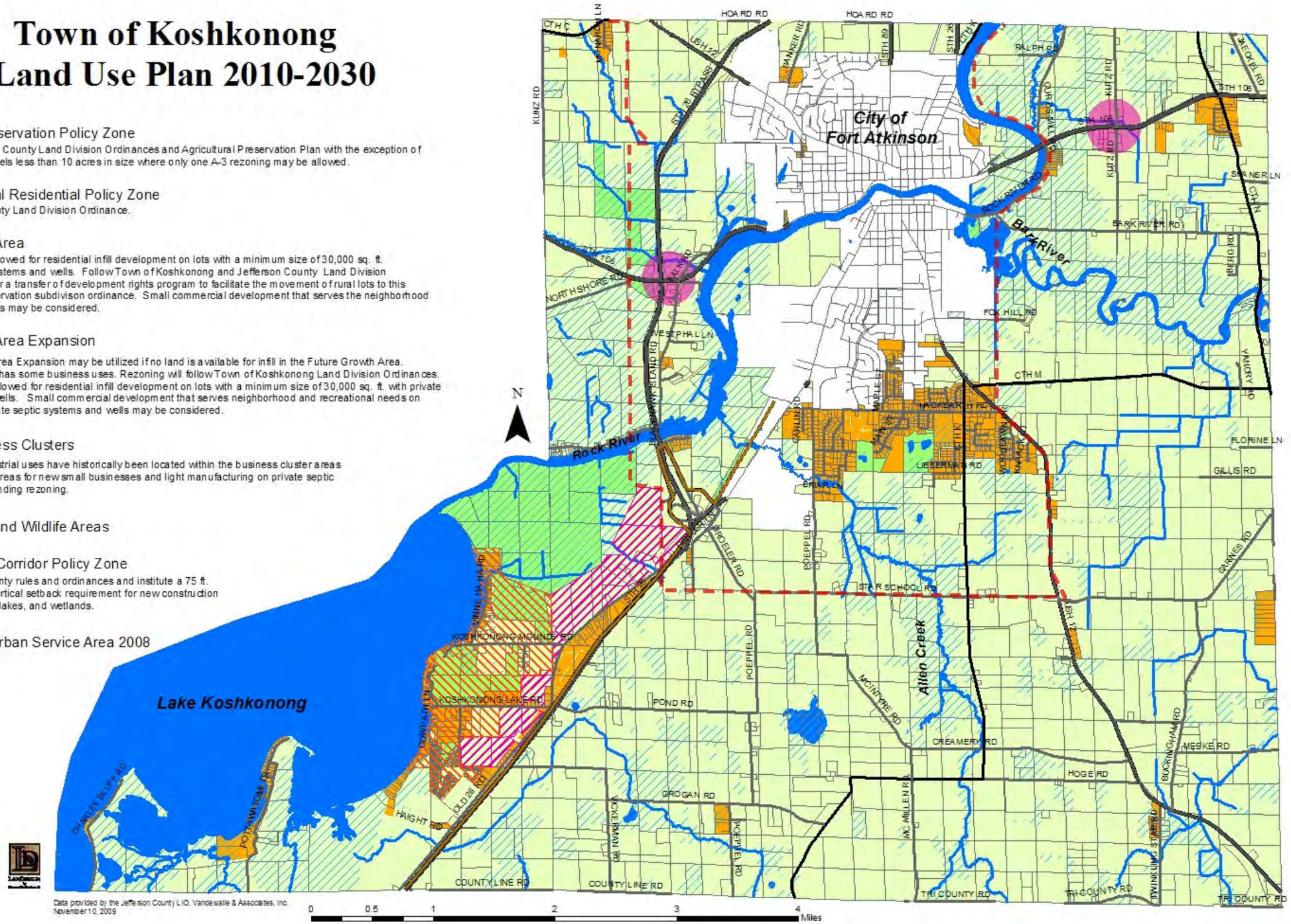

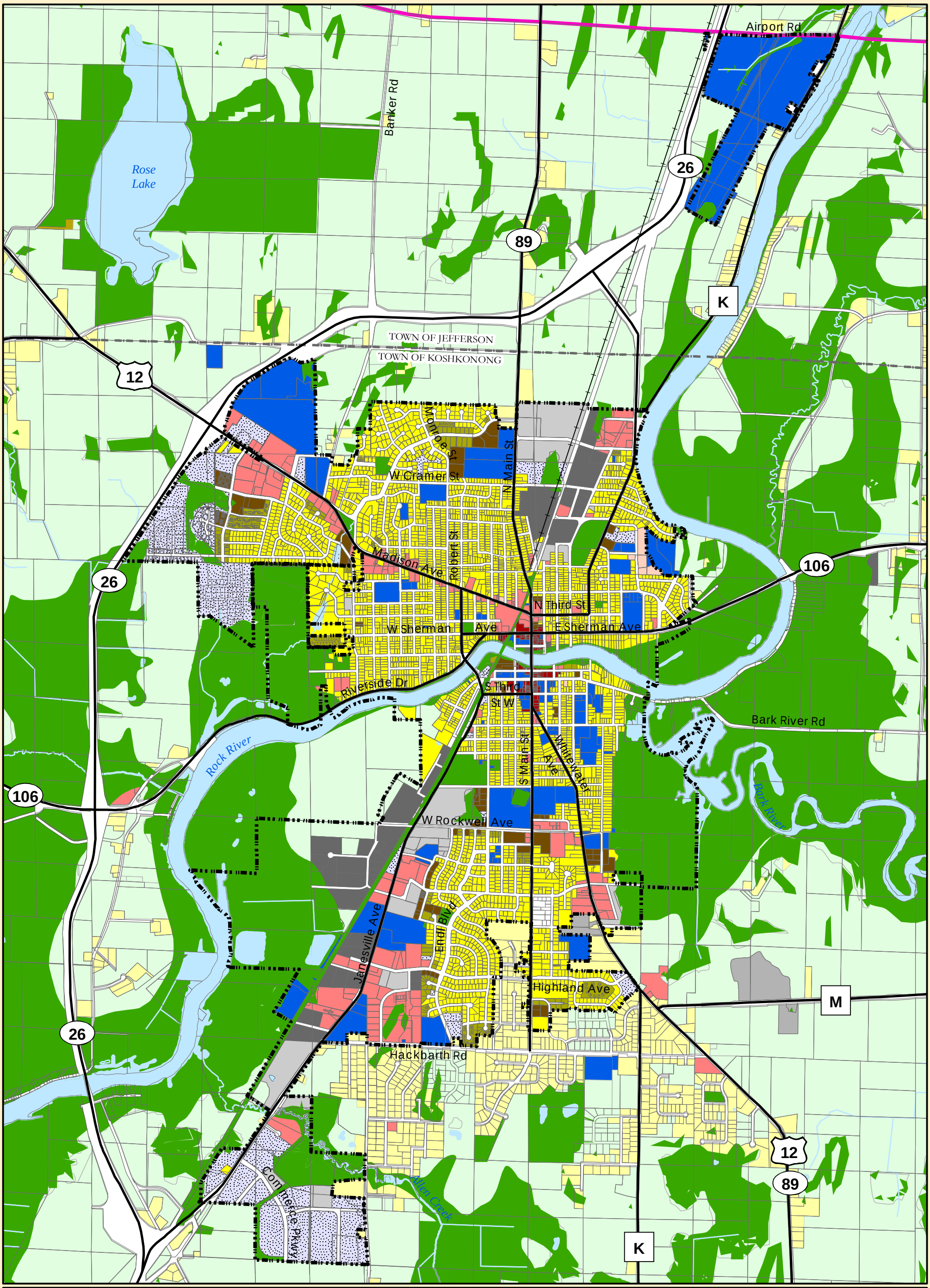

City of Fort Atkinson
Comprehensive Plan

Map 6:
Existing Land Use

- City Boundaries (2008)
- Town Boundaries
- Parcels
- Surface Water
- Agriculture/Rural
- Parks and Environmental Corridor
- Single Family Residential - Urban
- Single Family Residential - Exurban
- Two Family/Townhouse Residential
- Mixed Residential
- Neighborhood Commerical
- Community Commerical
- Downtown
- Light Industrial/Business Park
- General Industrial
- Community Facilities
- Vacant
- Right of Way

Sources: Jefferson County - County Land Use
Vandewalle and Associates - Fort Atkinson Land Use

0 0.125 0.25 0.5 0.75 Miles

Vandewalle & Associates
Planning - Creating - Rebuilding
© Vandewalle & Associates 2002

6/2/2008

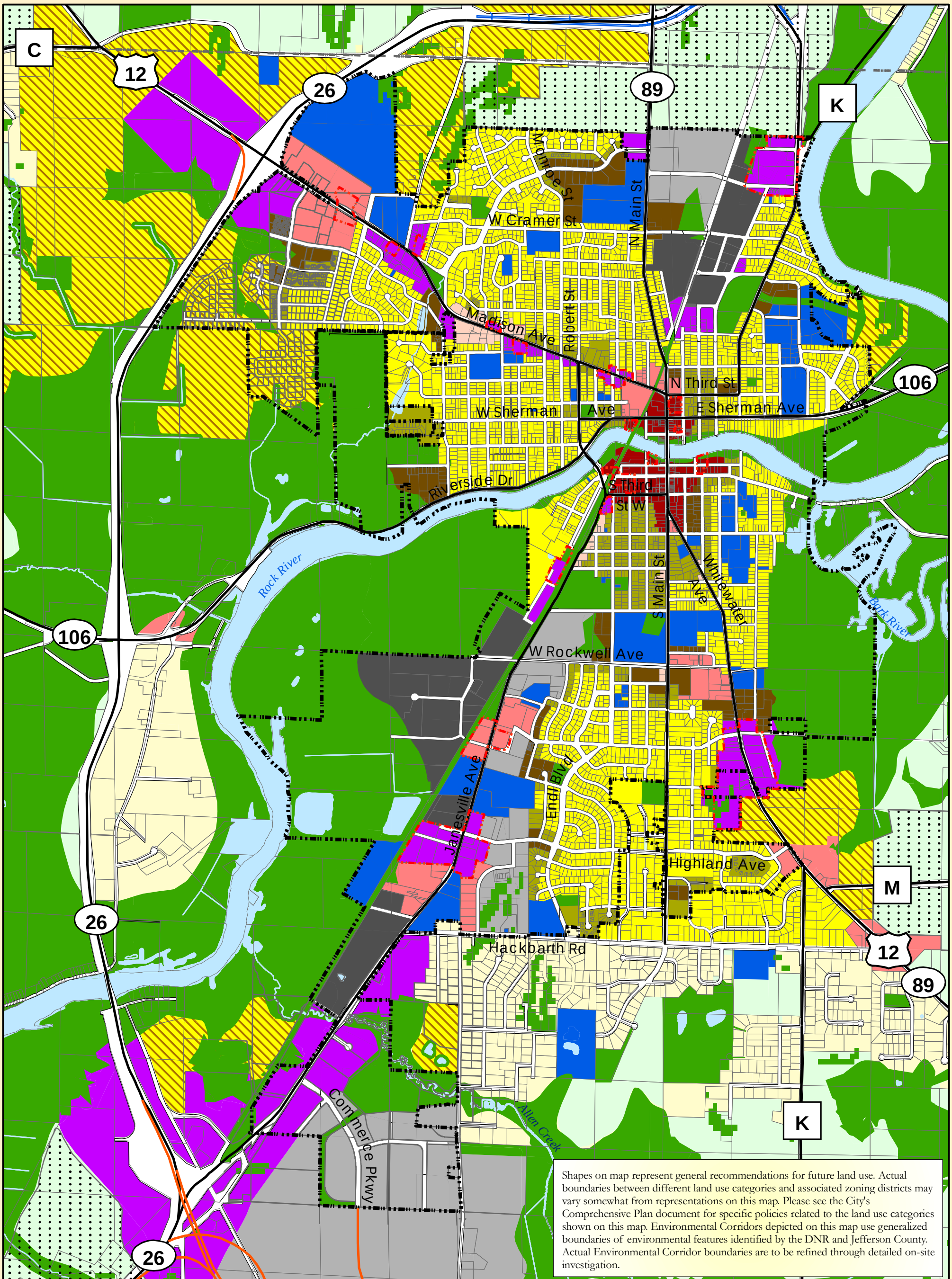

Shapes on map represent general recommendations for future land use. Actual boundaries between different land use categories and associated zoning districts may vary somewhat from representations on this map. Please see the City's Comprehensive Plan document for specific policies related to the land use categories shown on this map. Environmental Corridors depicted on this map use generalized boundaries of environmental features identified by the DNR and Jefferson County. Actual Environmental Corridor boundaries are to be refined through detailed on-site investigation.

City of Fort Atkinson
Comprehensive Plan

Map 7: City View

City Boundaries (2008)
Town Boundaries
Parcels
Right of Way
Major Roads
Planned Hwy 26 Bypass
Potential Hwy 12 Bypass

Future Land Use

Agriculture/Rural
Parks, Environmental Corridor, & Farm Preserve
Single Family Residential - Urban
Single Family Residential - Exurban
Two Family/Townhouse Residential
Mixed Residential
Planned Neighborhood
Neighborhood Commerical
Community Commerical
Downtown
Light Industrial/Business Park
General Industrial
Community Facilities
Planned Mixed Use
Long Range Urban Growth Area
Future Redevelopment Opportunity Area
Surface Water

Sources: Jefferson County - County Land Use; Vandewalle and Associates - Fort Atkinson Land Use

0 0.125 0.25 0.5 0.75 Miles

Vandewalle & Associates
Planning - Creating - Rebuilding
© Vandewalle & Associates 2002

6/2/2008

Shapes on map represent general recommendations for future land use. Actual boundaries between different land use categories and associated zoning districts may vary somewhat from representations on this map. Please see the City's Comprehensive Plan document for specific policies related to the land use categories shown on this map. Environmental Corridors depicted on this map use generalized boundaries of environmental features identified by the DNR and Jefferson County. Actual Environmental Corridor boundaries are to be refined through detailed on-site investigation.

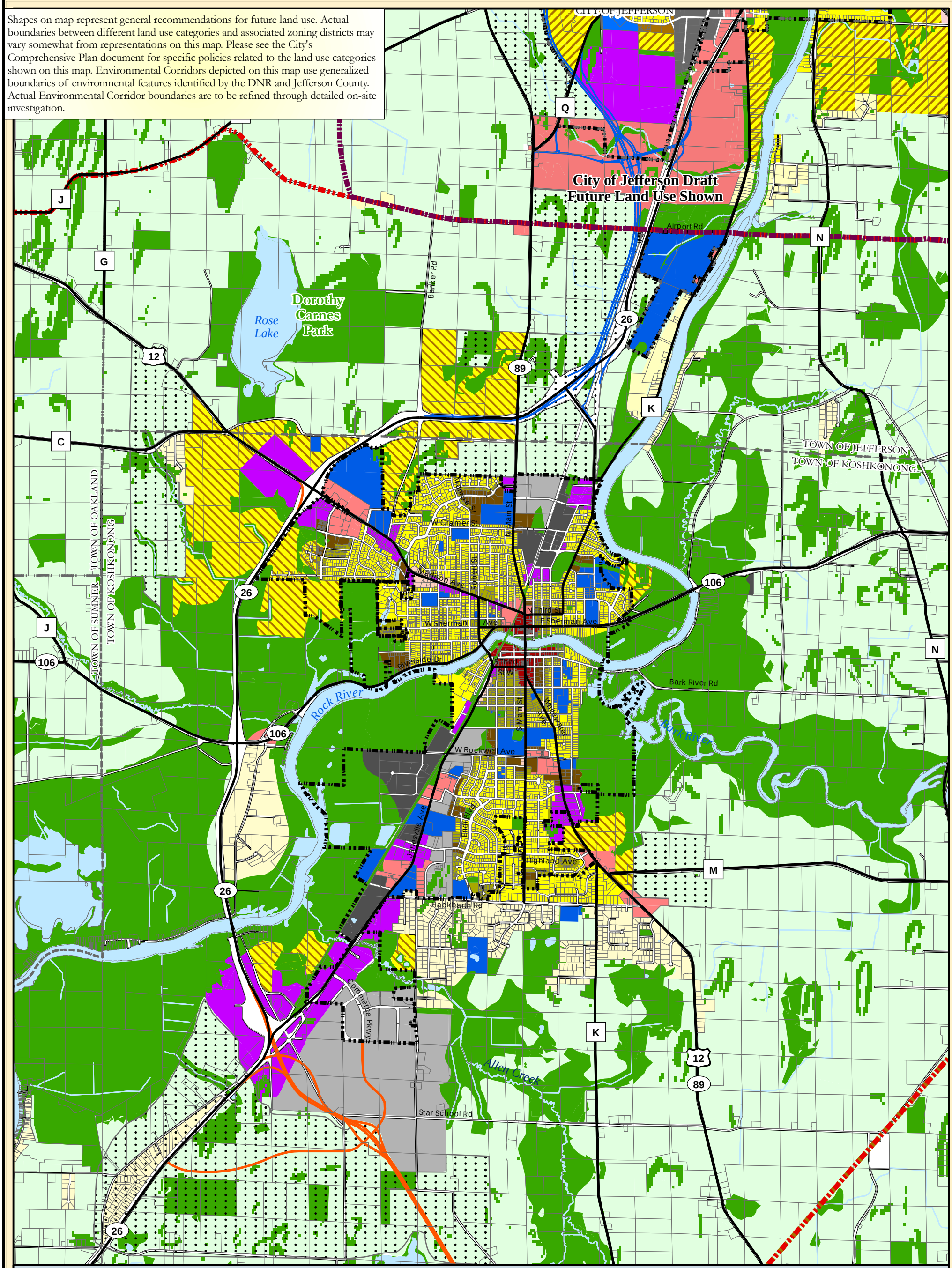

City of Fort Atkinson
Comprehensive Plan

Map 8: ETJ View

Future Land Use

- City Boundaries (2008)
- Town Boundaries
- Fort Atkinson Extraterritorial Boundary
- City of Jefferson Extraterritorial Boundary
- City of Whitewater Extraterritorial Boundary
- Parcels
- Major Roads
- Potential Hwy 12 Bypass
- Planned Hwy 26 Bypass
- Agriculture/Rural
- Parks, Environmental Corridor, & Farm Preserve
- Single Family Residential - Urban
- Single Family Residential - Exurban
- Two Family/Townhouse Residential
- Mixed Residential
- Planned Neighborhood
- Neighborhood Commerical
- Community Commerical
- Downtown
- Light Industrial/Business Park
- General Industrial
- Community Facilities
- Planned Mixed Use
- Long Range Urban Growth Area
- Surface Water

Sources: Jefferson County - County Land Use; Vandewalle and Associates - Fort Atkinson Land Use

0 0.25 0.5 1 Miles

6/2/2008

Vandewalle & Associates
Planning - Creating - Rebuilding
© Vandewalle & Associates 2002

Appendix K Digital Appendix

(Available for viewing at the WisDOT Southwest Region Office.)