Table of Contents

14.1 Introduction 7
14.1.1 Wall Development Process 7
14.1.1.1 Wall Numbering System 8
14.2 Wall Types 10
14.2.1 Gravity Walls 11
14.2.1.1 Mass Gravity Walls 11
14.2.1.2 Semi-Gravity Walls 11
14.2.1.3 Modular Gravity Walls 12
14.2.1.3.1 Modular Block Gravity Walls 12
14.2.1.3.2 Prefabricated Bin, Crib and Gabion Walls 12
14.2.1.4 Rock Walls 13
14.2.1.5 Mechanically Stabilized Earth (MSE) Walls: 13
14.2.1.6 Soil Nail Walls 13
14.2.2 Non-Gravity Walls 15
14.2.2.1 Cantilever Walls 15
14.2.2.2 Anchored Walls 15
14.2.3 Tiered and Hybrid Wall Systems 16
14.2.4 Temporary Shoring 17
14.2.5 Wall Classification Chart 17
14.3 Wall Selection Criteria 20
14.3.1 General 20
14.3.1.1 Project Category 20
14.3.1.2 Cut vs. Fill Application 20
14.3.1.3 Site Characteristics 21
14.3.1.4 Miscellaneous Design Considerations 21
14.3.1.5 Right of Way Considerations 21
14.3.1.6 Utilities and Other Conflicts 22
14.3.1.7 Aesthetics 22
14.3.1.8 Constructability Considerations 22
14.3.1.9 Environmental Considerations 22
14.3.1.10 Cost 22
14.3.1.11 Mandates by Other Agencies 23

14.3.1.12 Requests made by the Public 23
14.3.1.13 Railing 23
14.3.1.14 Traffic barrier 23
14.3.2 Wall Selection Guide Charts 23
14.4 General Design Concepts 26
14.4.1 General Design Steps 26
14.4.2 Design Standards 27
14.4.3 Design Life 27
14.4.4 Subsurface Exploration 27
14.4.5 Load and Resistance Factor Design Requirements 28
14.4.5.1 General 28
14.4.5.2 Limit States 28
14.4.5.3 Design Loads 29
14.4.5.4 Earth Pressure 29
14.4.5.4.1 Earth Load Surcharge 30
14.4.5.4.2 Live Load Surcharge 30
14.4.5.4.3 Compaction Loads 31
14.4.5.4.4 Wall Slopes 31
14.4.5.4.5 Loading and Earth Pressure Diagrams 31
14.4.5.5 Load factors and Load Combinations 40
14.4.5.6 Resistance Requirements and Resistance Factors 42
14.4.6 Material Properties 42
14.4.7 Wall Stability Checks 44
14.4.7.1 External Stability 44
14.4.7.2 Wall Settlement 48
14.4.7.2.1 Settlement Guidelines 48
14.4.7.3 Overall Stability 49
14.4.7.4 Internal Stability 49
14.4.7.5 Wall Embedment 49
14.4.7.6 Wall Subsurface Drainage 49
14.4.7.7 Scour 50
14.4.7.8 Corrosion 50
14.4.7.9 Utilities 50

14.4.7.10 Guardrail and Barrier 50
14.5 Cast-In-Place Concrete Cantilever Walls 51
14.5.1 General 51
14.5.2 Design Procedure for Cast-in-Place Concrete Cantilever Walls 51
14.5.2.1 Design Steps 52
14.5.3 Preliminary Sizing 53
14.5.3.1 Wall Back and Front Slopes 54
14.5.4 Unfactored and Factored Loads 54
14.5.5 External Stability Checks 55
14.5.5.1 Eccentricity Check 55
14.5.5.2 Bearing Resistance 55
14.5.5.3 Sliding 59
14.5.5.4 Settlement 60
14.5.6 Overall Stability 60
14.5.7 Structural Resistance 60
14.5.7.1 Stem Design 60
14.5.7.2 Footing Design 60
14.5.7.3 Shear Key Design 61
14.5.7.4 Miscellaneous Design Information 61
14.5.8 Design Tables for Cast-in-Place Concrete Cantilever Walls 63
14.5.9 Design Examples 63
14.5.10 Summary of Design Requirements 68
14.6 Mechanically Stabilized Earth Retaining Walls 70
14.6.1 General Considerations 70
14.6.1.1 Usage Restrictions for MSE Walls 70
14.6.2 Structural Components 71
14.6.2.1 Reinforced Earthfill Zone 72
14.6.2.2 Reinforcement: 73
14.6.2.3 Facing Elements 74
14.6.3 Design Procedure 79
14.6.3.1 General Design Requirements 79
14.6.3.2 Design Responsibilities 79
14.6.3.3 Design Steps 80

14.6.3.4 Initial Geometry 81
14.6.3.4.1 Wall Embedment 81
14.6.3.4.2 Wall Backslopes and Foreslopes 81
14.6.3.5 External Stability 82
14.6.3.5.1 Unfactored and Factored Loads 82
14.6.3.5.2 Sliding Stability 82
14.6.3.5.3 Eccentricity Check 83
14.6.3.5.4 Bearing Resistance 84
14.6.3.6 Vertical and Lateral Movement 85
14.6.3.7 Overall Stability 85
14.6.3.8 Internal Stability 86
14.6.3.8.1 Loading 86
14.6.3.8.2 Reinforcement Selection Criteria 87
14.6.3.8.3 Factored Horizontal Stress 88
14.6.3.8.4 Maximum Factored Tension Force 91
14.6.3.8.5 Reinforcement Pullout Resistance 91
14.6.3.8.6 Reinforced Design Strength 93
14.6.3.8.7 Calculate T_{al} for Inextensible Reinforcements 94
14.6.3.8.8 Calculate T_{al} for Extensible Reinforcements 94
14.6.3.8.9 Design Life of Reinforcements 95
14.6.3.8.10 Reinforcement /Facing Connection Design Strength 95
14.6.3.8.11 Design of Facing Elements 96
14.6.3.8.12 Corrosion 96
14.6.3.9 Wall Internal Drainage 96
14.6.3.10 Traffic Barrier 96
14.6.3.11 Design Example 96
14.6.3.12 Summary of Design Requirements 97
14.7 Modular Block Gravity Walls 100
14.7.1 Design Procedure for Modular Block Gravity Walls 100
14.7.1.1 Initial Sizing and Wall Embedment 101
14.7.1.2 External Stability 101
14.7.1.2.1 Unfactored and Factored Loads 101
14.7.1.2.2 Sliding Stability 101

14.7.1.2.3 Bearing Resistance 102
14.7.1.2.4 Eccentricity Check 102
14.7.1.3 Settlement 102
14.7.1.4 Overall Stability 103
14.7.1.5 Summary of Design Requirements 103
14.8 Prefabricated Modular Walls 105
14.8.1 Metal and Precast Bin Walls 105
14.8.2 Crib Walls 105
14.8.3 Gabion Walls 106
14.8.4 Design Procedure 106
14.8.4.1 Initial Sizing and Wall Embedment 107
14.8.5 Stability checks 107
14.8.5.1 Unfactored and Factored Loads 107
14.8.5.2 External Stability 108
14.8.5.3 Settlement 108
14.8.5.4 Overall Stability 108
14.8.5.5 Structural Resistance 109
14.8.6 Summary of Design Safety Factors and Requirements 109
14.9 Soil Nail Walls 111
14.9.1 Design Requirements 111
14.10 Steel Sheet Pile Walls 113
14.10.1 General 113
14.10.2 Sheet Piling Materials 113
14.10.3 Driving of Sheet Piling 114
14.10.4 Pulling of Sheet Piling 114
14.10.5 Design Procedure for Sheet Piling Walls 114
14.10.6 Summary of Design Requirements 117
14.11 Soldier Pile Walls 119
14.11.1 Design Procedure for Soldier Pile Walls 119
14.11.2 Summary of Design Requirements 120
14.12 Temporary Shoring 122
14.12.1 When Slopes Won't Work 122
14.12.2 Plan Requirements 122

14.12.3 Shoring Design/Construction 122
14.13 Noise Barrier Walls 123
14.13.1 Wall Contract Process 123
14.13.2 Pre-Approval Process 125
14.14 Contract Plan Requirements 126
14.15 Construction Documents 127
14.15.1 Bid Items and Method of Measurement 127
14.15.2 Special Provisions 127
14.16 Submittal Requirements for Pre-Approval Process 129
14.16.1 General 129
14.16.2 General Requirements 129
14.16.3 Qualifying Data Required For Approval 129
14.16.4 Maintenance of Approval Status as a Manufacturer 130
14.16.5 Loss of Approved Status 131
14.17 References 132
14.18 Design Examples 133

14.1 Introduction

Retaining walls are used to provide lateral resistance for a mass of earth or other material to accommodate a transportation facility. These walls are used in a variety of applications including right-of-way restrictions, protection of existing structures that must remain in place, grade separations, new highway embankment construction, roadway widening, stabilization of slopes, protection of environmentally sensitive areas, staging, and temporary support including excavation or underwater construction support, etc.

Several types of retaining wall systems are available to retain earth and meet specific project requirements. Many of these wall systems are proprietary wall systems while others are non-proprietary or design-build in Wisconsin. The wall selection criteria and design policies presented in this chapter are to ensure consistency of standards and applications used throughout WisDOT projects.

WisDOT policy item:

Retaining walls (such as MSE walls with precast concrete panel facing) that are susceptible to damage from vehicular impact shall be protected by a roadway barrier.

14.1.1 Wall Development Process

Overall, the wall development process requires an iterative collaboration between WisDOT Regions, Structures Design Section, Geotechnical Engineering Unit and WisDOT Consultants.

Retaining wall development is described in Section 11-55-5 of the *Facilities Development Manual*. WisDOT Regional staff determines the need for permanent retaining walls on highway projects. A wall number is assigned as per criteria discussed in 14.1.1.1 of this chapter. The Regional staff prepares a Structures Survey Report (SSR) that includes a preliminary evaluation of wall type, location, and height including a preliminary layout plan.

Based on the SSR, a Geotechnical site investigation (see Chapter 10 – Geotechnical Investigation) may be required to determine foundation and retained soil properties. A hydraulic analysis is also conducted, if required, to asses scour potential. The Geotechnical investigation generally includes a subsurface and laboratory investigation. For the departmental-designed walls, the Bureau of Technical Services, Geotechnical Engineering Unit can recommend the scope of soil exploration needed and provide/recommend bearing resistance, overall stability, and settlement of walls based on the geotechnical exploration results. These Geotechnical recommendations are presented in a Site Investigation Report.

The SSR is sent to the wall designer (Structures Design Section or WisDOT's Consultant) for wall selection, design and contract plan preparation. Based on the wall selection criteria discussed in 14.3, either a proprietary or a non-proprietary wall system is selected.

Proprietary walls, as defined in 14.2, are pre-approved by the WisDOT's Bureau of Structures. Preapproval process for the proprietary walls is explained in 14.16. The structural design, internal and final external stability of proprietary wall systems are the responsibility of the supplier/contractor. The design and shop drawing computations of the proprietary wall systems

are also reviewed by the Bureau of Structures in accordance with the plans and special provisions. The preliminary external stability, overall stability and settlement computations of these walls are performed by the Geotechnical Engineering Unit or the WisDOT's Consultant in the project design phase. Design and shop drawings must be accepted by the Bureau of Structures prior to start of the construction. Design of all temporary walls is the responsibility of the contractor.

Non-proprietary retaining walls are designed by WisDOT or its Consultant. The internal stability and the structural design of such walls are performed by the Structures Design Section or WisDOT's Consultant. The external and overall stability is performed by the Geotechnical Engineering Unit or Geotechnical Engineer of record.

The final contract plans of retaining walls include final plans, details, special provisions, contract requirements, and cost estimate for construction. The Subsurface Exploration sheet depicting the soil borings is part of the final contract plans.

The wall types and wall selection criteria to be used in wall selection are discussed in 14.2 and 14.3 of this chapter respectively. General design concepts of a retaining wall system are discussed in 14.4. Design criteria for specific wall systems are discussed in sections 14.5 thru 14.11. The plan preparation process is briefly described in Chapter 2 – General and Chapter 6 – Plan Preparation. The contract documents and contract requirements are discussed in 14.14 and 14.15 respectively.

For further information related to wall selection, design, approval process, pre-approval and review of proprietary wall systems please contact Structures Design Section of the Bureau of Structures at 608-266-8489. For questions pertaining to geotechnical analyses and geotechnical investigations please contact the Geotechnical Engineering Unit at 608-246-7940.

14.1.1.1 Wall Numbering System

Permanent retaining walls that are designed for a design life of 75 years or more should be identified by a wall number, R-XX-XXX, as assigned by the Region unless otherwise specified below. For a continuous wall consisting of various wall types, the numbering system should include unit numbers so that the numbering appears as R-XX-XXX-001, R-XX-XXX-002, and so on. The first two digits represent the county the wall is located in and the next set(s) of digits represent the undivided wall.

Retaining walls whose height exceeds the following criteria require R numbers:

- <u>Proprietary retaining walls</u> (e.g., modular block MSE walls)
    - MSE walls having a maximum height of less than 5.5 ft. measured from the bottom of wall or top of leveling pad to top of wall are deemed to be "minor retaining walls" and do not require an R number. Refer to *FDM 11-55-5.2* for more information.
    - Modular block gravity walls having a maximum height of less than 4.0 ft. measured from the bottom of wall or top of leveling pad to top of wall are deemed to be "minor

retaining walls" and do not require an R number. Refer to *FDM 11-55-5.2* for more information.

- Non-proprietary walls (e.g., sheet pile walls):
  - Walls having an exposed height of less than 5.5 ft. measured from the plan ground line to top of wall may require an R number based on specific project features. Designer to contact the Bureau of Structures region liaison for more information.

Cast-in-place walls being utilized strictly as bridge abutment or box culvert wings do not require R numbers as they are considered part of the structure.

14.2 Wall Types

Retaining walls can be divided into many categories as discussed below.

Conventional Walls

Retaining walls can be divided into gravity, semi-gravity, and non-gravity cantilever or anchored walls. A brief description of these walls is presented in 14.2.1 and 14.2.2 respectively.

Miscellaneous types of walls including multi-tiered walls, and hybrid or composite walls are also used by combining the wall types mentioned in the previous paragraph. These walls are used only under special project requirements. These walls are briefly discussed in 14.2.3, but the design requirements of these walls will not be presented in this chapter. In addition, some walls are also used for temporary shoring and discussed briefly in 14.2.4.

Permanent or Temporary Walls

All walls can be divided into permanent or temporary walls, depending on project application. Permanent walls have a typical designed life of 75 years. The temporary walls are designed for a service life of 3 years, or the intended project duration, whichever is greater. Temporary wall systems have less restrictive requirements for construction, material and aesthetics.

Fill Walls or Cut Walls

A retaining wall can also be classified as a fill wall, or a cut wall. This description is based on the nature of the earthwork required to construct the wall. If the roadway cross-sections (which include the wall) indicate that existing earth/soil must be removed (excavated) to install the wall, it is considered a 'cut' wall. If the roadway cross-sections indicate that earth fill will be placed behind the wall, with little excavation, the wall is considered a 'fill' wall. Sometimes wall construction requires nearly equal combinations of earth excavation and earth fill, leading to the nomenclature of a 'cut/fill' wall.

Bottom-up or Top-down Constructed Walls

This wall classification method refers to the method in which a wall is constructed. If a wall is constructed from the bottom of the wall, upward to the top, it is considered a bottom-up type of wall. Examples of this include CIP cantilever, MSE and modular block walls. Bottom-up walls are generally the most cost effective type. If a wall is constructed downward, from the top of the wall to the bottom, it is considered a top-down type of wall. This generally requires the insertion of some type of wall support member below the existing ground, and then excavation in front of the wall to the bottom of the exposed face. Examples of this include soil nail, soldier pile, cantilever sheet pile and anchored sheet pile walls. These walls are generally used when excavation room is limited.

Proprietary or Non-Proprietary

Some retaining walls have prefabricated modules or components that are proprietary in nature. Based on the use of proprietary components, walls can be divided into the categories of proprietary and non-proprietary wall systems as defined in 14.1.1.

A proprietary retaining wall system is considered as a patented or trademarked retaining wall system or a wall system comprised of elements/components that are protected by a trade name, brand name, or patent and are designed and supported by the manufacturer. MSE walls, modular block gravity walls, bin, and crib walls are considered proprietary walls because these walls have components which are either patented or have trademarks.

Proprietary walls require preapproval and appropriate special provisions. The preapproval requirements are discussed in 14.16 of this chapter. Proprietary walls also have special design requirements for the structural components, and are discussed in further detail within each specific wall design section. Most MSE, modular block, bin or crib walls require pre-approval and/or special provisions.

A non-proprietary retaining wall is fully designed and detailed by the designer or may be design-build. A non-proprietary retaining wall system may contain proprietary elements or components as well as non-proprietary elements and components. CIP cantilever walls, rock walls, soil nail walls and non-gravity walls fall under this category.

Wall classification is shown in Table 14.2-1 and is based on wall type, project function category, and method of construction.

14.2.1 Gravity Walls

Gravity walls are considered externally stabilized walls as these walls use self weight to resist lateral pressures due to earth and water. Gravity walls are generally subdivided into mass gravity, semi-gravity, modular gravity, mechanically stabilized reinforced earth (MSE), and in-situ reinforced earth wall (soil nailing) categories. A schematic diagram of the various types of gravity walls is included in Figure 14.2-1.

14.2.1.1 Mass Gravity Walls

A mass gravity wall is an externally stabilized, cast-in-place rigid gravity wall, generally trapezoidal in shape. The construction of these walls requires a large quantity of materials so these are rarely used except for low height walls less than 8.0 feet. These walls mainly rely on self-weight to resist external pressures and their construction is staged as bottom up construction, mostly in fill or cut/fill situations.

14.2.1.2 Semi-Gravity Walls

Semi-gravity walls resist external forces by the combined action of self-weight, weight of soil above footing and the flexural resistance of the wall components. A cast-in-place (CIP) concrete cantilever wall is an example and consists of a reinforced concrete stem and a base footing. These walls are non-proprietary.

Cantilever walls are best suited for use in areas exhibiting good bearing material. When bearing or settlement is a problem, these walls can be founded on piles or foundation improvement may be necessary. The use of piles significantly increases the cost of these walls. Walls exceeding 28 feet in height are provided with counter-forts or buttress slabs. Construction of these walls is staged as bottom-up construction and mostly constructed in fill situations. Cantilever walls are more suited where MSE walls are not feasible, although these walls are generally costlier than MSE walls.

14.2.1.3 Modular Gravity Walls

Modular walls are also known as externally stabilized gravity walls as these walls resist external forces by utilizing self-weight. Modular walls have prefabricated modules/components which are considered proprietary. The construction is bottom-up construction mostly used in fill situations.

14.2.1.3.1 Modular Block Gravity Walls

Modular block concrete facings are used without soil reinforcement to function as an externally stabilized gravity wall. The modular blocks are prefabricated dry cast or wet cast concrete blocks and the blocks are stacked vertically or slightly battered to resist external forces. The concrete blocks are either solid concrete or hollow core concrete blocks. The hollow core concrete blocks are filled with crushed aggregates or sand. Modular block gravity walls are limited to a maximum design height of 8 feet under optimum site geometry and soils conditions, but site conditions generally dictate the need for MSE walls when design heights are greater than 5.5 feet. Walls with a maximum height of less than 4 feet are deemed as “minor retaining walls” and do not require an R number. Refer to *FDM 11-55-5.2* for more information. The modular blocks are proprietary and vary in sizes.

14.2.1.3.2 Prefabricated Bin, Crib and Gabion Walls

Bin Walls: Concrete and metal bin walls are built of adjoining open or closed faced bins and then filled with soil/rocks. Each metal bin is comprised of individual members bolted together. The concrete bin wall is comprised of prefabricated interlocking concrete modules. These wall systems are proprietary wall systems.

Crib Walls: Crib walls are constructed of interlocking prefabricated units of reinforced or unreinforced concrete or timber elements. Each crib is comprised of longitudinal and transverse members. Each unit is filled with free draining material. These wall systems are proprietary wall systems.

Gabion Walls**:** Gabion walls are constructed of steel wire baskets filled with selected rock fragments and tied together. Gabions walls are flexible, free draining and easy to construct. These wall systems are proprietary wall systems. Maximum heights are normally less than 21 feet. These walls are desirable where equipment access is limited. The wires used for constructing gabions baskets must be designed with adequate corrosion protection.

14.2.1.4 Rock Walls

Rock walls are also known as 'Rockery Walls'. These types of gravity walls are built by stacking locally available large stones or boulders into a trapezoid shape. These walls are highly flexible and height of these walls is generally limited to approximately 8.0 feet. A layer of gravel and geotextile is commonly used between the stones and the retained soil. These walls can be designed using the *FHWA Rockery Design and Construction Guideline*.

14.2.1.5 Mechanically Stabilized Earth (MSE) Walls:

Mechanically Stabilized Earth (MSE) walls include a selected soil mass reinforced with metallic or geosynthetic reinforcement. The soil reinforcement is connected to a facing element to prevent the reinforced soil from sloughing. Construction of these walls is staged as bottom-up construction. These can be constructed in cut and fill situations, but are better suited to fill sites. MSE walls are normally used for wall heights between 10 to 40 feet. A brief description of various types of MSE walls is given below:

Precast Concrete Panel MSE Walls: These types of walls employ a metallic strip or wire grid reinforcement connected to precast concrete panels to reinforce a selected soil mass. The concrete panels are usually 5'x5' or 5'x10' size panels. These walls are proprietary wall systems.

Modular Block Facing MSE Wall: Prefabricated modular concrete block walls consist of almost vertically stacked concrete modular blocks and the soil reinforcement is secured between the blocks at predetermined levels. Metallic strips or geogrids are generally used as soil reinforcement to reinforce the selected soil mass. Concrete blocks are either solid or hollow core blocks, and must meet freeze/thaw requirements. The hollow core blocks are filled with aggregates or sand. These types of walls are proprietary wall systems.

Geotextile/Geogrids/Welded Wire Faced MSE Walls: These types of MSE walls consist of compacted soil layers reinforced with continuous or semi-continuous geotextile, geogrid or welded wire around the overlying reinforcement. The wall facing is formed by wrapping each layer of reinforcement around the overlying layer of backfill and re-embedding the free end into the backfill. These types of walls are used for temporary or permanent applications. Permanent facings include shotcrete, gunite, galvanized welded wire mesh, cast-in-place concrete or prefabricated concrete panels.

14.2.1.6 Soil Nail Walls

Soil nail walls are internally stabilized cut walls that use in-situ reinforcement for resisting earth pressures. The large diameter rebars (generally #10 or greater) are typically used for the reinforcement. The construction of soil nail walls is staged top-down and soil nails are installed after each stage of excavation. Shotcrete can be applied as a facing. The facing of a soil nail wall is typically covered with vertical drainage strips located over the nail then covered with shotcrete. Soil nail walls are used for temporary or permanent construction. Specialty contractors are required when constructing these walls. Soil nail walls have been installed to heights of 60.0 feet or more but there have only been a limited number of soil nail walls constructed on WisDOT projects.

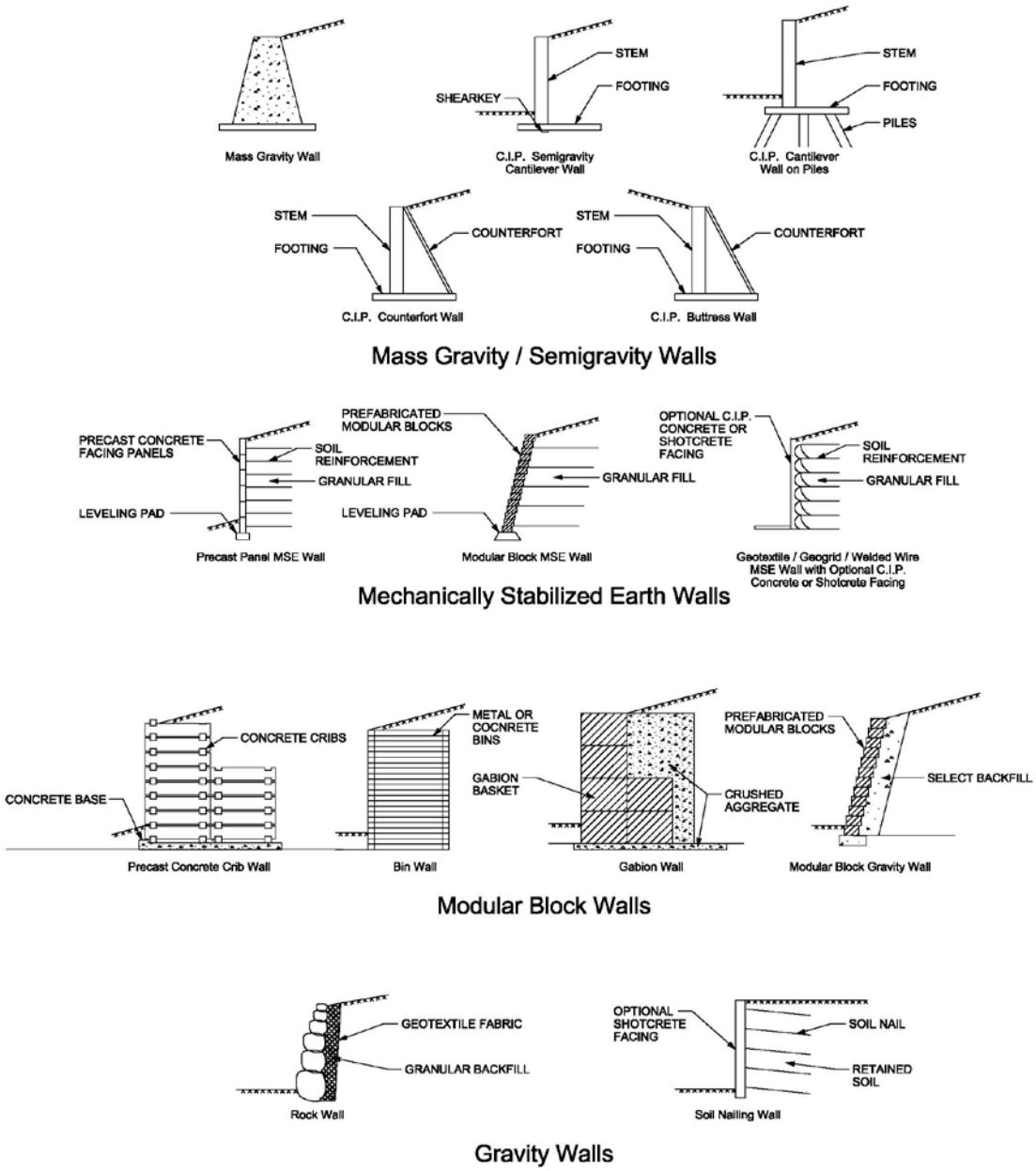

Figure 14.2-1
Gravity Walls

14.2.2 Non-Gravity Walls

Non-gravity walls are classified into cantilever and anchored wall categories. These walls are considered as externally stabilized walls and generally used in cut situations. The walls include sheet pile, soldier pile, tangent and secant pile type with or without anchors. Figure 14.2-2 shows common types of non-gravity walls.

14.2.2.1 Cantilever Walls

These types of walls derive lateral resistance through embedment of vertical elements into natural ground and the flexure resistance of the structural members. They are used where excavation support is needed in shallow cut situations.

Cantilever Sheet Pile Walls: Cantilever sheet pile walls consist of interlocking steel panels, driven into the ground to form a continuous sheet pile wall. The sheet piles resist the lateral earth pressure utilizing the passive resistance in front of the wall and the flexural resistance of the sheet pile. Most sheet pile walls are less than 15 feet in height.

Soldier Pile Walls: A soldier pile wall derives lateral resistance and moment capacity through embedment of vertical members (soldier piles) into natural ground usually in cut situations. The vertical elements (usually H piles) may be drilled or driven steel or concrete members. The soil behind the wall is retained by lagging. The lagging may be steel, wood, or concrete. For permanent walls, wall facings are usually constructed of either cast-in-place concrete or precast concrete panels (prestressed, if needed) that extend between vertical elements. Solider pile walls that use precast panels and H piles are also known as post-and-panel walls. Soldier pile walls can also be constructed from the bottom-up. These walls should be considered when minimizing disturbance to the site is critical, such as environmental and/or construction procedures. Soldier pile walls are also suitable for sites where rock is encountered near the surface, since holes for the piles can be drilled/prebored into the rock.

Tangent and Secant Pile Walls: A tangent pile wall consists of a single row of drilled shafts (bored piles) installed in the ground. Each pile touches the adjacent pile tangentially. The concrete piles are reinforced using a single steel beam or a steel reinforcement cage. A secant wall, similar to a tangent pile wall, consists of overlapping adjacent piles. All piles generally contain reinforcement, although alternating reinforced piles may be necessary. Secant and tangent wall systems are used to hold earth and water where water tightness is important, and lowering of the water table is not desirable. To improve wall water tightness, additional details can used to minimize water seepage.

14.2.2.2 Anchored Walls

Anchored walls are externally stabilized non-gravity cut walls. Anchored walls are essentially the same as cantilever walls except that these walls utilize anchors (tiebacks) to extend the wall heights beyond the design limit of the cantilever walls. These walls require less toe embedment than cantilever walls.

These walls derive lateral resistance by embedment of vertical wall elements into firm ground and by anchorages. Most commonly used anchored walls are anchored sheet pile walls and

soldier pile walls. Tangent and secant walls can also be anchored with tie backs and used as anchored walls. The anchors can be attached to the walls by tie rods, bars or wire tendons. The anchoring device is generally a deadman, screw-type, or grouted tieback anchor. Anchored walls can be built to significant heights using multiple rows of anchors.

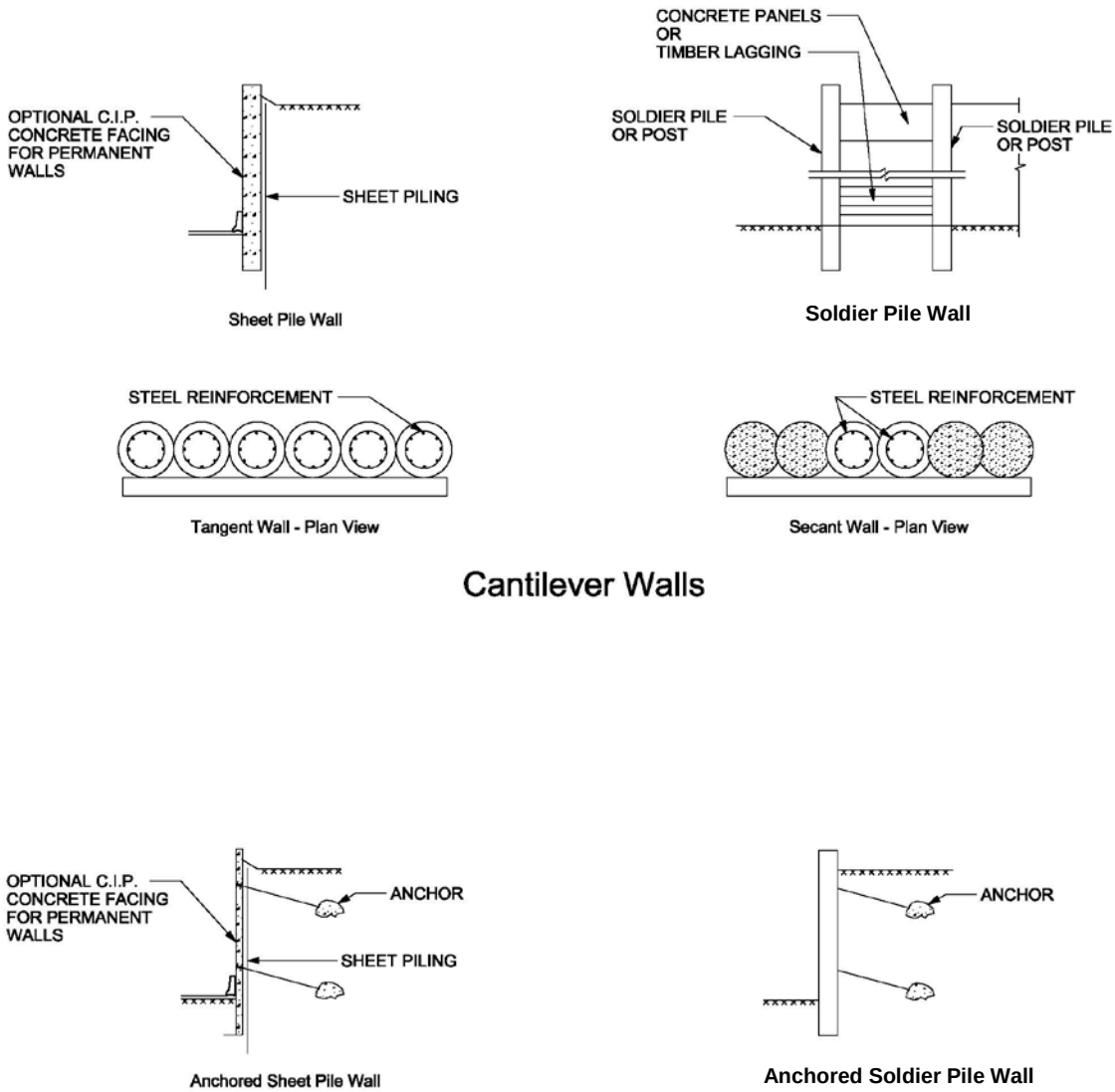

Figure 14.2-2
Non-Gravity Walls

14.2.3 Tiered and Hybrid Wall Systems

A tiered wall system is a series of two or more walls, with each wall set back from the underlying walls. The upper wall exerts an additional surcharge on the lower lying wall and requires

special design attention. The design of these walls has not been discussed in this chapter. Hybrids wall systems combine wall components from two or more different wall systems and provide an alternative to a single type of wall used in cut or fill locations. These types of walls require special design attention as components of these walls require different magnitudes of deformation to develop loading resistance. The design of such walls will be on a case-by-case basis, and is not discussed in this chapter.

Some examples of tiered and hybrid walls systems are shown in Figure 14.2-3.

14.2.4 Temporary Shoring

Temporary shoring is used to protect existing transportation facilities, utilities, buildings, or other critical features when safe slopes cannot be made for structural excavations. Shoring may be required within the limits of structures or on the approach roadway due to grade changes or staged construction. Shoring should not be required nor paid for when used primarily for the convenience of the contractor. Temporary shoring is designed by the contractor and may consist of a wall system, or some other type of support. MSE walls with flexible facings and sheet pile walls are commonly used for temporary shoring.

14.2.5 Wall Classification Chart

A wall classification chart has been developed and shown as Table 14.2-1.

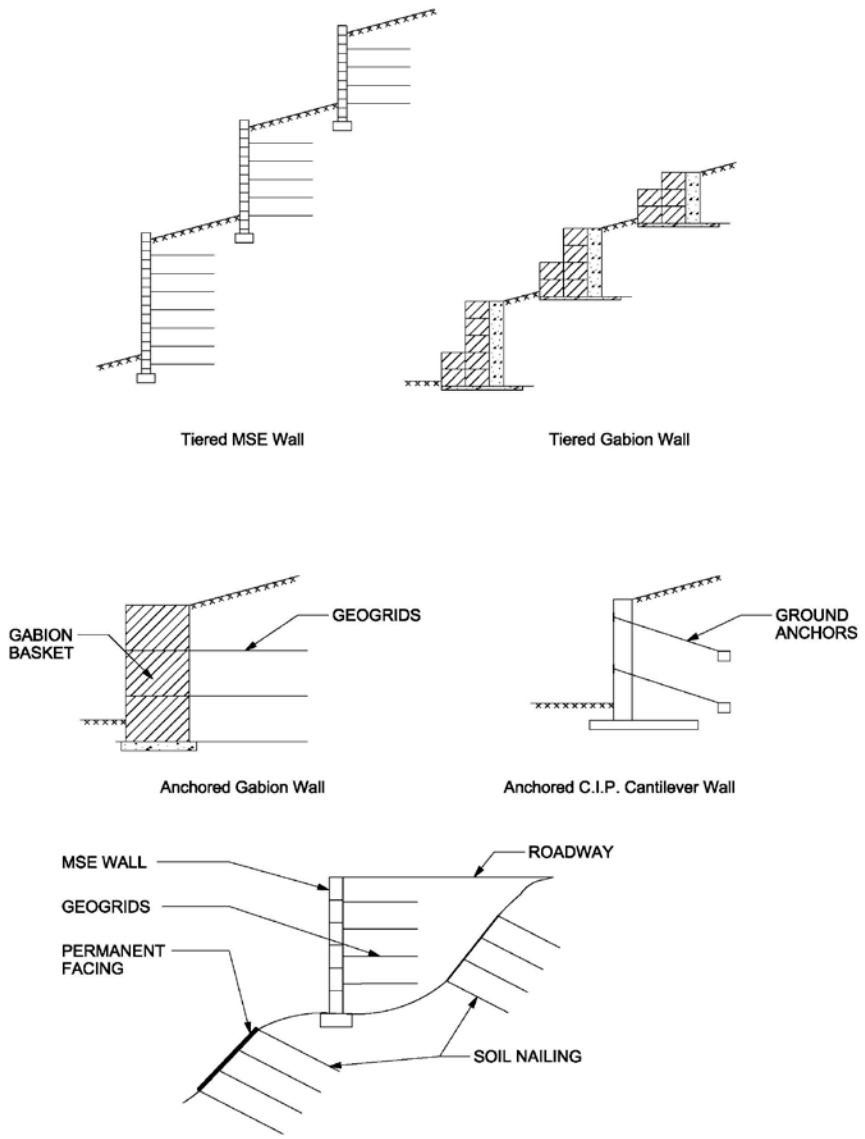

Figure 14.2-3
Tiered & Hybrid Wall Systems

Wall Category	Wall Sub-Category	Wall Type	Typical Construction Concept	Proprietary
Gravity	Mass Gravity	CIP Concrete Gravity	Bottom Up (Fill)	No
	Semi-Gravity	CIP Concrete Cantilever	Bottom Up (Fill)	No
	Reinforced Earth	MSE Walls: • Precast Panels • Modular Blocks • Geogrid/ Geo-textile/Wire- Faced	Bottom Up (Fill)	Yes
	Modular Gravity	Modular Blocks, Gabion, Bin, Crib	Bottom Up (Fill)	Yes
	In-situ Reinforced	Soil Nailing	Top Down (Cut)	No
Non-Gravity	Cantilever	Sheet Pile, Soldier Pile, Tangent/Secant	Top Down (Cut) /Bottom Up (Fill)	No
	Anchored	Anchored Sheet Pile, Soldier Pile, Tangent/Secant	Top Down (Cut)	No

Table 14.2-1
Wall Classification

14.3 Wall Selection Criteria

14.3.1 General

The objective of selecting a wall system is to determine an appropriate wall system that is practical to construct, structurally sound, economic, aesthetically pleasing, environmentally consistent with the surroundings, and has minimal maintenance problems.

With the development of many new wall systems, designers have the choice of selecting many feasible wall systems that can be constructed on a given highway project. Designers are encouraged to evaluate several feasible wall systems for a particular project where wall systems can be economically constructed. After consideration of various wall types, a single type should be selected for final analyses and design. Wall designers must consider the general design concepts described in section 14.4 and specific wall design requirements described in 14.5 thru 14.11 of this chapter, and key wall selection factors discussed in this section.

In general, selection of a wall system should include, but not limited to the key factors described in this section for consideration when generating a list of acceptable retaining wall systems for a given site.

14.3.1.1 Project Category

The designer must determine if the wall system is permanent or temporary.

14.3.1.2 Cut vs. Fill Application

Due to construction techniques and base width requirements for stability, some wall types are better suited for cut sections where as others are suited for fill or fill/cut situations. The key considerations are the amount of excavation or shoring, overall wall height, proximity of wall to other structures, and right-of-way width available. The site geometry should be evaluated to define site constraints. These constraints will generally dictate if fill, fill/cut or cut walls are required.

Cut Walls

Cut walls are generally constructed from the top down and used for both temporary and permanent applications. Cantilever sheet pile walls are suitable for shallower cuts. If a deeper cut is required to be retained, a key question is to determine the availability of right-of-way (ROW). Subsurface conditions such as shallow bedrock also enter into considerations of cut walls. Anchored walls, soil nail walls, and anchored soldier pile walls may be suitable for deeper cuts although these walls require either a larger permanent easement or permanent ROW.

Fill walls

Walls constructed in fill locations are typically used for permanent construction and may require large ROW to meet the base width requirements. The necessary fill material may be required to be granular in nature. These walls use bottom up construction and have typical cost effective

ranges. Surface conditions must also be considered. For instance, if soft compressible soils are present, walls that can tolerate larger settlements and movements must be considered. MSE walls are generally more economical for fill locations than CIP cantilever walls.

Cut/fill Walls

CIP cantilever and prefabricated modular walls are most suitable in cut/fill situations as the walls are built from bottom up, have narrower base widths and these walls do not rely on soil reinforcement techniques to provide stability. These types of walls are suitable for both cut or fill situations.

14.3.1.3 Site Characteristics

Site characterization should be performed, as appropriate, to provide the necessary information for the design and construction of retaining wall systems. The objective of this characterization is to determine composition and subsurface soil/rock conditions, define engineering properties of foundation material and retained soils, establish groundwater conditions, determine the corrosion potential of the water, and identify any discontinuities or geotechnical issues such as poor bearing capacity, large settlement potential, and/or any other design and construction problems.

Site characterization mainly includes subsurface investigations and analyses. WisDOT's Geotechnical Engineering Unit generally completes the investigation and analyses for all in-house wall design work.

14.3.1.4 Miscellaneous Design Considerations

Other key factors that may influence wall selection include height limitations for specific systems, limit of wall radius on horizontal alignment, and whether the wall is a component of an abutment.

Foundation conditions that may govern the wall selection are bearing capacity, allowable lateral and vertical movements, tolerable settlement and differential movement of retaining wall systems being designed, susceptibility to scour or undermining due to seepage, and long-term maintenance.

14.3.1.5 Right of Way Considerations

Availability of ROW at a site may influence the selection of wall type. When a very narrow ROW is available, a sheet pile wall may be suitable to support an excavation. In other cases, when walls with tiebacks or soil reinforcement are considered, a relatively large ROW may be required to meet wall requirements. Availability of vertical operating space may influence wall selection where piling installation is required and there is not enough room to operate driving equipment.

Section 11-55-5 of the FDM describes the ROW requirement for retaining walls. It requires that all segments of a retaining wall should be under the control of WisDOT. No improvements or utility construction should be allowed in the ROW area of the retaining wall systems.

14.3.1.6 Utilities and Other Conflicts

Feasibility of some wall systems may be influenced by the presence of utilities and buried structures. MSE, soil nailing and anchored walls commonly have conflict with the presence of utilities or buried underground structures. MSE walls should not be used where utilities must stay in the reinforcement zone.

14.3.1.7 Aesthetics

In addition to being functional and economical, the walls should be aesthetically pleasing. Wall aesthetics may influence selection of a particular wall system. However, the aesthetic treatment should complement the retaining wall and not disrupt the functionality or selection of wall type. All permanent walls should be designed with due considerations to the wall aesthetics. Each wall site must be investigated individually for aesthetic needs. Temporary walls should generally be designed with little consideration to aesthetics. Chapter 4 - Aesthetics presents structures aesthetic requirements.

14.3.1.8 Constructability Considerations

Availability of construction materials, site accessibility, equipment availability, form work and temporary shoring, dewatering requirements, labor considerations, complicated alignment changes, scheduling consideration, speed of construction, construction staging/phasing and maintaining traffic during construction are some of the important key factors when evaluating the constructability of each wall system for a specific project site.

In addition, it should also be ensured that the temporary excavation slopes used for wall construction are stable as per site conditions and meet all safety requirements laid by Occupation and Safety Health Administration (OSHA).

14.3.1.9 Environmental Considerations

Selection of a retaining wall system is influenced by its potential environmental impact during and after construction. Some of the environmental concerns during construction may include excavation and disposal of contaminated material at the project site, large quantity of water, corrosive nature of soil/water, vibration impacts, noise abatement and pile driving constraints.

14.3.1.10 Cost

Cost of a retaining wall system is influenced by many factors that must be considered while estimating preliminary costs. The components that influence cost include excavation, structure, procurement of additional easement or ROW, drainage, disposal of unsuitable material, traffic maintenance etc. Maintenance cost also affects overall cost of a retaining wall system. The retaining walls that have least structural cost may not be the most economical walls. Wall selection should be based on overall cost. When feasible, MSE Walls and modular block gravity walls generally cost less than other wall types.

14.3.1.11 Mandates by Other Agencies

In certain project locations, other agency mandates may limit the types of wall systems considered.

14.3.1.12 Requests made by the Public

A Public Interest Finding could dictate the wall system to be used on a specific project.

14.3.1.13 Railing

For safety reasons most walls will require a protective railing. The railing will usually be located behind the wall. The roadway designer will generally determine whether a pedestrian or non-pedestrian railing is required and what aesthetic considerations are needed.

14.3.1.14 Traffic barrier

A traffic barrier should be installed if vehicles, bicycles, or pedestrians are likely to be present on top of the wall. The roadway designer generally determines the need for a traffic barrier.

14.3.2 Wall Selection Guide Charts

Table 14.3-1 and Table 14.3-2 summarize the characteristics for the various wall types that are normally considered during the wall selection process. The tables also present some of the advantages, disadvantages, cost effective height range and other key selection factors. A wall designer can use these tables and the general wall selection criteria discussed in 14.3.1 as a guide. Designers are encouraged to contact the Structures Design Section if they have any questions relating to wall selection for their project.

Wall Type	Temp.	Perm.	Cost Effective Height (ft)	Req'd. ROW	Advantages	Disadvantages
CIP Concrete Gravity		√	3 - 10	0.5H - 0.7H	• Durable • Meets aesthetic requirement • Requires small quantity of select backfill	• High cost • May need deep foundation • Longer const. time
CIP Concrete Cantilever		√	6 - 28	0.4H - 0.7H	• Durable meets aesthetic requirement • Requires small quantity of select backfill	• High cost • May need deep foundation • Longer const. time & deeper embedment
Reinforced CIP Counterfort		√	26 - 40	0.4H - 0.7H	• Durable • Meets aesthetic requirement • Requires small back fill quantity	• High cost • May need deep foundation • Longer const. time & deeper embedment
Modular Block Gravity		√	3 - 8	0.4H - 0.7H	• Does not require skilled labor or specialized equipment	• Height limitations
Metal Bin		√	6 - 20	0.4H - 0.7H	• Does not require skilled labor or special equipment	• Difficult to make height adjustment in the field
Concrete Crib		√	6 - 20	0.4H - 0.7H	• Does not require skilled labor or specialized equipment	• Difficult to make height adjustment in the field
Gabion		√	6 - 20	0.4H - 0.7H	• Does not require skilled labor or specialized equipment	• Need large stone quantities • Significant labor
MSE Wall (precast concrete panel with steel reinforcement)		√	10 – 30*	0.7H - 1.0H	• Does not require skilled labor or specialized equipment	• Requires use of select backfill
MSE Wall (modular block and geo-synthetic reinforcement)		√	6 – 22*	0.7H - 1.0H	• Does not require skilled labor or specialized equipment	• Requires use of select backfill
MSE Wall (geotextile/geogrid/ welded wire facing)	√	√	6 – 35*	0.7H - 1.0H	• Does not require skilled labor or specialized equipment	• Requires use of select backfill

*WisDOT maximum wall height

Table 14.3-1
Wall Selection Chart for Gravity Walls

Wall Type	Temp.	Perm.	Cost Effective Height (ft)	Req'd. ROW	Water Tightness	Advantages	Disadvantages
Sheet Pile	√	√	6 - 15	Minimal	Fair	• Rapid construction • Readily available	• Deep foundation may be needed • Longer construction time
Soldier Pile	√	√	6 - 28	0.2H - 0.5H	Poor	• Easy construction • Readily available	• High cost • Deep foundation may be needed • Longer construction time
Tangent Pile		√	20 - 60	0.4H - 0.7H	Fair/Poor	• Adaptable to irregular layout • Can control wall stiffness	• High cost • Deep foundation may be needed • Longer construction
Secant Pile		√	14 - 60	0.4H - 0.7H	Fair	• Adaptable to irregular layout • Can control wall stiffness	• Difficult to make height adjustment in the field • High cost
Anchored	√	√	15 - 35	0.4H - 0.7H	Fair/Poor	• Rapid construction	• Difficult to make height adjustment in the field
Soil Nail	√	√	6 - 20	0.4H - 0.7H	Fair	• Option for top-down	• Cannot be used in all soil types • Cannot be used below water table • Significant labor

Table 14.3-2
Wall Selection Chart for Non-Gravity Walls

14.4 General Design Concepts

This section covers the general design standards and criteria to be used for the design of temporary and permanent gravity and non-gravity walls including proprietary and non-proprietary wall systems.

The design criteria for tiered walls that retain other walls or hybrid walls systems requiring special design are not covered specifically in this section.

14.4.1 General Design Steps

The design of wall systems should follow a systematic process applicable for all wall systems and summarized below:

1. Basic Project Requirement: This includes determination of wall alignment, wall geometry, wall function, aesthetic, and project constraints (e.g. right of way, easement during construction, environment, utilities, etc.) as part of the wall development process described in 14.1.

2. Wall Selection: Select wall type based on step 1 and the wall section criteria discussed in 14.3.

3. Geotechnical Investigation: Subsurface investigation and analyses should be performed in accordance with 14.4.4 and Chapter 10 - Geotechnical Investigation to develop foundation and fill material design strength parameters and foundation bearing capacity. Note: this work generally requires preliminary checks performed in step 7, based on steps 4 thru 6.

4. Wall Loading: Determine all applicable loads likely to act on the wall as discussed in 14.4.5.3.

5. Initial Wall Sizing: This step requires initial sizing of various wall components and establishing wall batter which is wall specific and described under each specific wall designs discussed in 14.5 thru 14.13.

6. Wall Design Requirements: Design wall systems using design standards and service life criteria and the *AASHTO Load and Resistance Factor Design* (*AASHTO LRFD*) requirements discussed in 14.4.1 and 14.4.2.

7. Perform external stability, overall stability, and wall movement checks discussed in 14.4.7. These checks will be wall specific and generally performed by the Geotechnical Engineer of record. The stability checks should be performed using the performance limits, load combinations, and the load/resistance factors per *AASHTO LRFD* requirements described in 14.4.5.5 and 14.4.5.6 respectively.

8. Perform internal stability and structural design of the individual wall components and miscellaneous components. These computations are performed by the Designer for non-proprietary walls. For proprietary walls, internal stability is the responsibility of the contractor/supplier after letting.

9. Repeat design steps 4 thru 8 if the required checks are not met.

14.4.2 Design Standards

Retaining wall systems shall be designed in conformance with the current *AASHTO Load and Resistance Factor Design Specifications* (AASHTO LRFD) and in accordance with the WisDOT Bridge Manual. Walls shall be designed to address all limit states.

Wall systems including rock walls and soil nail systems which are not specifically covered by the *AASHTO LRFD* specifications shall be designed using the hierarchy of guidelines presented in this chapter, Allowable Stress Design (ASD) or *AASHTO Load Factor Design* (LFD) methods or the design procedures developed based on standard engineering and/or industry practices. The guidelines presented in this chapter will prevail where interpretation differs. WisDOT's decision shall be final in those cases. The new specifications for the wall designs were implemented October 1st, 2010.

14.4.3 Design Life

All permanent retaining walls and components shall be designed for a minimum service life of 75 years. All temporary walls shall be designed for a period of 36 months or for the project specific duration, whichever is greater. The design of temporary wall systems is the responsibility of the contractor. The temporary walls shall meet all the safety requirements as that of a permanent wall except for corrosion and aesthetics.

14.4.4 Subsurface Exploration

Geotechnical exploration may be needed to explore the soil/rock properties for foundation, retained fill, and backfill soils for all retaining walls regardless of wall height. It is the designer's responsibility to ensure that pertinent soils information, loading conditions, foundation considerations, consolidation potential, settlement and external stability is provided for the wall design.

Before planning a subsurface investigation, it is recommended that any other available subsurface information such as geological or other maps or data available from previous subsurface investigations be studied. Subsurface investigation and analyses should be performed where necessary, in accordance with Chapter 10 - Geotechnical Investigation.

The investigations and analyses may be required to determine or establish the following:

- Nominal bearing pressure, consolidation properties, unit weight and shear strength (drained or undrained strength for fine grained soils) for foundation soils/rocks.
- Shear strength, and unit weight of selected backfill.
- Shear strength and unit weight of random fill or in-situ soil behind selected backfill or wall
- Location of water table

14.4.5 Load and Resistance Factor Design Requirements

14.4.5.1 General

In the LRFD process, wall stability is checked as part of the design process for anticipated failure modes for various types of walls at specified limit states, and the wall components are sized accordingly.

To evaluate the limit states, all applicable design loads are computed as nominal or un-factored loads, than factored using a load factor and grouped to consider the force effect of all loads and load combinations in accordance with **LRFD [3.4.1]**. The factored loads are compared with the factored resistance as part of the stability check in accordance with **LRFD [11.5]** such that the factored resistance is not less than factored loads as presented in **LRFD [1.3.2.1]**

$$Q = \sum \eta_i \gamma_I Q_i \leq \phi R_n = R_r \qquad \textbf{LRFD [1.3.2.1-1]}$$

Where:

η_I	=	Load modifier (a function of η_D, η_R, assumed 1.0 for retaining walls)
γ_I	=	Load factor
Q_i	=	Force effect
Q	=	Total factored force effect
ϕ	=	Resistance factor
R_n	=	Nominal resistance
R_r	=	Factored resistance = ϕR_n

14.4.5.2 Limit States

The limit states (as defined in **LRFD [3.4.1]**) that must be evaluated as part of the wall design requirements mainly include (1) Strength limit states; (2) Service limit states; and (3) Extreme Event limit states. The fatigue limit state is not used for retaining walls.

Strength limit state is applied to ensure that walls have adequate strength to resist external stability failure due to sliding, bearing resistance failure, etc. and internal stability failure such as pullout of reinforcement, etc. Evaluation of Strength limit states is accomplished by grouping factored loads and comparing to the reduced or factored soil strengths using resistance factors discussed in 14.4.5.6.

Service limit state is evaluated for overall stability and total or differential settlement checks. Evaluation of the Service limit states is usually performed by using expected service loads

assuming a factor of 1.0 for nominal loads, a resistance factor of 1.0 for nominal strengths and elastic analyses.

Extreme Event II limit state is evaluated to design walls for vehicular collision forces. In particular, MSE walls having a traffic barrier at the top are vulnerable to damage due to vehicle collision forces and this case for MSE Walls is discussed further in 14.6.3.10.

14.4.5.3 Design Loads

Retaining walls shall be designed to withstand all applicable loads generally categorized as permanent and transient loads.

Permanent loads include dead load DC due to weight of the structural components and non structural components of the wall, dead load DW loads due to wearing surfaces and utilities, vertical earth pressure EV due to dead load of earth, horizontal earth pressure EH and earth surcharge loads ES. Applied earth pressure and earth pressure surcharge loads are further discussed in 14.4.5.4.

The transient loads include, but are not limited to, water pressure WA, live load surcharge LS, and forces caused by the deformations due to shrinkage SH, creep CR and settlement caused by the foundation SE.

These loads should be computed in accordance with **LRFD [3.4]** and **LRFD [11.0].** Only loads applicable for each specific wall type should be considered in the engineering analyses.

14.4.5.4 Earth Pressure

Determination of earth pressure will depend upon types of wall structure (gravity, semi gravity, reinforced earth wall, cantilever or anchored walls, etc.), wall movement, wall geometry, wall friction, configuration, retained soil type, ground water conditions, earth surcharge, and traffic and construction related live load surcharge. In general, earth pressure on retaining walls shall be calculated in accordance with **LRFD [3.11.5]**. Earth pressure that will develop on walls includes active, passive or at-rest earth pressure.

<u>Active Earth Pressure</u>

The active earth pressure condition exists when a retaining wall is free to rotate away from the retained backfill. There are two earth pressure theories available for determining the active earth pressure coefficient (K_a); Rankine and Coulomb earth pressure theories. A detailed discussion of Rankine and Coulomb theories can be found in *Foundation Design- Principles and Practices*; by Donald P. Cudoto or *Foundation Analysis and Design*, 5th Edition by Joseph E. Bowles as well as other standard text books on this subject.

Rankine earth pressure makes assumptions that the retained soil has a horizontal surface, the failure surface is a plane and that the wall is smooth (i.e. no friction). Rankine earth pressure theory is the preferred method for developing the active earth pressure coefficient; however, where wall friction is an important consideration or where sloping surcharge loads are considered, Coulomb earth pressure theory may be used. The use of Rankine theory will cause

a slight over estimation of K_a, therefore, increasing the pressure on the wall resulting in a more conservative design.

Walls that are cast-in-place (CIP) semi gravity concrete cantilever referred, hereafter, as CIP cantilever, Mechanically Stabilized Earth (MSE), modular block gravity, soil nailing, soldier-pile and sheet-pile walls are typically considered flexible enough to justify using an active earth pressure coefficient.

At-Rest Earth Pressure

In the at-rest earth pressure (K_o) condition, the top of the wall is not allowed to deflect or rotate; therefore, requiring the wall to support the full pressure of the soil behind the wall.

The at-rest earth pressure coefficient shall be used to calculate the lateral earth pressure for non-yielding retaining walls restrained from rotation and/or lateral translation in accordance with **LRFD [3.11.5.2]**. Non-yielding walls include integral abutment walls, or retaining walls resting on bedrock or pile foundation.

Passive Earth Pressure

The development of passive earth pressure (K_p) requires a retaining wall to move into or toward the soil. As with the active earth pressure, Rankine earth pressure is the preferred method to be used to develop passive earth pressure coefficient. The use of Rankine theory will cause an under estimation of K_p, therefore resulting in a more conservative design. Coulomb earth pressure theory may be used if the appropriate conditions exist at a site; however, the designer is required to understand the limitations on the use of Coulomb earth pressure theory as applied to passive earth pressures.

Neglect any contribution from passive earth pressure in stability calculations unless the base of the wall extends below the depth to which foundation soil or rock could be weakened or removed by freeze-thaw, shrink-swell, scour, erosion, construction excavation, or any other means. In wall stability calculations, only the embedment below this depth, known as the effective embedment depth, shall be considered when calculating the passive earth pressure resistance. This is in accordance with **LRFD [11.6.3.5].**

14.4.5.4.1 Earth Load Surcharge

The effect of earth load surcharge including uniform, strip, and point loads shall be computed in accordance with **LRFD [3.11.6.1]** and **LRFD [3.11.6.2].**

14.4.5.4.2 Live Load Surcharge

Increased earth pressure on a wall occurs due to vehicular loading on top of the retained earth including operation of large or heavily-loaded cranes, staged equipment, soil stockpile or material storage, or any surcharge loads behind the walls. Earth pressure from live load surcharge shall be applied when a vehicular load is within one half of the wall height behind the back face of the wall or reinforced soil mass for MSE walls, in accordance with **LRFD [3.11.6.4].** In most cases, surcharge load can be modeled by assuming 2 ft of fill.

WisDOT policy item:

The equivalent height of soils for vehicular loading on retaining walls parallel to the traffic shall be 2.0 feet, regardless of the wall height. For standard unit weight of soil equal to 120 pcf, the resulting live load surcharge is 240 psf. Walls without traffic shall be designed for a live load surcharge of 100 psf to account for construction live loads.

14.4.5.4.3 Compaction Loads

Pressure induced by the compaction load can extend to variable depths due to the total static and dynamic forces exerted by compaction equipment. The effect of increased lateral earth pressure due to compaction loads during construction should be considered when compaction equipment is operated behind the wall. The compaction load surcharge effect is minimized by WISDOT standard specifications that require small walk behind compactors within 3 ft of the wall.

14.4.5.4.4 Wall Slopes

The slopes above and below the wall can significantly affect the earth pressures and wall stability. Slopes above the wall will influence the active earth pressure; slopes at the toe of the wall influences the passive earth pressures. In general, the back slope behind the wall should be no steeper than 2:1 (H:V). Where possible, a 4.0 ft wide horizontal bench should be provided at the front face of the wall.

14.4.5.4.5 Loading and Earth Pressure Diagrams

Loading and earth pressure diagrams are developed to compute nominal (unfactored) loads and moments. All applicable loads described in 14.4.5.3 and 14.4.5 shall be considered for computing nominal loads. For a typical wall, the force diagram for the earth pressure should be developed using a triangular distribution plus additional pressures resulting from earth or live load surcharge, water pressure, compaction etc. as discussed in 14.4.5.4.

The engineering properties for selected fill, concrete and steel are given in 14.4.6. The foundation and retained earth properties are selected as per discussions in 14.4.4 . One of the three cases is generally applicable for the development of loading diagrams and earth pressures:

1. Horizontal backslope with traffic surcharge
2. Sloping backslope
3. Broken backslope

Loading diagrams for CIP cantilever, MSE, modular block gravity, and prefabricated modular walls are shown for illustration. The designer shall develop loading diagrams as applicable.

CIP cantilever wall with sloping surcharge

For CIP cantilever walls, lateral active earth pressure shall be computed using Coulomb's theory for short heels or using Rankine theory for very long heels in accordance with the criteria presented in **LRFD [3.11.5.3]** and **LRFD [C3.11.5.3]**.

Walls resting on rock or batter piles can be designed for active earth pressure, based on WisDOT policy and in accordance with **LRFD [3.11.5.2].** Effect of the passive earth pressure on the front face of the wall shall be neglected in stability computation, unless the base of the wall extends below depth of maximum scour, freeze thaw or other disturbances in accordance with **LRFD [11.6.3.5]**.

Effect of surcharge loads ES present at the surface of the backfill of the wall shall be included in the analysis in accordance with 14.4.5.4.1. Walls with horizontal backfill shall be designed for live load surcharge in accordance with 14.4.5.4.2.

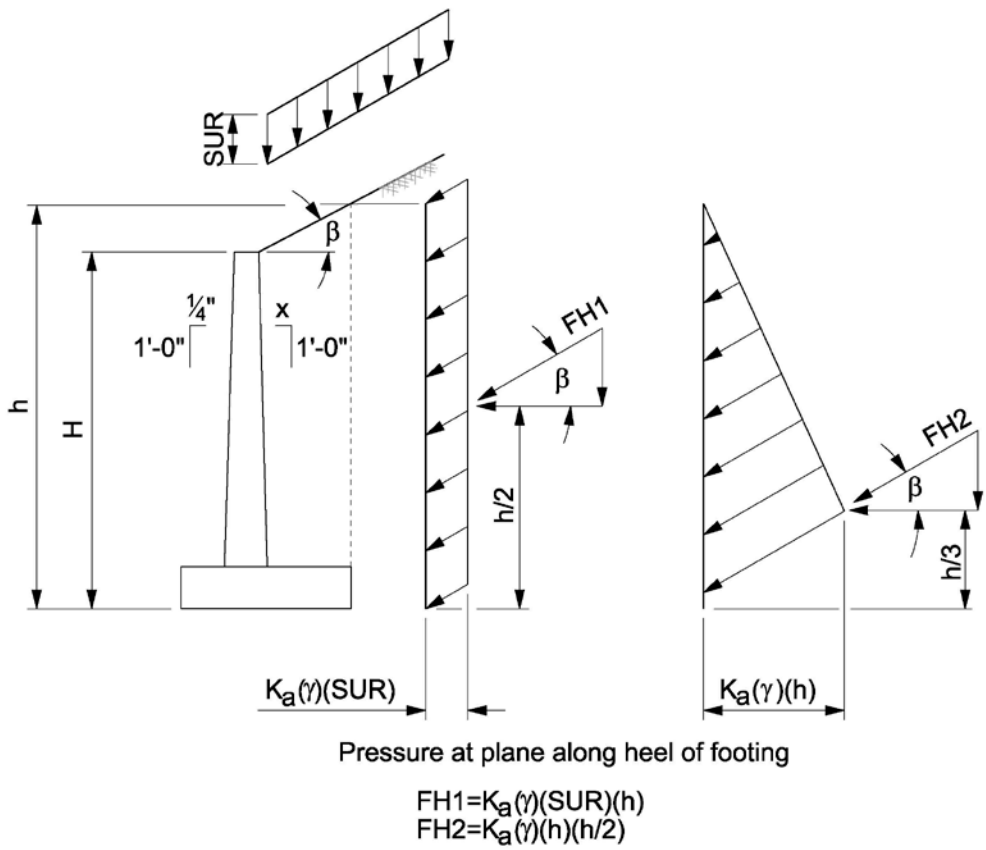

Figure14.4-1
Loading Diagram for a Cantilever Retaining Wall with Surcharge Loading

MSE Walls

The loading and earth pressure diagram for an MSE wall shall be developed in accordance with **LRFD [11.11.2]** and described below for the three conditions defined earlier in this section.

MSE Wall with Horizontal Backslope and Traffic Surcharge

Figure 14.4-2 shows a procedure to estimate the earth pressure. The active earth pressure for horizontal backslope is computed using a simplified version of Coulomb theory

$$K_a = \tan^2(45 - \phi_f / 2)$$

Where:

K_a = Coefficient of active earth pressure

φ_f = Angle of internal friction of retained earth

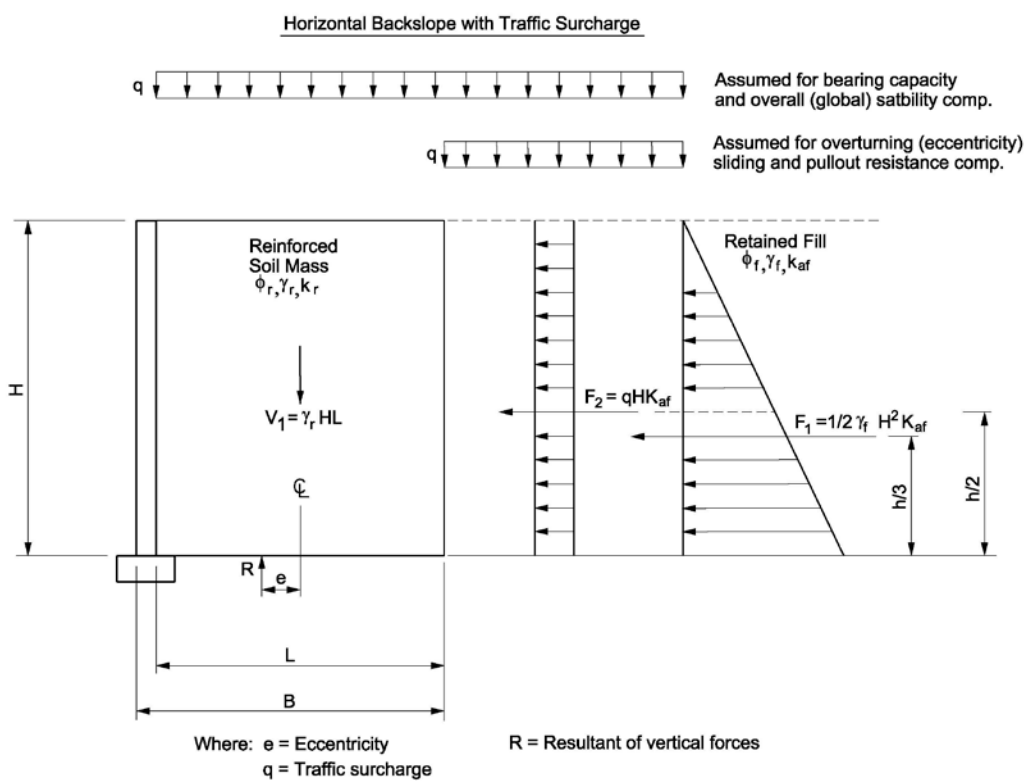

Figure 14.4-2
MSE Walls Earth Pressure for Horizontal Backslope with Traffic Surcharge
(Source *AASHTO LRFD*)

MSE Wall with Sloping Surcharge

The active earth pressure coefficient K_a is computed using Coulomb's equation. The force on the rear of the reinforced soil mass (F_t) and the resulting horizontal (F_h) and vertical (F_v) forces are determined from the following equations:

$$F_T = 1/2\ \gamma_f h^2 K_{af}$$

$$F_h = F_t \cos \beta$$

$$F_v = F_t \sin \beta$$

Where:

γ_f	=	Unit weight of retained fill material
β	=	Slope angle of backfill behind wall
δ	=	Angle of friction between retained backfill and reinforced backfill
h	=	See Figure 14.4-3
K_{af}	=	Use Coulomb's equation

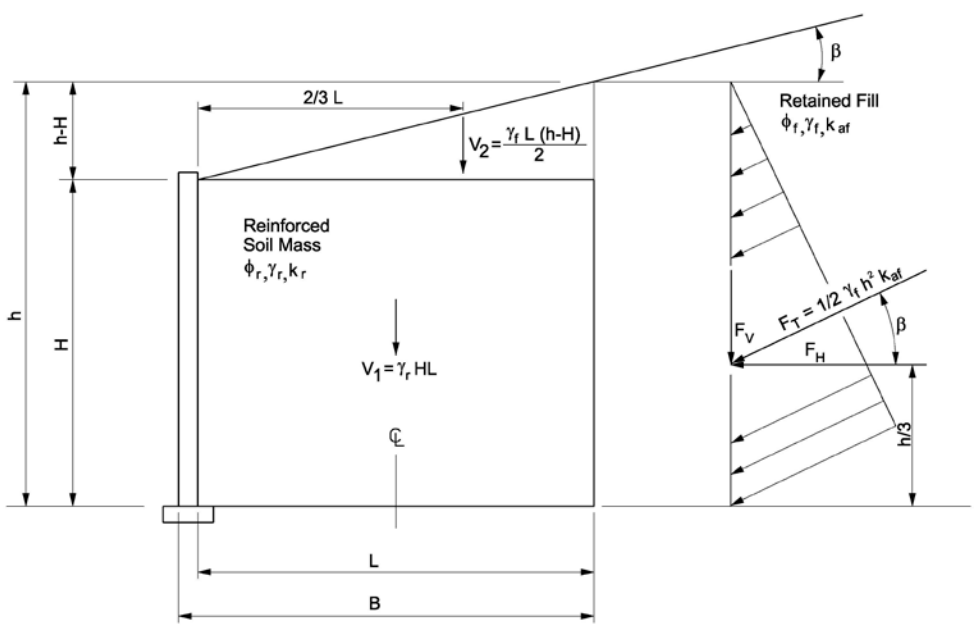

Figure 14.4-3
MSE Walls Earth Pressure for Sloping Backfill
(Source *AASHTO LRFD*)

MSE Wall with Broken Backslope

For broken backslopes, the active earth pressure coefficient is determined using Coulomb's equation except that surcharge angle β and interface angle δ is substituted with infinite slope angle I. Force, F_t, is determined using:

$$F_t = 1/2\ \gamma_f h^2 K_{af}$$

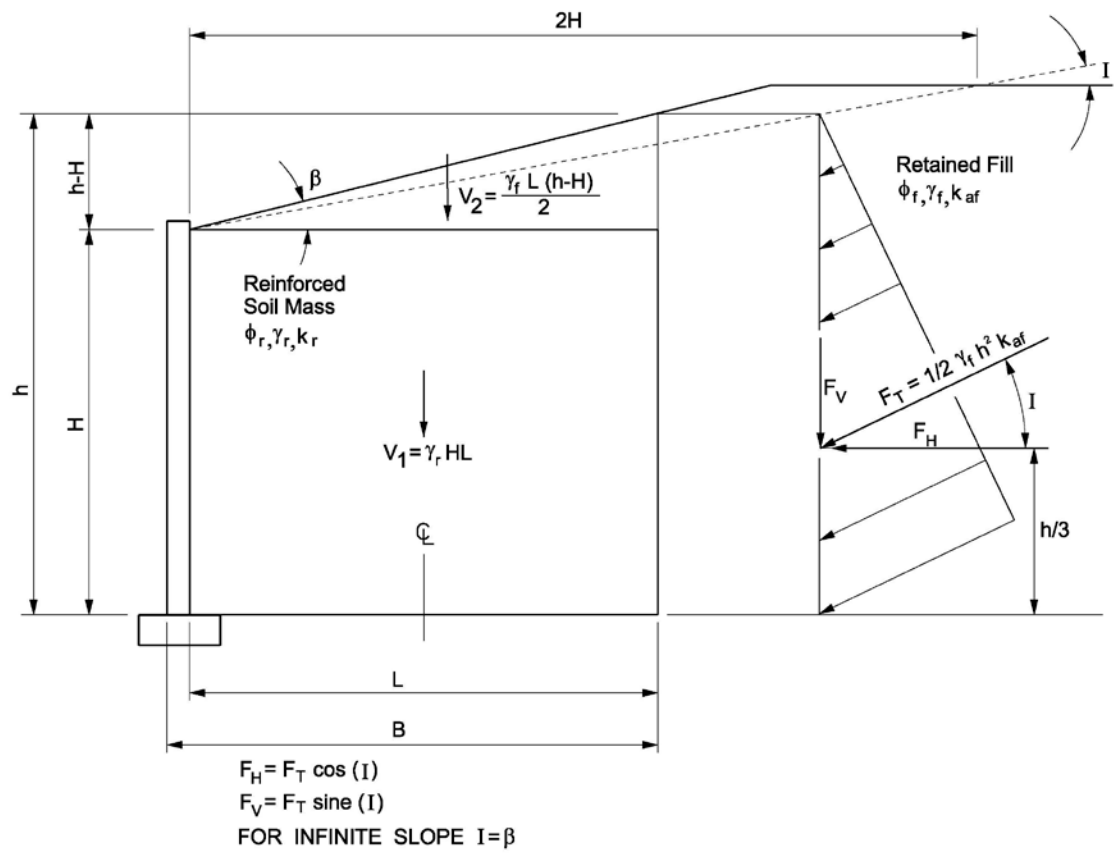

Figure 14.4-4
MSE Walls Earth Pressure for Broken Backfill
(Source *AASHTO LRFD*)

Modular Block Gravity Wall with Sloping Surcharge

When designing a "Modular Block Gravity Wall" without setback and with level backfill, the active earth pressure coefficient may be determined using Rankine theory from the following formula.

$$K_a = \tan^2(45 - \phi_f / 2)$$

When designing a "Modular Block Gravity Wall" with setback, the active earth pressure coefficient K_a shall be determined from the following Coulomb formula. The interface friction angle between the blocks and soil behind the blocks is assumed to be zero.

$$K_a = \frac{\cos^2(\phi_f + A)}{\cos^2 A \cos A (1 + (Z/Y)^{1/2})^2}$$

Where:

Z = $\sin \phi_f \sin(\phi_r - \beta)$

Y = $\cos A \cos(A + \beta)$

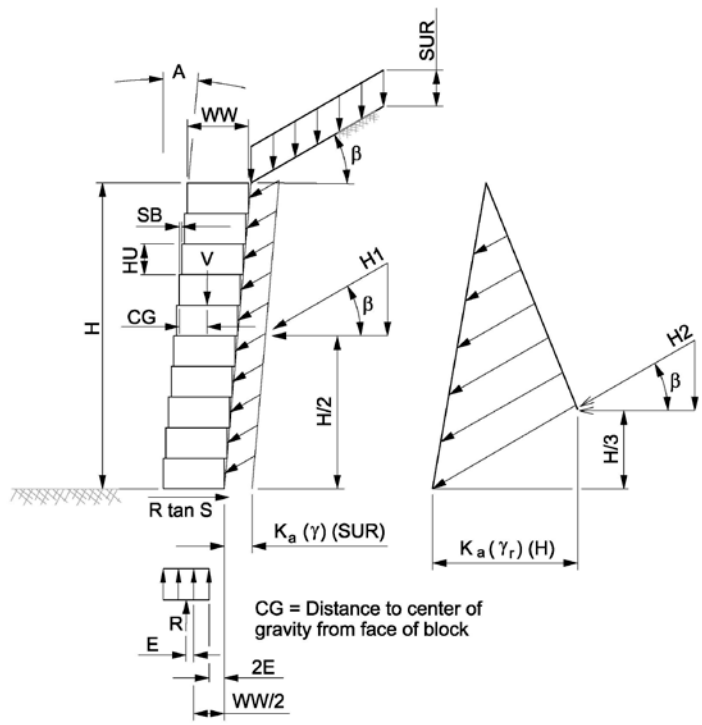

Figure 14.4-5
Modular Block Gravity Wall Analysis

No live load traffic and live load surcharge shall be allowed on modular block gravity walls although they are designed for a minimum live load of 100psf. The density of the blocks is assumed to be 135 pcf and the drainage aggregate inside or between the blocks 120 pcf. The forces acting on a modular block gravity wall are shown in Figure 14.4-5.

Prefabricated Modular Walls

Active earth pressure shall be determined by multiplying vertical loads by the coefficient of active earth pressure (K_a) and using Coulomb earth pressure theory in accordance with **LRFD [3.11.5.3] and LRFD [3.11.5.9]**. See Figure 14.4-6 for earth pressure diagram.

When the rear of the modules form an irregular surface (stepped surface), pressures shall be computed on an average plane surface drawn from the lower back heel of the lowest module as shown in Figure 14.4-7

Effect of the backslope soil surcharge and any other surcharge load imposed by existing structure should be accounted as discussed in 14.4.5.4. Trial wedge or Culmann method may also be used to compute the lateral earth pressure as presented in the *Foundation Analysis and Design*, 5th Edition (J. Bowles, 1996).

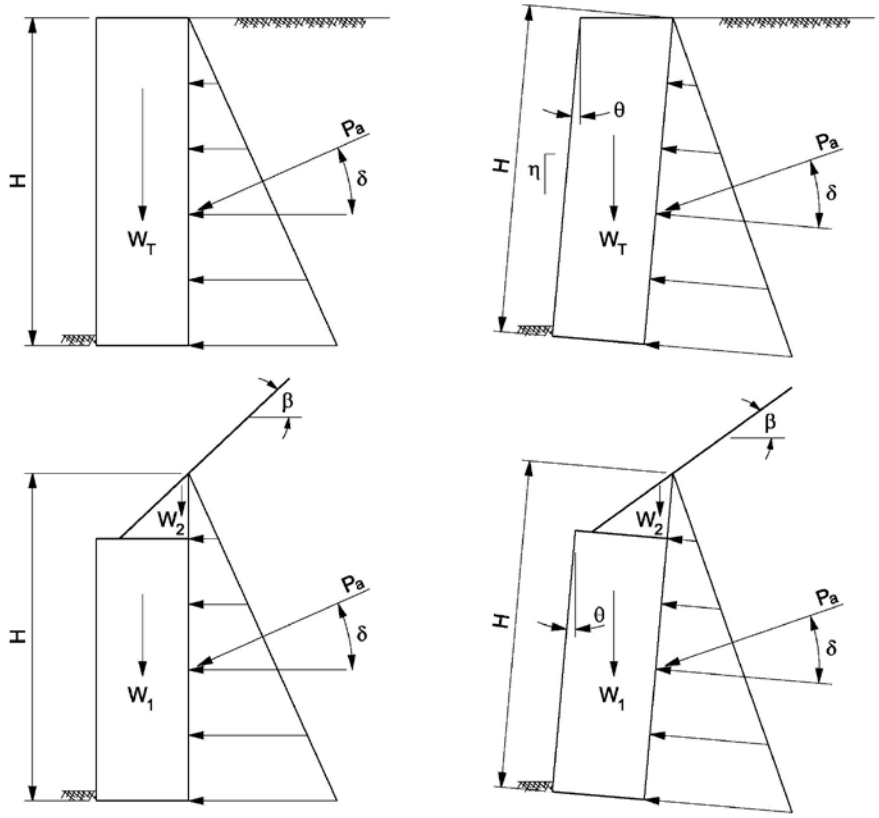

P_a @ H/3

$P_a = ½ \gamma H^2 K_a$

$$K_a = \frac{\cos^2(\phi+\theta)}{\cos^2\theta \cos(\theta-\delta)\left[1+\sqrt{\frac{\sin(\phi+\delta)\sin(\phi-\beta)}{\cos(\theta-\delta)\cos(\theta+\beta)}}\right]^2}$$

Figure 14.4-6

Lateral Earth Pressure on Concrete Modular Systems of Constant Width
(Source *AASHTO LRFD*)

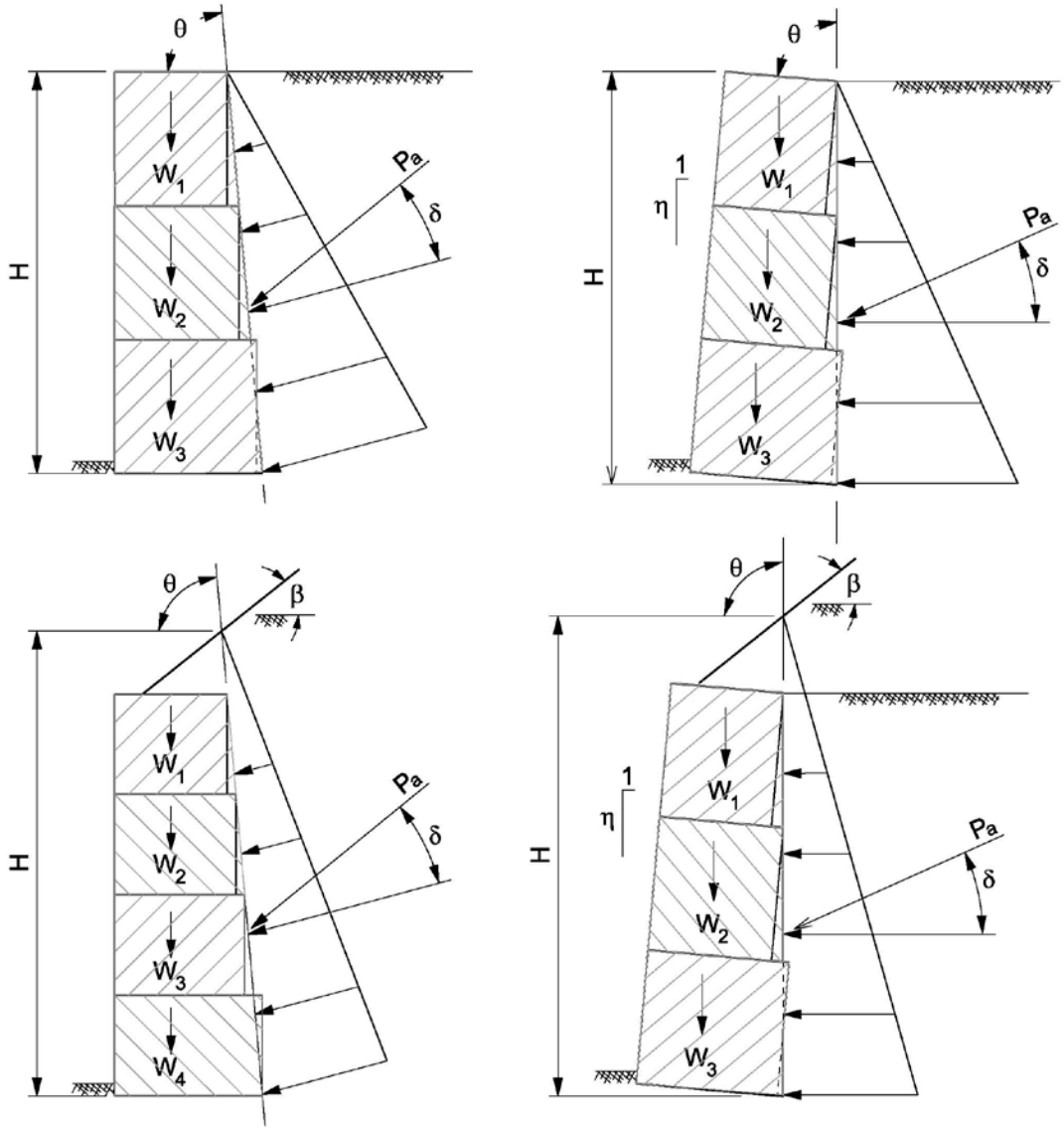

$$K_a = \frac{\sin^2(\theta+\phi)}{\sin^2\theta\sin(\theta-\delta)\left[1+\sqrt{\frac{\sin(\phi+\delta)\sin(\phi-\beta)}{\sin(\theta-\delta)\sin(\theta+\beta)}}\right]^2}$$

Figure 14.4-7
Lateral Earth Pressure on Concrete Modular Systems of Variable Width
(Source *AASHTO LRFD*)

14.4.5.5 Load factors and Load Combinations

The nominal loads and moments as described in 14.4.5.4.5 are factored using load factors found in **LRFD [Tables 3.4.1-1 and 3.4.1-2]**. The load factors applicable for most wall types considered in this chapter are given in Table 14.4-1. Load factors are selected to produce a total extreme factored force effect, and for each loading combination, both maximum and minimum extremes are investigated as part of the stability check, depending upon the expected wall failure mechanism.

Direction of Load	Load Type	Load Factor, γ_i		
		Strength I Limit		Service I Limit
		Maximum	Minimum	
Load Factors for Vertical Loads	Dead Load of Structural Components and Non-structural attachments DC	1.25	0.90	1.00
	Earth Surcharge Load ES	1.50	0.75	1.00
	Vertical Earth Load EV	1.35	1.00	1.00
	Water Load WA	1.00	1.00	1.00
	Live Load Surcharge LS	1.75	0.0	1.00
	Dead Load of Wearing Surfaces and Utilities DW	1.50	0.65	1.00
Load Factors for Horizontal Loads	Horizontal Earth Pressure EH			
	Active	1.50	0.90	1.00
	At-Rest	1.35	0.90	1.00
	Passive	1.35	NA	1.00
	Earth Surcharge ES	1.50	0.75	1.00
	Live Load Surcharge LS	1.75	1.75	1.00

Table 14.4-1
Load Factors

The factored loads are grouped to consider the force effect of all loads and load combinations for the specified load limit state in accordance with **LRFD [3.4.1].** Figure 14.4-8 illustrates the load factors and load combinations applicable for checking sliding stability and eccentricity for a cantilever wall at the Strength I limit state. This figure shows that structure weight DC is factored by using a load factor of 0.9 and the vertical earth load EV is factored by using a factor of 1.0. This causes contributing stabilizing forces against sliding to have a minimum force effect. At the same time, the horizontal earth load is factored by 1.5 resulting in maximum force effect for computing sliding at the base.

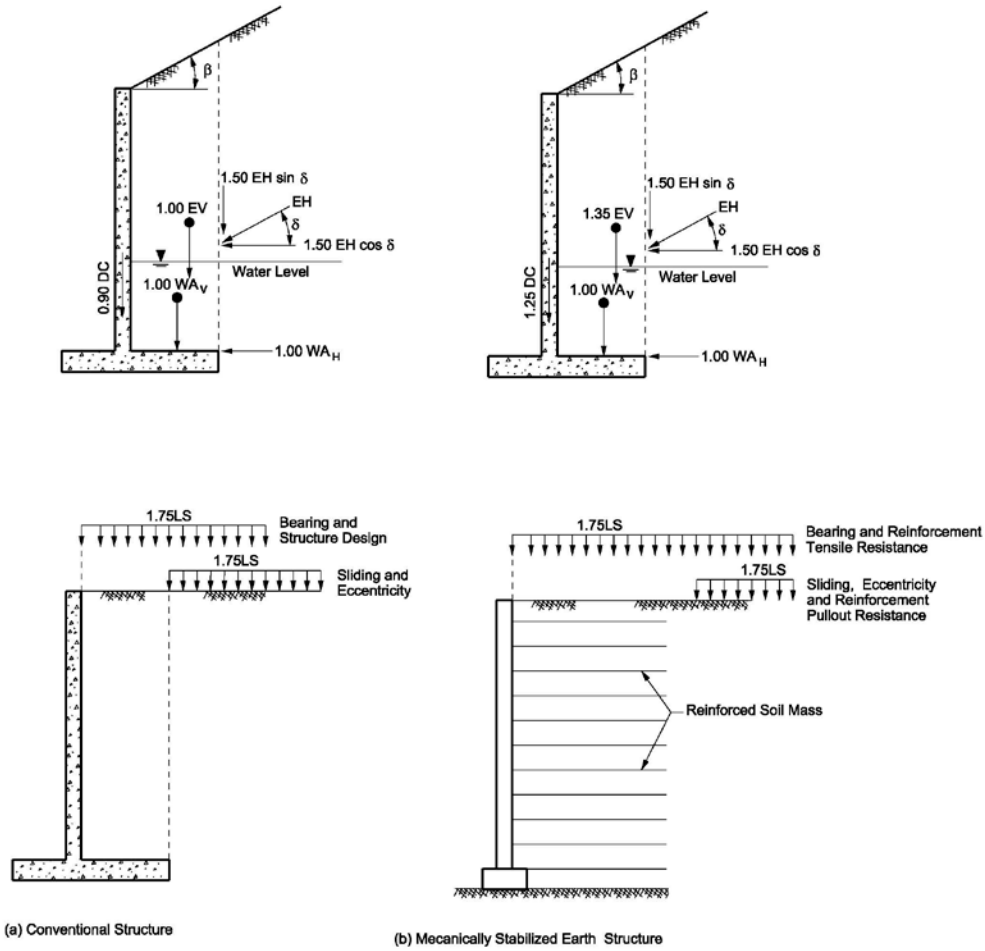

Figure 14.4-8
Application of Load Factors
(Source *AASHTO LRFD*)

14.4.5.6 Resistance Requirements and Resistance Factors

The wall components shall be proportioned by the appropriate methods so that the factored resistance as shown in **LRFD [1.3.2.1-1]** is no less than the factored loads, and satisfy criteria in accordance with **LRFD [11.5.4]** and **LRFD [11.6] thru [11.11]**. The factored resistance R_r is computed as follows: $R_r = \phi R_n$

Where

R_r	=	Factored resistance
R_n	=	Nominal resistance recommended in the Geotechnical Report
ϕ	=	Resistance factor

The resistance factors shall be selected in accordance with **LRFD [Tables 10.5.5.2.2-1, 10.5.5.2.3-1, 10.5.5.2.4-1, 11.5.6.1]**. Commonly used resistance factors for retaining walls are presented in Table 14.4-2.

14.4.6 Material Properties

The unit weight and strength properties of retained earth and foundation soil/rock (γ_f) are supplied in the geotechnical report and should be used for design purposes. Unless otherwise noted or recommended by the Designer or Geotechnical Engineer of record, the following material properties shall be assumed for the design and analysis if the selected backfill, concrete, and steel conforms to the WisDOT's *Standard Construction Specifications*:

<u>Granular Backfill Soil Properties</u>:

Internal Friction angle of backfill ϕ_f = 30 degrees

Backfill cohesion c = 0 psf

Unit Weight γ_f = 120 pcf

<u>Concrete</u>:

Compressive strength, f'_c at 28 days = 3500 psi

Unit Weight = 150 pcf

<u>Steel reinforcement</u>:

Yield strength f_y = 60,000 psi

Modulus of elasticity E_s = 29,000 ksi

Wall-Type and Condition		Resistance Factors
Mechanically Stabilized Earth Walls, Gravity Walls, and Semi-Gravity		
Bearing resistance	• Gravity & Semi-gravity • MSE	0.55 0.65
Sliding		1.00
Tensile resistance of metallic reinforcement and connectors	Strip reinforcement • Static loading Grid reinforcement • Static loading	0.75 0.65
Tensile resistance of geo-synthetic reinforcements and connectors	• Static loading	0.90
Pullout resistance of tensile reinforcement	• Static loading	0.90
Prefabricated Modular Walls		
Bearing		**LRFD [10.5]**
Sliding		**LRFD [10.5]**
Passive resistance		**LRFD [10.5]**
Non-Gravity Cantilevered and Anchored Walls		
Axial compressive resistance of vertical elements		**LRFD [10.5]**
Passive resistance of vertical elements		0.75
Pullout resistance of anchors	• Cohesionless soils • Cohesive soils • Rock	0.65 0.70 0.50
Pullout resistance of anchors	• Where proof tests are conducted	1.00
Tensile resistance of anchor tendons	• Mild steel • High strength steel	0.90 0.80
Flexural capacity of vertical elements		0.90

Table 14.4-2
Resistance Factors
Source **LRFD [Table 11.5.7-1]**

14.4.7 Wall Stability Checks

During the design process, walls shall be checked for anticipated failure mechanisms relating to external stability, internal stability (where applicable), movement and overall stability. In general, external and internal stability of the walls should be investigated at Strength limit states, in accordance with **LRFD [11.5.1]**. In addition, investigate the wall stability for excessive vertical and lateral displacement and overall stability at the Service limit states in accordance with **LRFD [11.5.2]**. Figure 14.4-2 thru Figure 14.4-14 show anticipated failure mechanisms for various types of walls.

14.4.7.1 External Stability

The external stability should be satisfied (generally performed by the Geotechnical Engineer) for all walls. The external stability check should include failure against lateral sliding, overturning (eccentricity), and bearing pressure failure as applicable for gravity or non-gravity wall systems in accordance with **LRFD [11.5.3]**. External stability checks should be performed at the Strength I limit state.

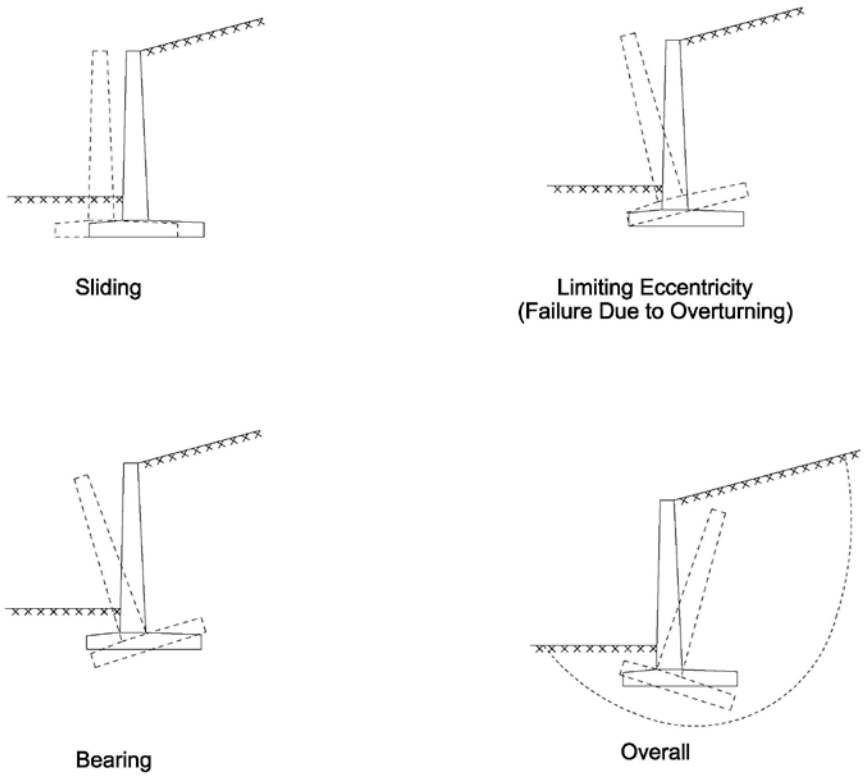

Figure14.4-9
External Stability Failure of CIP Semi-Gravity Walls

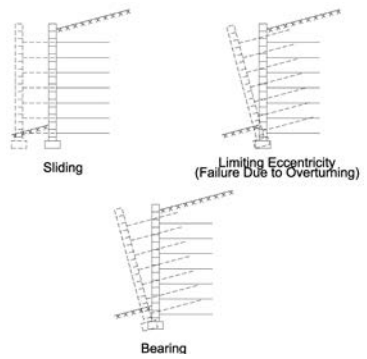

Figure 14.4-10
External Stability Failure of MSE Walls

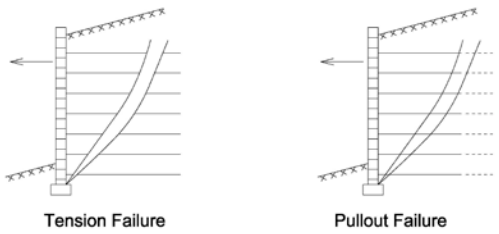

Figure 14.4-11
Internal Stability Failure of MSE Walls

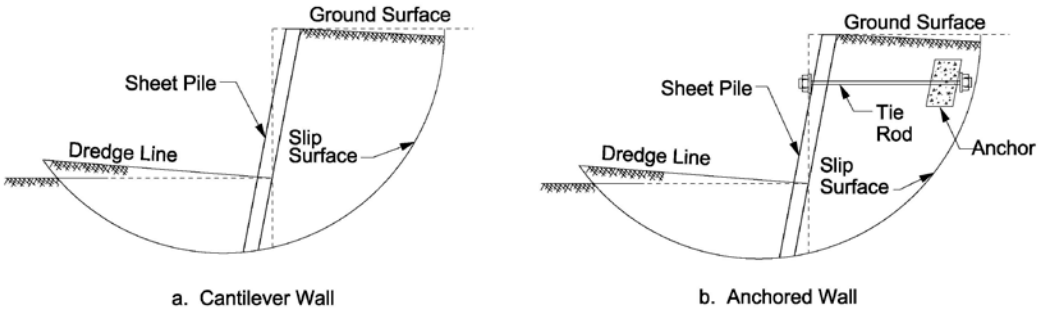

Figure 14.4-12
Deep Seated Failure of Non-Gravity Walls

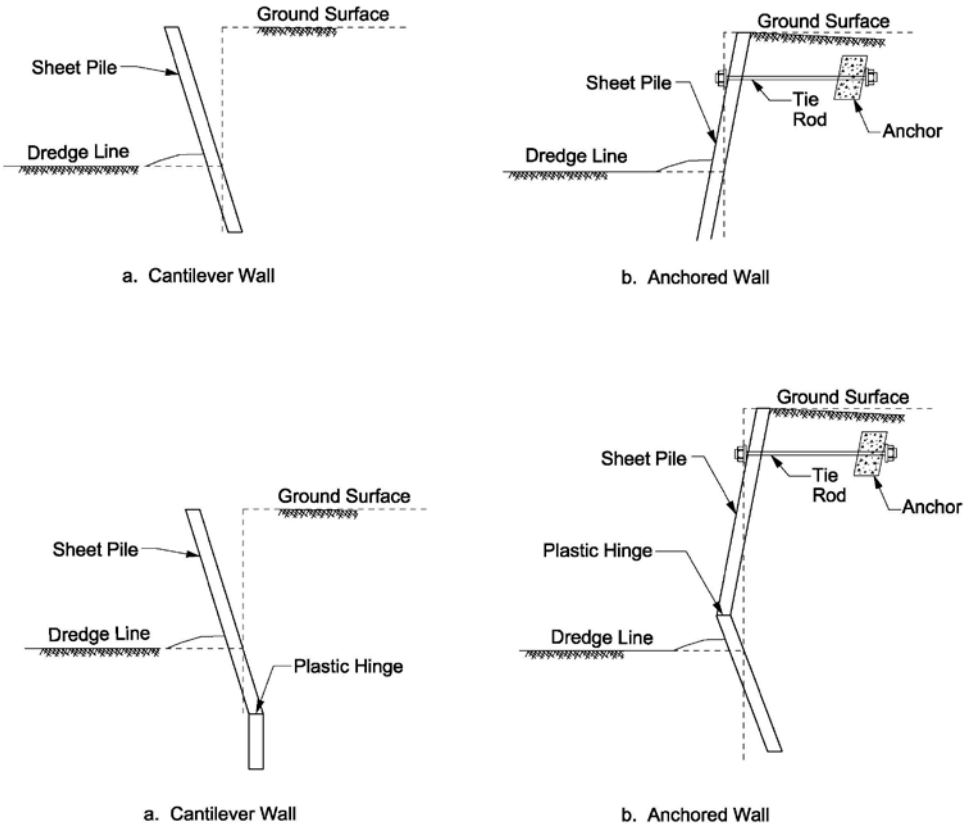

Figure 14.4-13
Flexural Failure of Non-Gravity Walls

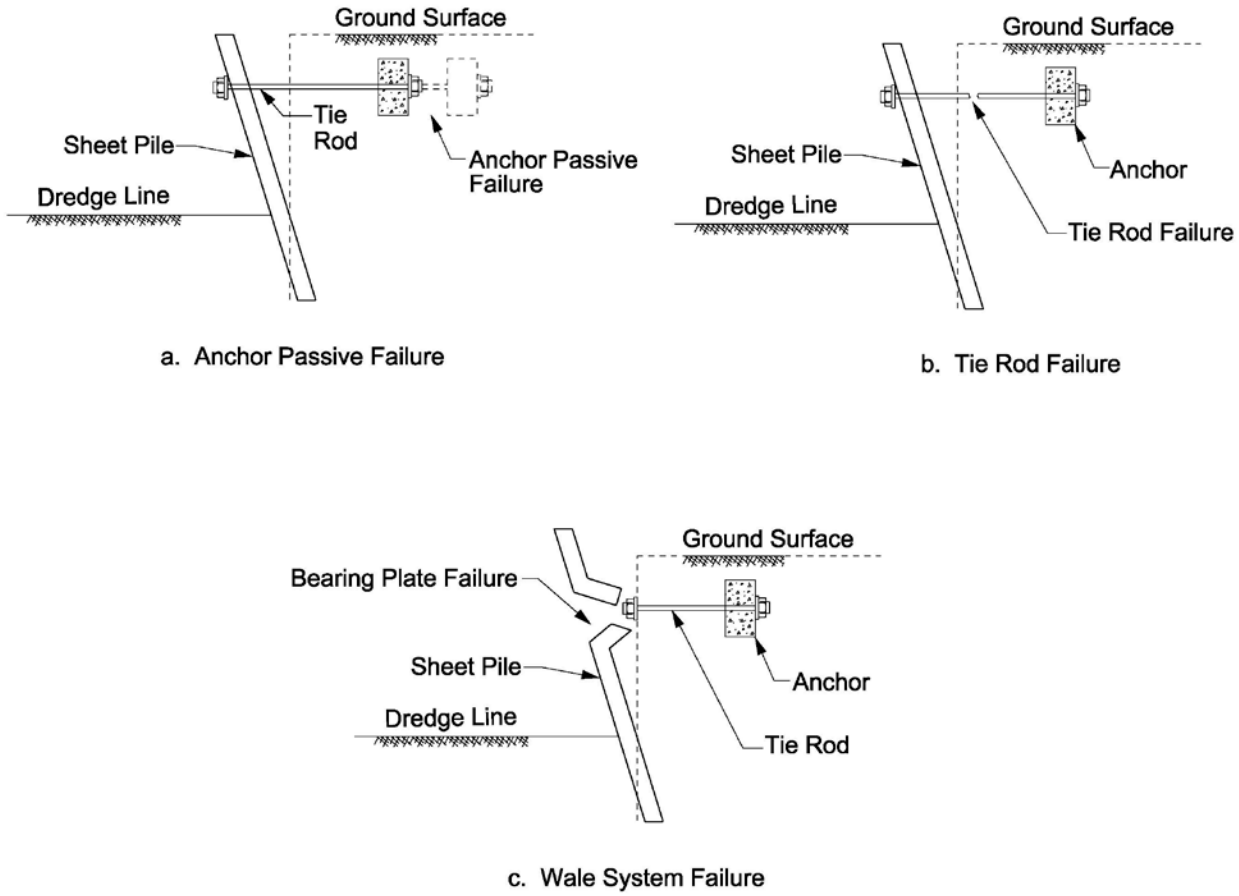

Figure 14.4-14
Flexural Failure of Non-Gravity Walls

14.4.7.2 Wall Settlement

Retaining walls shall be designed for the effects of total and differential foundation settlement at the Service I limit state, in accordance with **LRFD [11.5.2]** and 11.2. Maximum tolerable retaining wall total and differential foundation settlements are controlled largely by the potential for cosmetic and/or structural damage to facing elements, copings, barrier, guardrail, signs, pavements, utilities, structure foundations, and other highway appurtenances supported on or near the retaining wall.

14.4.7.2.1 Settlement Guidelines

The following table provides guidance for maximum tolerable vertical and total differential Settlement for various retaining wall types where Δh is the total settlement in inches and

Wall Type	Total Settlement Δh in inches	Total Differential Settlement $\Delta h1:L$ (in/in)
CIP semi-gravity cantilever walls	1-2	1:500
MSE walls with large pre-cast panel facing (panel front face area >30ft^2)	1-2	1:500
MSE walls with small pre-cast panel facing (panel front face area <30ft^2)	1-2	1:300
MSE walls with full-height cast-in-panel facing	1-2	1:500
MSE walls with modular block facing	2-4	1:200
MSE walls with geotextile /welded-wire facing	4-8	1:50-1:60
Modular block gravity walls	1-2	1:300
Concrete Crib walls	1-2	1:500
Bin walls	2-4	1:200
Gabion walls	4-6	1:50
Non-gravity cantilever and anchored walls	1-2.5	----

Table 14.4-3
Maximum Tolerable Settlement Guidelines for Retaining Walls

$\Delta h1:L$ is the ratio of the difference in total vertical settlement between two points along the wall base to the horizontal distance between the two points(L). It should be noted that the tolerance provided in Table 14.4-3 are for guidance purposes only. More stringent tolerances may be required to meet project-specific requirements.

14.4.7.3 Overall Stability

Overall stability of the walls shall be checked at the Service I limit state using appropriate load combinations and resistance factors in accordance with **LRFD [11.6.2.3].** The stability is evaluated using limit state equilibrium methods. The Modified Bishop, Janbu or Spencer method may be used for the analysis. The analyses shall investigate all potential internal, compound and overall shear failure surfaces that penetrate the wall, wall face, bench, back-cut, backfill, and/or foundation zone. The overall stability check is performed by the Geotechnical Engineering Unit for WISDOT designed walls.

14.4.7.4 Internal Stability

Internal stability checks including anchor pullout or soil reinforcement failure and/or structural failure checks are also required as applicable for different wall systems. As an example, see Figure 14.4-11 for internal stability failure of MSE walls. Internal stability checks must be performed at Strength Limits in accordance with **LRFD [11.5.3].**

14.4.7.5 Wall Embedment

The minimum wall footing embedment shall be 1.5 ft below the lowest adjacent grade in front of the wall.

The embedment depth of most wall footings should be established below the depths the foundation soil/rock could be weakened due to the effect of freeze thaw, shrink-swell, scour, scour, erosion, erosion, construction excavation. The potential scour elevation shall be established in accordance with 11.2.2.1.1 of the Bridge Manual.

The final footing embedment depth shall be based on the required geotechnical bearing resistance, wall settlement limitations, and all internal, external, and overall (global) wall stability requirements in *AASHTO LRFD* and the *Bridge Manual*.

14.4.7.6 Wall Subsurface Drainage

Retaining wall drainage is necessary to prevent hydrostatic pressure and frost pressure. Inadequate wall sub-drainage can cause premature deterioration, reduced stability and collapse or failure of a retaining wall.

A properly designed wall sub-drainage system is required to control potentially damaging hydrostatic pressures and seepage forces behind and around a wall. A redundancy in the sub-drainage system is required where subsurface drainage is critical for maintaining retaining wall stability. This is accomplished using a pervious granular fill behind the wall.

Pipe underdrain must be provided to drain this fill. Therefore, “Pipe Underdrain Wrapped 6-Inch” is required behind all gravity retaining walls where seepage should be relieved. Gabion walls do not require a pipe drain system as these are porous due to rock fill. It is best to place the pipe underdrain at the top of the wall footing elevation. However, if it is not possible to discharge the water to a lower elevation, the pipe underdrain could be placed higher.

Pipe underdrains and weep holes may discharge water during freezing temperatures. In urban areas, this may create a problem due to the accumulation of flow and ice on sidewalks. Consideration should be given to connect the pipe underdrain to the storm sewer system.

14.4.7.7 Scour

The probable depth of scour shall be determined by subsurface exploration and hydraulic studies if the wall is located in flood prone areas. Refer to 11.2.2.1.1 for guidance related to scour vulnerability and design of walls. All walls with shallow foundations shall be founded below the scour elevation.

14.4.7.8 Corrosion

All metallic components of WISDOT retaining wall systems subjected to corrosion, should be designed to last through the designed life of the walls. Corrosion protection should be designed in accordance with the criteria given in **LRFD [11.10.6].** In addition, **LRFD [11.8.7] thru [11.10]** also include design guidance for corrosion protection on non-gravity cantilever walls, anchored walls and MSE walls respectively.

14.4.7.9 Utilities

Walls that have or may have future utilities in the backfill should minimize the use of soil reinforcement. MSE, soil nail, and anchored walls commonly have conflicts with utilities and should not be used when utilities must remain in or below the reinforced soil zone unless there is no other wall option. Utilities that are encapsulated by wall reinforcement may not be accessible for replacement or maintenance. Utility agreements should specifically address future access if wall reinforcing will affect access.

14.4.7.10 Guardrail and Barrier

Guardrail and barrier shall meet the requirements of the Chapter 30 - Railings, *Facilities Development Manual,* Standard Plans, and *AASHTO LRFD*. In no case shall guardrail be placed through MSE wall or reinforced slope soil reinforcement closer than 3 ft from the back of the wall facing elements. Furthermore, the guard rail posts shall be installed through the soil reinforcement in a manner that prevents ripping, damage and distortion of the soil reinforcement. In addition, the soil reinforcement shall be designed to account for the reduced cross-section resulting from the guardrail post holes.

14.5 Cast-In-Place Concrete Cantilever Walls

14.5.1 General

A cast-in-place, reinforced concrete cantilever wall is a semi-gravity wall that consists of a base slab or footing from which a vertical wall or stem extends upward. Reinforcement is provided in both members to supply resistance to bending. These walls are generally founded on good bearing material. Cantilever walls shall not be used without pile support if the foundation stratum is prone to excessive vertical or differential settlement, unless subgrade improvements are made. Cantilever walls are typically designed to a height of 28 feet. For heights exceeding 28 feet, consideration should be given to providing a counterfort. Design of counterfort CIP walls is not covered in this chapter.

CIP cantilever walls shall be designed in accordance with *AASHTO LRFD,* design concepts presented in 14.4 and the *WisDOT Standard Specifications* including the special provisions.

14.5.2 Design Procedure for Cast-in-Place Concrete Cantilever Walls

The CIP wall shall be designed to resist lateral pressure caused by supported earth, surcharge loads and water in accordance with **LRFD [11.6].** The external stability, settlement, and overall stability shall be evaluated at the appropriate load limit states in accordance with **LRFD [11.5.5],** to resist anticipated failure mechanism. The structural components mainly stem and footing should be designed to resist flexural resistance in accordance with **LRFD [11.6.3].**

Figure 14.5-1 shows possible external stability failure and deep seated rotational failure mechanisms of CIP cantilever walls that must be investigated as part of the stability check.

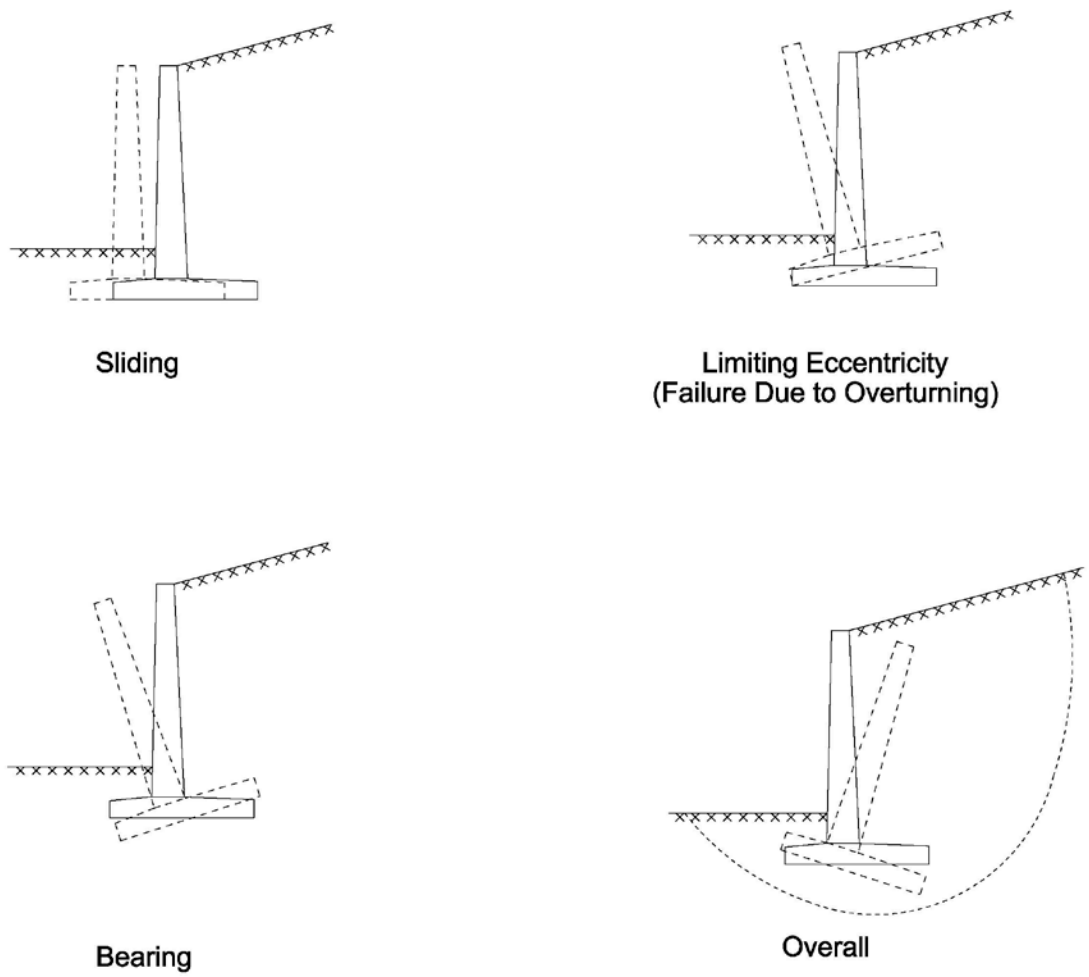

Figure 14.5-1
CIP Semi-Gravity Wall Failure Mechanism

14.5.2.1 Design Steps

The general design steps discussed in 14.4.1 shall be followed for the wall design. These steps as applicable for CIP cantilever walls are summarized below.

1. Establish project requirements including wall height, geometry and wall location as discussed in 14.1 of this chapter.

2. Perform Geotechnical investigation

3. Develop soil strength parameters

4. Determine preliminary sizing for external stability evaluation

5. Determine applicable unfactored or nominal loads

6. Evaluate factored loads for all appropriate limit states

7. Perform stability check to evaluate bearing resistance, eccentricity, and sliding as part of external stability

8. Estimate wall settlement and lateral wall movement to meet guidelines stated in Table 14.4-3.

9. Check overall stability and revise design, if necessary, by repeating steps 4 to 8.

It is assumed that steps 1, 2 and 3 have been performed prior to starting the design process.

14.5.3 Preliminary Sizing

A preliminary design can be performed using the following guideline.

1. The wall height and alignment shall be selected in accordance with the preliminary plan preparation process discussed in 14.1.

2. Preliminary CIP wall design may assume a stem top width of 12 inches. Stem thickness at the bottom is based on load requirements and/or batter. The front batter of the stem should be set at ¼ inch per foot for stem heights up to 28 feet. For stem heights from 16 feet to 26 feet inclusive, the back face batter shall be a minimum of ½ inch per foot, and for stem heights of 28 ft maximum and greater, the back face shall be ¾ inch per foot per stability requirements.

3. Minimum Footing thickness for stem heights equal to or less than 10 ft shall be 1.5 ft and 2.0 ft when the stem height exceeds 10 ft or when piles are used.

4. The base of the footing shall be placed below the frost line, or 4 feet below the finished ground line. Selection of shallow footing or deep foundation shall be based on the geotechnical investigation, which should be performed in accordance with guidelines presented in Chapter 11 - Foundation Support.

5. The final footing embedment shall be based on wall stability requirements including bearing resistance, wall settlement limitations, external stability, internal stability and overall stability requirements.

6. If the finished ground line is on a grade, the bottom of footings may be sloped to a maximum grade of 12 percent. If the grade exceeds 12 percent, place the footings level and use steps.

The designer has the option to vary the values of each wall component discussed in steps 2 to 6 above, depending on site requirements and to achieve economy. See Figure 14.5-2 for initial wall sizing guidance.

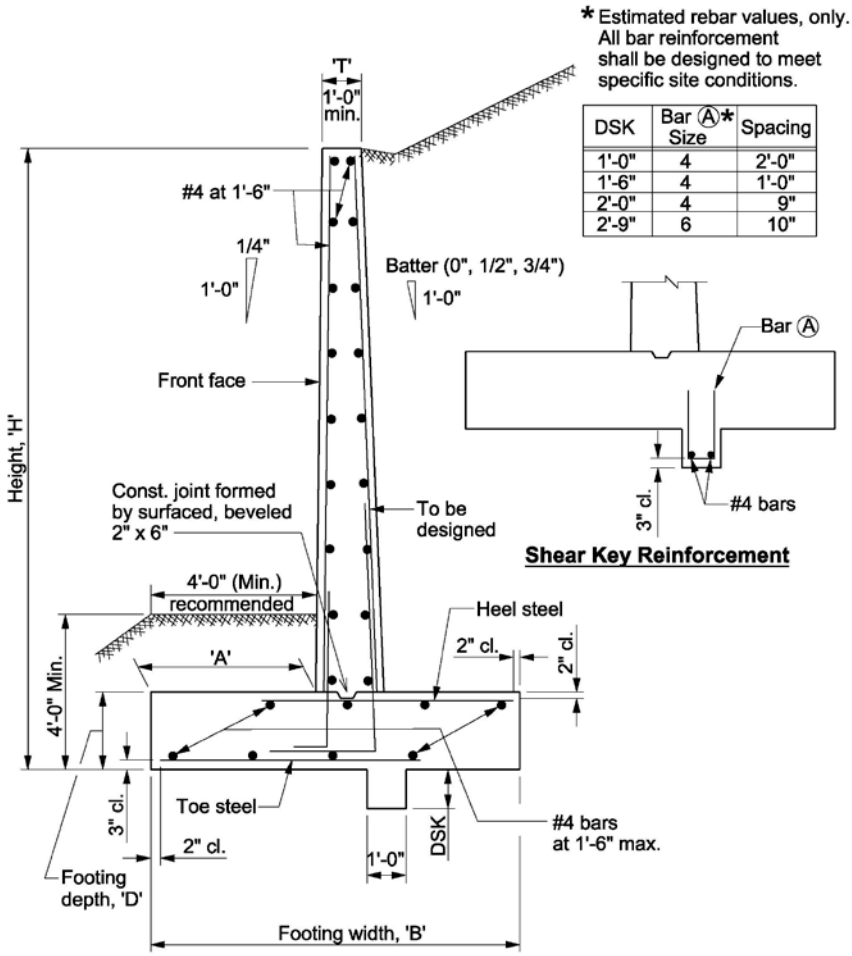

Figure 14.5-2
CIP Walls General Details

14.5.3.1 Wall Back and Front Slopes

CIP walls shall not be designed for backfill slope steeper than 2:1(H:V). Where practical, walls shall have a horizontal bench of 4.0 feet wide at the front face.

14.5.4 Unfactored and Factored Loads

Unfactored loads and moments are computed after establishing the initial wall geometry and using procedures defined in 14.4.5.4.5. A load diagram as shown in Figure14.4-1 for the earth pressure is developed assuming a triangular distribution plus additional pressures resulting from earth surcharge, water pressure, compaction or any other loads, etc. The material

properties for backfill soil, concrete and steel are given in 14.4.6. The foundation and retained earth properties as recommended in the Geotechnical Report shall be used for computing nominal loads.

The computed nominal loads discussed in 14.5.4 are multiplied by applicable load factors given in Table 14.4-1. Figure 14.4-8 shows load factor and load combinations along with their application for the load limit state evaluation. A summary of load factors and load combinations as applicable for a typical CIP cantilever wall is presented in Table 14.4-1 and **LRFD [3.4.1]**, respectively. Computed factored loads and moments are used for performing stability checks.

14.5.5 External Stability Checks

The external stability check includes checks for limiting eccentricity (overturning), bearing stress, and sliding at Strength I and Extreme Event II due to vehicle impact in cases where live load traffic is carried.

14.5.5.1 Eccentricity Check

The eccentricity of the retaining wall shall be evaluated in accordance with **LRFD [11.6.3.3]**. The location of the resultant force should be within 1/3 of base width of the foundation centroid (e<B/3) for foundations on soil, and within 0.45 of the base width of the foundation centroid (e<0.45B) for foundations on rock. If there is inadequate resistance to overturning (eccentricity value greater than limits given above), consideration should be given to either increasing the width of the wall base, or providing a deep foundation.

14.5.5.2 Bearing Resistance

The bearing resistance shall be evaluated at the strength limit state using factored loads and resistances. Bearing resistance of the walls founded directly on soil or rock shall be computed in accordance with 11.2 and **LRFD [10.6]**. The Bearing Resistance for walls on piles shall be computed in accordance with 11.3 and **LRFD [10.6]**. Figure 14.5-3 shows bearing stress criteria for a typical CIP wall on soil and rock respectively.

The vertical stress for footings on soil shall be calculated using:

$$\sigma_v = \frac{\sum V}{(B-2e)}$$

For walls founded on rock, the vertical stress is calculated assuming a linearly distributed pressure over an effective base area. The vertical stress for footings on rock shall be computed using:

$$\sigma_v = \frac{\Sigma V}{B}\left(1 \pm \frac{6e}{B}\right)$$

Where

ΣV	=	Summation of vertical forces
B	=	Base width
e	=	Eccentricity as shown in Figure 14.5-3 and Figure 14.5-4

If the resultant is outside the middle one-third of the wall base, then the vertical stress shall be computed using:

$$\sigma_{v\,max} = \left(\frac{2\sum V}{3\left(\frac{B}{2} - e\right)} \right)$$

$\sigma_{vmin} = 0$

The computed vertical stress shall be compared with factored bearing resistance in accordance with the **LRFD [10.6.3.1]** using following equation:

$q_r = \phi_b q_n > \sigma_v$

Where:

q_r	=	Factored bearing resistance
q_n	=	Nominal bearing resistance computed using **LRFD [10.6.3.1.2-a]**
σ_v	=	Vertical stress
B	=	Base width
e	=	Eccentricity as shown in Figure 14.5-3 and Figure 14.5-4

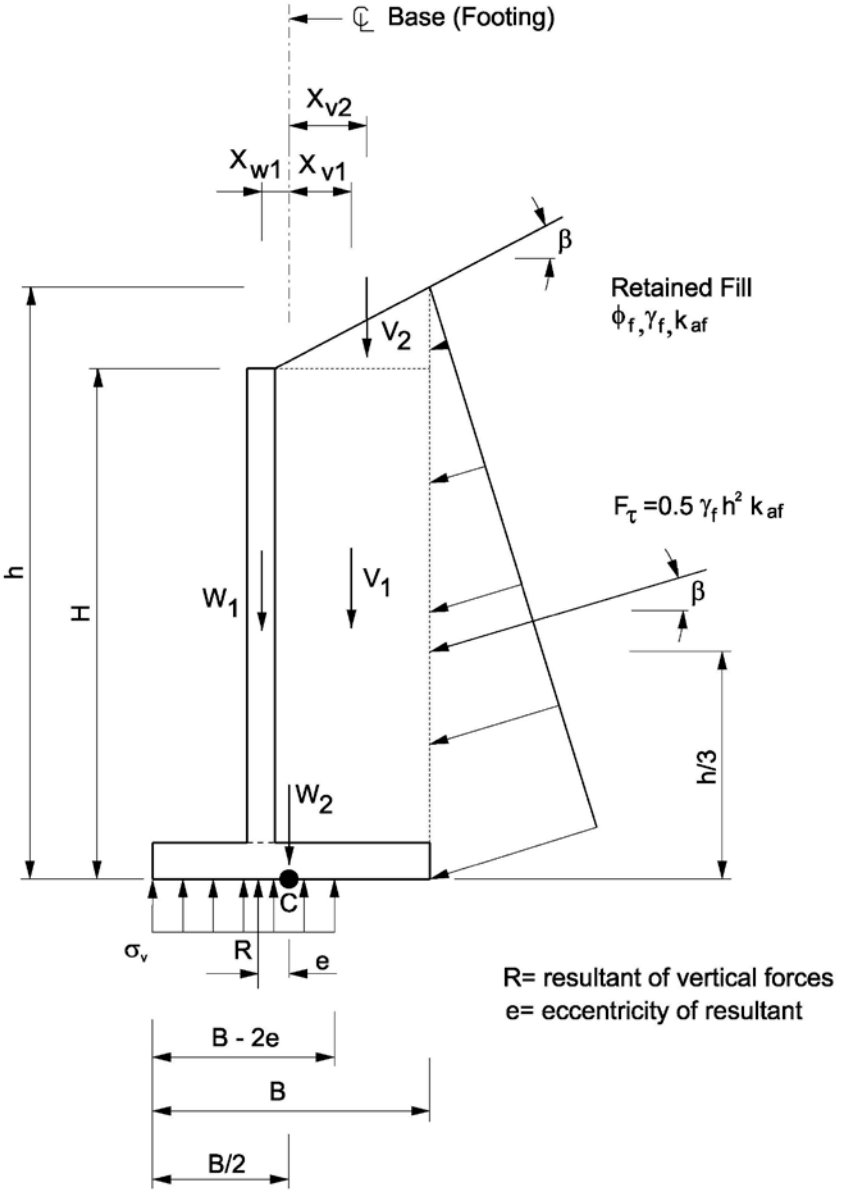

Summing Moments about Point C:

$$e = \frac{(F_T \cos\beta)h/3 - (F_T \sin\beta)B/2 - V_1 X_{V1} - V_2 X_{V2} + W_1 X_{W1}}{V_1 + V_2 + W_1 + W_2 + F_T \sin\beta}$$

Figure 14.5-3

Loading Diagram and Bearing Stress Criteria for CIP Cantilever Walls on Soil (source *AASHTO LRFD*)

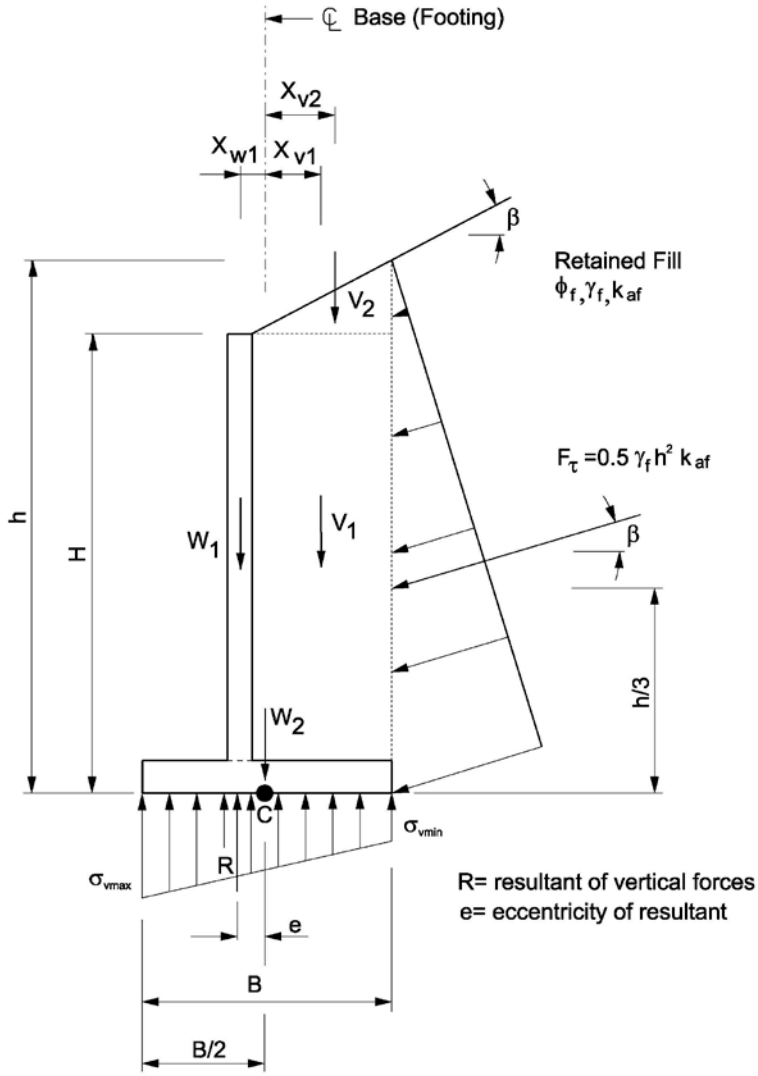

If e > B/6, σ_{vmin} will drop to zero, and as "e" increases, the portion of the heel of the footing which has zero vertical stress increases.

Summing Moments about Point C:

$$e = \frac{(F_T \cos\beta)h/3 - (F_T \sin\beta)B/2 - V_1 X_{V1} - V_2 X_{V2} + W_1 X_{W1}}{V_1 + V_2 + W_1 + W_2 + F_T \sin\beta}$$

Figure 14.5-4

Loading Diagram and Bearing Stress Criteria for CIP Cantilever Walls on Rock (source *AASHTO LRFD*)

14.5.5.3 Sliding

The sliding resistance of CIP cantilever walls is computed by considering the wall as a shallow footing resting on soil/rock or footing resting on piles in accordance with **LRFD [10.5]**. Sliding resistance of a footing resting on soil/rock foundation is computed in accordance with the **LRFD [10.6.3.4]** using the equation given below:

$$R_R = \phi R_n = \phi_\tau R_\tau + \phi_{ep} R_{ep}$$

Where:

R_R	=	Factored resistance against failure by sliding
R_n	=	Nominal sliding resistance against failure by sliding
ϕ_τ	=	Resistance factor for shear between soil and foundation per **LRFD [Table 10.5.5.2.2.1]**
R_τ	=	Nominal sliding resistance between soil and foundation
ϕ_{ep}	=	Resistance factor for passive resistance per **LRFD Table [10.5.5.2.2.1]**
R_{ep}	=	Nominal passive resistance of soil throughout the life of the structure

Contribution from passive earth pressure resistance against the embedded portion of the wall is neglected if the soil in front of the wall can be removed or weakened by scouring, erosion or any other means. Also, the live load surcharge is not considered as a stabilizing force over the heel of the wall when checking sliding.

If adequate sliding resistance cannot be achieved, footing design may be modified as follows:

- Increase the base width of the footing
- Construct a shear key
- Increase wall embedment to a sufficient depth, where passive resistance can be relied upon
- Incorporate a deep foundation, including battered piles (Usually a costly measure)

Guideline for selecting the shear key design is presented in 14.5.7.3. The design of wall footings resting on piles is performed in accordance with **LRFD [10.5]** and Chapter 11 - Foundation Support. Footings on piles resist sliding by the following:

1. Passive earth pressure in front of wall. Same as spread footing.
2. Lateral resistance of vertical piles as well as the horizontal components of battered piles. Maximum batter is 3 inches per foot. Refer to Chapter 11 - Foundation Support for lateral load capacity of piles.

3. Lateral resistance of battered or vertical piles in addition to horizontal component of battered piles. Refer to Chapter 11- Foundation Support for allowable lateral load capacity.

4. Do not use soil friction under the footing as consolidation of the soil may eliminate contact between the soil and footing.

14.5.5.4 Settlement

The settlement of CIP cantilever walls can be computed in accordance with guidelines and performance criteria presented in 14.4.7.2. The guideline for total and differential settlement is presented in Table 14.4-3. The actual performance limit can be changed for specific project requirements. For additional guidance contact the Geotechnical Engineering Unit.

14.5.6 Overall Stability

Investigate Service 1 load combination using an appropriate resistance factor and procedures discussed in **LRFD [11.6]** and 14.4.7.3. In general, the resistance factor, φ, may be taken as;

- 0.75 - where the geotechnical parameters are well defined, and slope does not support or contain a structural element.

- 0.65 – where the geotechnical parameters are based on limited information or the slope contains or supports a structural element.

14.5.7 Structural Resistance

The structural design of the stem and footing shall be performed in accordance with *AASHTO LRFD* and the design guidelines discussed below.

14.5.7.1 Stem Design

The initial sizing of the stem should be selected in accordance with criteria presented in 14.5.3. The stems of cantilever walls shall be designed as cantilevers supported at the footing. Axial loads (including the weight of the wall stem and frictional forces due to backfill acting on the wall stem) shall be considered in addition to the bending due to eccentric vertical loads, surcharge loads and lateral earth pressure if they control the design of the wall stems. The flexural design of the cantilever wall should be performed in accordance with *AASHTO LRFD*.

Loads from railings or parapets on top of the wall need not be applied simultaneously with live loads. These are dynamic loads which are resisted by the mass of the wall.

14.5.7.2 Footing Design

The footing of a cantilever wall shall be designed as a cantilever beam. The heel section must support the weight of the backfill soil and the shear component of the lateral earth pressure. All loads and moments must be factored using the criteria load factors discussed in 14.5.4. Use the following criteria when designing the footing.

1. Minimum footing thickness shall be selected in accordance with criteria presented in 14.5.3. The final footing thickness shall be based on shear at a vertical plane behind the stem.

2. For toe, design for shear at a distance from the face of the stem equal to the effective "d" distance of the footing. For heel, design for shear at the face of stem.

3. Where the footing is resting on piles, the piles shall be designed in accordance with criteria for pile design presented in Chapter 11 – Foundation Support. Embed piles six inches into footing. Place bar steel on top of the piles.

4. For spread footings, use a minimum of 3 inches clear cover at the bottom of footing. Use 2 inches clear cover for edge distance.

5. The critical sections for bending moments in footings shall be taken at the front and back faces of the wall stem. Bearing pressure along the bottom of the heel extension may conservatively be ignored. No bar steel is provided if the required area per foot is less than 0.05 square inches.

6. Design for heel moment, without considering the upward soil or pile reaction, is not required unless such a condition actually exists.

14.5.7.3 Shear Key Design

A shear key shall be provided to increase the sliding resistance when the factored sliding resistance determined using procedure discussed in 14.5.5.3 is inadequate. Use the following criteria when designing the shear key:

1. Place shear key in line with stem except under severe loading conditions.

2. The key width is 1'-0" in most cases. The minimum key depth is 1'-0".

3. Place shear key in unformed excavation against undisturbed material.

4. Analyze shear key in accordance with **LRFD [10.6.3.4]** and 14.5.5.3 .

5. The shape of shear key in rock is governed by the quality of the rock, but in general a 1 ft. by 1 ft key is appropriate.

14.5.7.4 Miscellaneous Design Information

1. Contraction joints shall be provided at intervals not exceeding 30 feet and expansion joints at intervals not exceeding 90 feet for reinforced concrete walls. Typical details of expansion and contraction joints are given in Figure 14.5-5. Expansion joints shall be constructed with a joint, filling material of the appropriate thickness to ensure the functioning of the joint and shall be provided with a waterstop capable of functioning over the anticipated range of joint movements.

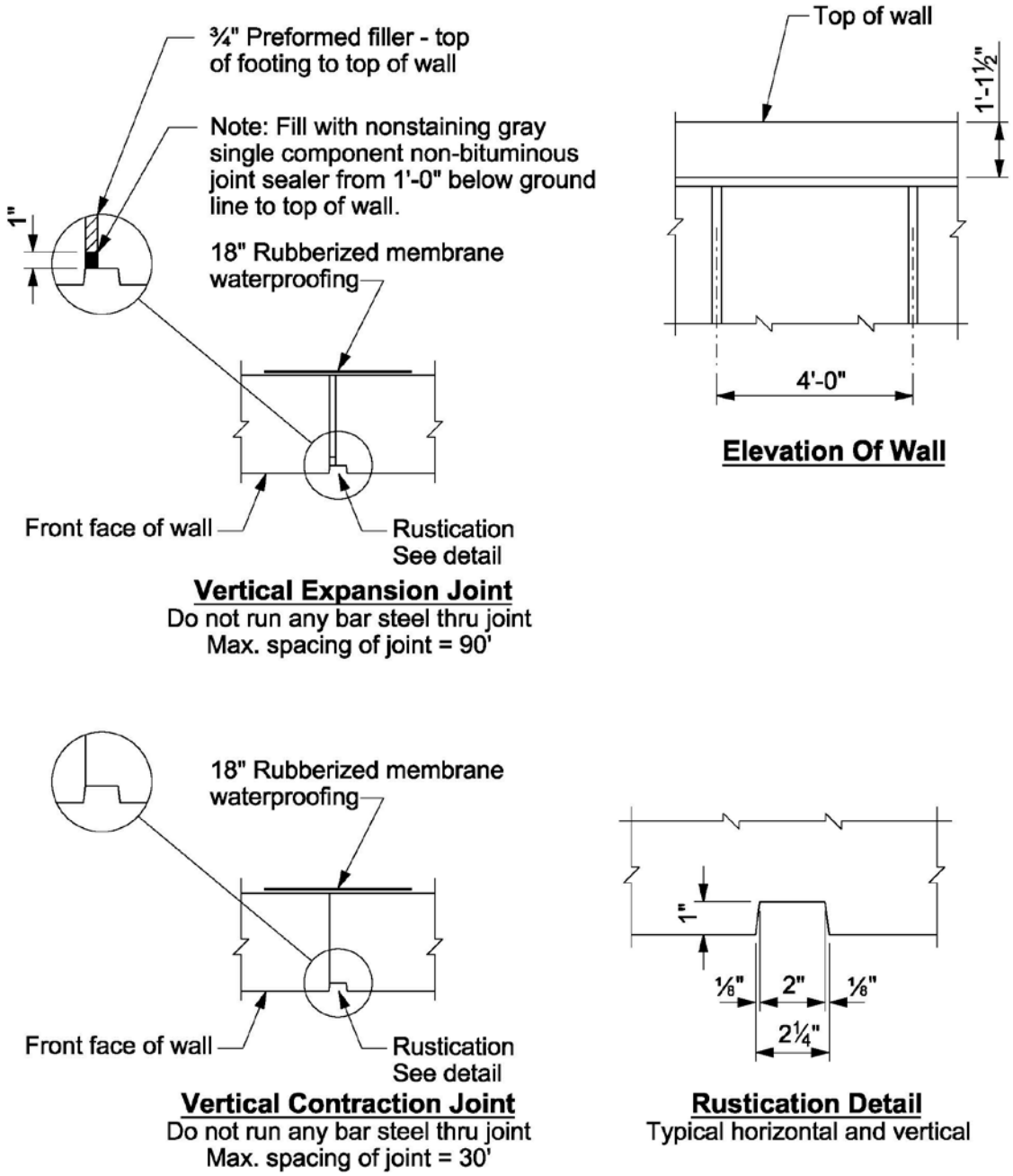

Figure 14.5-5
Retaining Wall Joint Details

2. Optional transverse construction joints are permitted in the footing, with a minimum spacing of three panel lengths. Footing joints should be offset a minimum of 1'-0 from wall joints. Run reinforcing bar steel thru footing joints.

3. The backfill material behind all cantilever walls shall be granular, free draining, non-expansive, non-corrosive material and shall be drained by weep holes with permeable material or other positive drainage systems, placed at suitable intervals and elevations. Structure backfill is placed behind the wall only to a vertical plane 18 inches beyond the face of footing. Lower limit is to the bottom of the footing.

4. If a wall is adjacent to a traveled roadway or sidewalk, use pipe underdrains in back of the wall instead of weep holes. Use a six-inch pipe wrapped underdrain located as detailed in this chapter. Provide a minimum slope of 0.5% and discharge to suitable drainage (i.e. a storm sewer system or ditch).

14.5.8 Design Tables for Cast-in-Place Concrete Cantilever Walls

Design tables suitable for use in preliminary design have been assembled and presented in this sub-section. These design tables are based on WisDOT design criteria and the material properties summarized in Table 14.5-1. Active earth pressure for the design tables was computed using the Rankine's equation for horizontal slopes and Coulomb's equation for surcharged slopes with the resultant perpendicular to the wall backface plus the wall friction angle. It was assumed that no water pressure exists. Service limit states were ignored in the analyses. The requirement of concrete is in accordance with **LRFD [5.4.2]** and 9.2. The requirement for bar steel is based on **LRFD [5.4.3]** and 9.3. The aforementioned assumptions were used in creating Table 14.5-2 thru Table 14.5-7. Refer to Figure 14.5-2 for details.

These tables should not be used if any of the assumptions or strength properties of the retained or foundation earth or the materials used for construction are different than those used in these design tables. The designer should also determine if the long-term or short-term soil strength parameters govern external stability analyses.

14.5.9 Design Examples

Refer to 14.18 for the design examples.

Design Criteria/Assumptions	Value
Concrete strength	3.5 ksi
Reinforcement yield strength	60 ksi
Concrete unit weight	150 pcf
Soil unit weight	120 pcf
Friction angle between fill and wall	21 degrees
Angle of Internal Friction (Soil - Backfill)	30 degrees

Angle of Internal Friction (Soil - Foundation)	34 degrees
Angle of Internal friction (Rock)	25 degrees
Cohesion (Soil)	0 psi
Cohesion (Rock)	20 psi
Soil Cover over Footing	4 feet
Stem Front Batter	0.25”/ft
Stem Back Batter	See Tables
Factored bearing resistance (On Soil)	**LRFD [10.6.3.1.2]**
Factored bearing resistance (On Rock)	20 ksf
Live Load Surcharge (Traffic)	240 psf
Live Load Surcharge (No Traffic)	100 psf
Lateral Earth Pressure (Horizontal Backfill)	Rankine
Lateral Earth Pressure (2:1 Backfill)	Coulomb

Table 14.5-1
Assumptions Summary for Preliminary Design of CIP Walls

HORIZONTAL BACKFILL – NO TRAFFIC – ON SOIL

H	B	A	D	Batter	Toe Steel			Heel Steel			Stem Steel		Shear	
(ft)	(ft)	(ft)	(ft)	(in/ft)	Size	Spa	L	Size	Spa	L	Size	Spa	Key	DSK
6	3'- 6"	0'- 9"	1'- 6"	0	---	---	---	---	---	---	---	---	NO	---
8	4'- 6"	1'- 0"	1'- 6"	0	---	---	---	4	12	3' - 5"	4	12	NO	---
10	5'- 3"	1'- 3"	1'- 6"	0	---	---	---	4	12	3' - 10"	4	12	NO	---
12	6'- 3"	1'- 6"	2'- 0"	0	---	---	---	4	10	4' - 7"	5	12	NO	---
14	7'- 3"	1'- 9"	2'- 0"	0	4	12	2' - 7"	5	9	5' - 6"	6	10	NO	---
16	8'- 0"	2'- 0"	2'- 0"	0.50	4	12	2' - 10"	5	8	5' - 5"	6	10	NO	---
18	8'- 9"	2'- 3"	2'- 0"	0.50	4	12	3' - 1"	7	11	6' - 7"	6	8	NO	---
20	9'- 9"	2'- 6"	2'- 0"	0.50	4	10	3' - 4"	7	8	7' - 3"	7	8	NO	---
22	10'- 6"	2'- 9"	2'- 3"	0.50	4	9	3' - 7"	9	12	9' - 2"	9	12	NO	---
24	11'- 6"	3'- 0"	2'- 9"	0.50	4	9	3' - 10"	9	11	9' - 10"	8	9	NO	---
26	12'- 0"	4'- 0"	2'- 9"	0.50	5	8	4' - 10"	8	8	8' - 5"	8	8	YES	1'- 6"
28	13'- 0"	5'- 0"	3'- 0"	0.75	7	11	6' - 6"	8	8	7' - 9"	8	7	YES	1'- 6"

Table 14.5-2
Reinforcement for Cantilever Retaining Walls

HORIZONTAL BACKFILL – TRAFFIC – ON SOIL

H	B	A	D	Batter	Toe Steel			Heel Steel			Stem Steel		Shear	
(ft)	(ft)	(ft)	(ft)	(in/ft)	Size	Spa	L	Size	Spa	L	Size	Spa	Key	DSK
6	4'- 6"	0'- 6"	1'- 6"	0	---	---	---	4	12	3' - 11"	---	---	NO	---
8	5'- 3"	0'- 9"	1'- 6"	0	---	---	---	4	11	4' - 5"	4	12	NO	---
10	6'- 6"	1'- 0"	1'- 6"	0	---	---	---	6	12	5' - 11"	4	8	NO	---
12	7'- 3"	1'- 3"	2'- 0"	0	---	---	---	6	11	6' - 5"	5	9	NO	---
14	8'- 3"	1'- 6"	2'- 0"	0	---	---	---	7	10	7' - 7"	6	9	NO	---
16	9'- 0"	2'- 3"	2'- 0"	0.50	4	12	3'- 1"	7	10	7'- 0 "	6	9	NO	---
18	9'- 3"	2'- 9"	2'- 0"	0.50	4	10	3'- 7"	7	10	6' - 7"	8	12	YES	1'- 0"
20	10'- 0"	3'- 6"	2'- 0"	0.50	5	9	4'- 4"	6	7	6'- 0 "	8	10	YES	1'- 0"
22	11'- 0"	4'- 3"	2'- 3"	0.50	5	7	5'- 1"	6	7	6' - 2"	7	7	YES	1'- 0"
24	11'- 9"	5'- 0"	2'- 6"	0.50	7	10	6'- 6"	6	7	6'- 0 "	9	11	YES	1'- 6"
26	12'- 9"	5'- 9"	2'- 9"	0.50	8	11	7'- 9"	6	7	6' - 2"	9	9	YES	1'- 6"
28	14'- 3"	7'- 0"	3'- 0"	0.75	9	11	9'- 7"	6	7	5' - 9"	9	9	YES	2'- 0"

Table 14.5-3
Reinforcement for Cantilever Retaining Walls

2:1 BACKFILL – NO TRAFFIC – ON SOIL

H	B	A	D	Batter	Toe Steel			Heel Steel			Stem Steel		Shear	
(ft)	(ft)	(ft)	(ft)	(in/ft)	Size	Spa	L	Size	Spa	L	Size	Spa	Key	DSK
6	4'- 6"	2'- 0"	1'- 6"	0	---	---	---	---	---	---	4	12	YES	1'- 0"
8	6'- 0"	2'- 6"	1'- 6"	0	4	12	3'- 4"	4	12	3' - 5"	4	9	YES	1'- 0"
10	7'- 6"	2'- 0"	1'- 6"	0	4	12	2'- 10"	6	11	5' - 11"	6	9	YES	1'- 0"
12	9'- 0"	1'- 9"	2'- 0"	0	4	12	2'- 7"	7	9	8' - 2"	8	11	YES	1'- 0"
14	10'- 6"	2'- 6"	2'- 6"	0	4	12	3'- 4"	8	10	9' - 8"	9	10	YES	1'- 6"
16	12'- 3"	3'- 9"	2'- 9"	0.50	5	12	4'- 7"	7	7	8' - 10"	9	10	YES	2'- 0"
18	14'- 0"	4'- 6"	3'- 0"	0.50	6	12	5'- 7"	9	9	11' - 2"	10	10	YES	2'- 0"
20	15'- 6"	5'- 6"	3'- 3"	0.50	7	11	7'- 0"	10	11	12' - 8"	10	8	YES	2'- 9"

Table 14.5-4
Reinforcement for Cantilever Retaining Walls

HORIZONTAL BACKFILL – NO TRAFFIC – ON ROCK

H	B	A	D	Batter	Toe Steel			Heel Steel			Stem Steel	
(ft)	(ft)	(ft)	(ft)	(in/ft)	Size	Spa	L	Size	Spa	L	Size	Spa
6	2'- 9"	0'- 9"	1'- 6"	0	---	---	---	---	---	---	4	12
8	3'- 6"	1'- 0"	1'- 6"	0	---	---	---	---	---	---	4	12
10	4'- 3"	1'- 3"	1'- 6"	0	---	---	---	4	12	2' - 10"	4	12
12	5'- 0"	1'- 6"	2'- 0"	0	4	12	2'- 4"	4	12	3' - 4"	5	12
14	5'- 9"	1'- 9"	2'- 0"	0	4	12	2'- 7"	4	12	3' - 10"	6	10
16	6'- 6"	2'- 0"	2'- 0"	0.50	4	12	2'- 10"	4	11	3' - 8"	6	10
18	7'- 3"	2'- 3"	2'- 0"	0.50	4	11	3'- 1"	5	12	4' - 3"	6	8
20	7'- 9"	2'- 6"	2'- 0"	0.50	5	11	3'- 4"	5	9	4' - 5"	8	11
22	8'- 6"	2'- 9"	2'- 0"	0.50	5	9	3'- 7"	6	10	5' - 1"	7	7
24	9'- 3"	3'- 0"	2'- 0"	0.50	6	10	4'- 1"	7	10	6'- 0 "	9	11
26	10'- 0"	3'- 3"	2'- 3"	0.50	6	9	4'- 4"	8	11	7' - 2"	10	12
28	10'- 6"	3'- 6"	2'- 6"	0.75	6	8	4'- 7"	8	11	6' - 9"	9	9

Table 14.5-5
Reinforcement for Cantilever Retaining Walls

HORIZONTAL BACKFILL – TRAFFIC – ON ROCK

H	B	A	D	Batter	Toe Steel			Heel Steel			Stem Steel	
(ft)	(ft)	(ft)	(ft)	(in/ft)	Size	Spa	L	Size	Spa	L	Size	Spa
6	3'- 6"	0'- 9"	1'- 6"	0	---	---	---	---	---	---	4	12
8	4'- 3"	1'- 0"	1'- 6"	0	---	---	---	4	12	3' - 2"	4	12
10	5'- 0"	1'- 3"	1'- 6"	0	---	---	---	4	12	3' - 7"	4	8
12	5'- 9"	1'- 6"	2'- 0"	0	---	---	---	4	12	4' - 1"	5	9
14	6'- 6"	1'- 9"	2'- 0"	0	4	12	2'- 7"	4	8	4' - 6"	6	9
16	7'- 3"	2'- 0"	2'- 0"	0.50	4	12	2'- 10"	4	7	4' - 5"	7	12
18	8'- 0"	2'- 3"	2'- 0"	0.50	4	11	3'- 1"	6	11	5' - 4"	8	12
20	8'- 9"	2'- 6"	2'- 3"	0.50	4	9	3'- 4"	6	9	5' - 9"	8	10
22	9'- 6"	2'- 9"	2'- 6"	0.50	5	12	3'- 7"	7	11	6' - 8"	9	12
24	10'- 3"	3'- 0"	2'- 9"	0.50	5	10	3'- 10"	7	9	7' - 1"	9	11
26	11'- 0"	4'- 0"	2'- 6"	0.50	7	10	5'- 6"	8	11	7' - 5"	8	7
28	11'- 9"	4'- 3"	2'- 9"	0.75	6	7	5'- 4"	8	11	7' - 3"	8	7

Table 14.5-6
Reinforcement for Cantilever Retaining Walls

2:1 BACKFILL – NO TRAFFIC – ON ROCK

H	B	A	D	Batter	Toe Steel			Heel Steel			Stem Steel	
(ft)	(ft)	(ft)	(ft)	(in/ft)	Size	Spa	L	Size	Spa	L	Size	Spa
6	3'- 9"	2'- 0"	1'- 6"	0	---	---	---	---	---	---	4	12
8	5'- 0"	2'- 9"	1'- 6"	0	4	12	3'- 7"	4	12	2' - 2"	4	12
10	6'- 0"	3'- 3"	1'- 6"	0	4	9	4'- 1"	4	12	2' - 7"	6	12
12	7'- 0"	4'- 0"	2'- 0"	0	5	11	4'- 10"	4	12	2' - 10"	6	9
14	8'- 3"	4'- 6"	2'- 0"	0	6	10	5'- 7"	4	12	3' - 7"	8	11
16	9'- 0"	5'- 3"	2'- 0"	0.50	8	11	7'- 3"	4	12	2' - 11"	8	11
18	10'- 0"	4'- 9"	2'- 0"	0.50	8	10	6'- 9"	6	11	4' - 10"	9	10
20	11'- 3"	4'- 0"	2'- 6"	0.50	7	10	5'- 6"	8	10	8'- 0 "	11	11
22	12'- 3"	4'- 6"	3'- 0"	0.50	7	9	6'- 0"	9	12	9' - 2"	11	9

Table 14.5-7
Reinforcement for Cantilever Retaining Walls

14.5.10 Summary of Design Requirements

1. Stability Check

    a. Strength I and Extreme Event II limit states

        - Eccentricity
        - Bearing Stress
        - Sliding

    b. Service I limit states

        - Overall Stability
        - Settlement

2. Foundation Design Parameters

    Use values provided by Geotechnical analysis

3. Concrete Design Data

    - f'c = 3500 psi
    - fy = 60,000 psi

4. Retained Soil

    - Unit weight = 120 lb/ft^3
    - Angle of internal friction - use value provided by Geotechnical analysis

5. Soil Pressure Theory

    - Coulomb theory for short heels or Rankine theory for long heels at the discretion of the designer.

6. Surcharge Load

    - Traffic live load surcharge = 2 feet = 240 lb/ft^2
    - If no traffic surcharge, use 100 lb/ft^2

7. Load Factors

Group	γ_{DC}	γ_{EV}	γ_{LSv}	γ_{LSh}	γ_{EH}	γ_{CT}	Probable use
Strength I-a	0.90	1.00	1.75	1.75	1.50		Sliding, eccentricity
Strength I-b	1.25	1.35	1.75	1.75	1.50		Bearing /wall strength
Extreme II-a	0.90	1.00	-	-	-	1.00	Sliding, eccentricity
Extreme II-b	1.25	1.35	-	-	-	1.00	Bearing
Service I	1.00	1.00	1.00	1.00	1.00		Global/settlement/wall crack control

Table 14.5-8
Load Factor Summary for CIP Walls

8. Bearing Resistance Factors

- ϕ_b = 0.55 **LRFD [Table 11.5.7-1]**

9. Sliding Resistance Factors

- ϕ_τ = 1.0 **LRFD [Table 11.5.7-1]**
- ϕ_{ep} = 0.5 **LRFD Table [10.5.5.2.2-1]**

14.6 Mechanically Stabilized Earth Retaining Walls

14.6.1 General Considerations

Mechanically Stabilized Earth (MSE) is the term used to describe the practice of reinforcing a mass of soil with either metallic or geosynthetic soil reinforcement which allows the mass of soil to function as a gravity retaining wall structure. The soil reinforcement is placed horizontally across potential planes of shear failure and develops tension stresses to keep the soil mass intact. The soil reinforcement is attached to a wall facing located at the front face of the wall.

The design of MSE walls shall meet the *AASHTO LRFD* requirements in accordance with 14.4.2. The service life requirement for both permanent and temporary MSE wall systems is presented in 14.4.3.

The MSE walls shall be designed for external stability of the wall system and internal stability of the reinforced soil mass. The global stability shall also be considered as part of design evaluation. MSE walls are proprietary wall systems and the design responsibilities with respect to global, external, and internal stability as well as settlement are shared between the designer (WisDOT or Consultant) and contractor. The designer is responsible for the overall stability, preliminary external stability and settlement whereas the contractor is responsible for the internal stability, compound stability and structural design of the wall. The responsibilities of the designer and contractor are outlined in 14.6.3.2. The design and drawings of MSE walls provided by the contractor must also be in compliance with the WisDOT special provisions as stated in 14.15.2 and 14.16

The guidelines provided herein for MSE walls do not apply to geometrically complex MSE wall systems such as tiered walls (walls stacked on top of one another), back-to-back walls, or walls which have trapezoidal sections. Design guidelines for these cases are provided in publications FHWA-NHI-10-024 and FHWA-NHI-10-025.

Horizontal alignment and grades at the bottom and top of the wall are determined by the design engineer. The design must be in compliance with the WisDOT special provisions for the project and the policy and procedures as stated in the *Bridge Manual* and *FDM*.

14.6.1.1 Usage Restrictions for MSE Walls

Construction of MSE walls with either block or panel facings should not be used when any of the following conditions exist:

1. If the available construction limit behind the wall does not meet the soil reinforcement length requirements.

2. Sites where extensive excavation is required or sites that lack granular soils and the cost of importing suitable fill material may render the system uneconomical.

3. At locations where erosion or scour may undermine or erode the reinforced fill zone or any supporting leveling pad.

4. Soil is contaminated by corrosive material such as acid mine, drainage, other industrial pollutants, or any other condition which increases corrosion rate, such as the presence of stray electrical currents.

5. There is potential for placing buried utilities within (or below) the reinforced zone unless access is provided to utilities without disrupting reinforcement and breakage or rupture of utility lines will not have a detrimental effect on the stability of the wall. Contact WisDOT's Structures Design Section.

14.6.2 Structural Components

The main structural elements or components of an MSE wall are discussed below. General elements of a typical MSE wall are shown in Figure 14.6-1. These include:

- Selected Earthfill in the Reinforced Earth Zone
- Reinforcement
- Wall Facing Element
- Leveling Pad
- Wall Drainage

A combination of different wall facings and reinforcement provide a choice of selecting an MSE wall which can be used for several different functions.

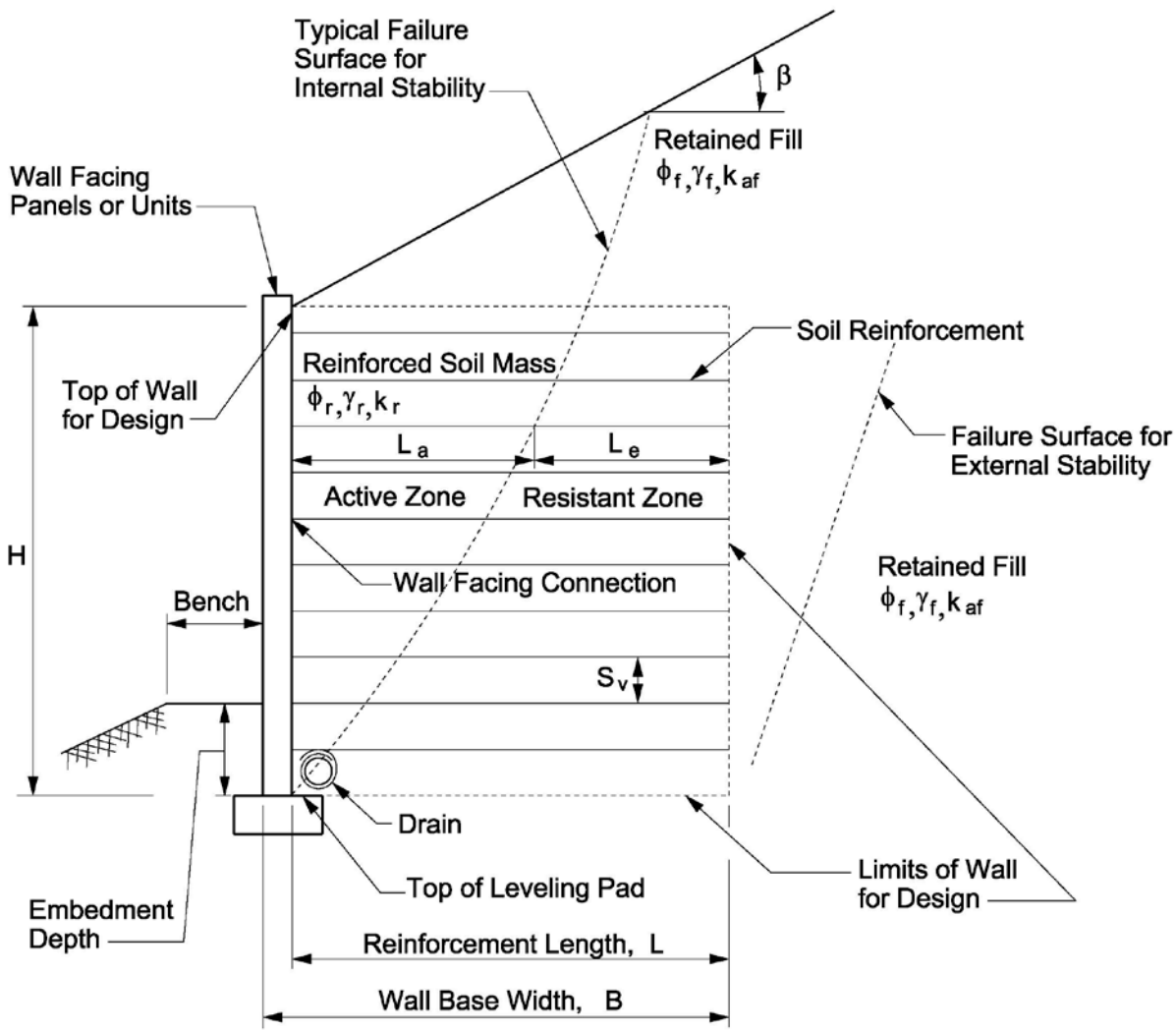

Figure 14.6-1
Structural Components of MSE Walls

14.6.2.1 Reinforced Earthfill Zone

The reinforced backfill to be used to construct the MSE wall shall meet the criteria in the wall specifications. The backfill shall be free from organics, or other deleterious material. It shall not contain foundry sand, bottom ash, blast furnace slag, or other potentially corrosive material. It shall meet the electrochemical criteria given in Table 14.6-1.

Reinforcement Material	Property	Criteria
Metallic	Resistivity	> 3000 ohm-cm
Metallic	Chlorides	< 100 ppm
Metallic	Sulfates	< 200 ppm
Metallic	pH	5.0 < pH < 10.0
Geosynthetic	pH	4.5 < pH < 9.0
Metallic/Geosynthetic	Organic Content	< 1.0 %

Table 14.6-1
Electrochemical Properties of Reinforced Fill MSE Walls

An angle of internal friction of 30 degrees and unit weight of 120 pcf shall be used for the stability analyses as stated in 14.4.6. If it is desired to use an angle of internal friction greater than 30 degrees, it shall be determined by the most current wall specifications.

14.6.2.2 Reinforcement:

Soil reinforcement can be either metallic (strips or bar grids like welded wire fabric) or non-metallic including geotextile and geogrids made from polyester, polypropylene, or high density polyethylene. Metallic reinforcements are also known as inextensible reinforcement and the non-metallic as extensible. Inextensible reinforcement deforms less than the compacted soil infill used in MSE walls, whereas extensible reinforcement deforms more than compacted soil infill

The metallic or inextensible reinforcement is mild steel, and usually galvanized or epoxy coated. Three types of steel reinforcement are typically used:

Steel Strips: The steel strip type reinforcement is mostly used with segmental concrete facings. Commercially available strips are ribbed top and bottom, 2 to 4 inch wide and 1/8 to 5/32 inch thick.

Steel grids: Welded wire steel grids using two to six W7.5 to W24 longitudinal wires spaced either at 6 or 8 inches. The transverse wire may vary from W11 to W20 and are spaced from 9 to 24 inches apart.

Welded wire mesh: Welded wire meshes spaced at 2 by 2 inch of thinner steel wire can also be used.

The galvanized steel reinforcement that is used for soil reinforcement is oversized in cross sectional areas to account for the corrosion that occurs during the life of the structure and the resulting loss of section. The net section remaining after corrosion at the end of the design service life is used to check design requirements

The non-metallic or extensible reinforcement includes the following:

Geogrids: The geogrids are mostly used with modular block walls.

Geotextile Reinforcement: High strength geotextile can be used principally with wrap-around and temporary wall construction.

Corrosion of the wall anchors that connect the soil reinforcement to the wall face must also be accounted for in the design.

14.6.2.3 Facing Elements

The types of facings element used in the different MSE walls mainly control aesthetics, provide protection against backfill sloughing and erosion, and may provide a drainage path in certain cases. A combination of different wall facings and reinforcement provide a choice of selecting an MSE wall which can be used for several different functions.

Major facing types are:

- Segmental precast concrete panels
- Dry cast or wet cast modular blocks
- Full height pre-cast concrete panels (tilt-up)
- Cast-in-place concrete facing
- Geotextile-reinforced wrapped face
- Geosynthetic /Geogrid facings
- Welded wire grids

Segmental Precast Concrete Panels

Segmental precast concrete panels include small panels (<30 sq ft) to larger (>30 sq ft) with a minimum thickness of 5-½ inches and are of a square, rectangular, cruciform, diamond, or hexagonal geometry. The geometric pattern of the joints and the smooth uniform surface finish of the factory provided precast panels give an aesthetically pleasing appearance. Segmental precast concrete panels are proprietary wall components.

Wall panels are available in a plain concrete finish or numerous form liner finishes and textures. An exposed aggregate finish is also available along with earth tone colors. Although color can be obtained by adding additives to the concrete mix it is more desirable to obtain color by applying concrete stain and/or paint at the job site. Aesthetics do affect wall costs.

WisDOT requires that MSE walls utilize precast concrete panels when supporting traffic live loads which are in close proximity to the wall. Panels are also allowed as components of an

abutment structure. Either steel strips or welded wire fabric is allowed for soil reinforcement when precast concrete panels are used as facing of the MSE wall system.

Walls with curved alignments shall limit radii to 50 feet for 5 feet wide panels and 100 feet for 10 feet wide panels. Typical joint openings are not suitable for wall alignments following a tighter curve. Special joints or special panels that are less than 5 feet wide may be able to accommodate tighter curves. In general, MSE wall structures with panel type facings shall be limited to wall heights of 33 feet. Contact Structures Design Section for approval on case by case basis.

Concrete Modular Blocks Facings

Concrete modular block retaining walls are constructed from modular blocks typically weighing from 40 to 100 pounds each, although blocks over 200 pounds are rarely used. Nominal front to back width ranges between 8 to 24 inches. Modular blocks are available in a large variety of facial textures and colors providing a variety of aesthetic appearances. The shape of the blocks usually allows the walls to be built along a curve, either concave (inside radius) or convex (outside radius). The blocks or units are dry stacked meaning mortar or grout is not used to bond the units together except for the top two layers. Figure 14.6-2 shows various types of blocks available commercially. Figure 14.6-3 shows a typical modular block MSE wall system along with other wall components. Most modular block MSE walls are reinforced with geogrids.

Modular blocks can be either dry cast or wet cast. Dry cast (small) blocks are mass produced by using a zero slump concrete that allows forms to be stripped faster than wet cast (large) blocks. MSE walls usually use dry cast blocks since they are usually a cheaper facing and wall stability is provided by the reinforced mass. Gravity walls rely on facing size and mass for wall stability. For minor walls dry cast blocks are typically used and for taller gravity walls wider wet cast blocks are normally required to satisfy stability requirements.

Concrete modular blocks are proprietary wall component systems. Each proprietary system has its own unique method of locking the units together to resist the horizontal shear forces that develop. Fiberglass pins, stainless steel pins, glass filled nylon clips and mechanical interlocking surfaces are some of the methods utilized. Any pins or hardware must be manufactured from corrosion resistant materials.

During construction of these systems, the voids are filled with granular material such as crushed stone or gravel. Most of the systems have a built in or automatic set-back (incline angle of face to the vertical) which is different for each proprietary system. Blocks used on WisDOT projects must be of one piece construction. A minimum weight per block or depth of block (distance measured perpendicular to wall face) is not specified on WisDOT projects. The minimum thickness allowed of the front face is 4 inches (measured perpendicular from the front face to inside voids greater than 4 square inches). Also the minimum allowed thickness of any other portions of the block (interior walls or exterior tabs, etc.) is 2 inches.

Alignments that are not straight (i.e. kinked or curved) shall use 90 degree corners or curves. The minimum radius should be limited to 8 feet. For a concave wall the radius is measured to the front face of the bottom course. For convex walls the radius is measured to the front face of the top course. In no case shall the radius be less than 6 feet. It is WisDOT policy to design

modular block MSE walls for a maximum height of 22 ft (measured from the top of the leveling pad to the top of the wall).

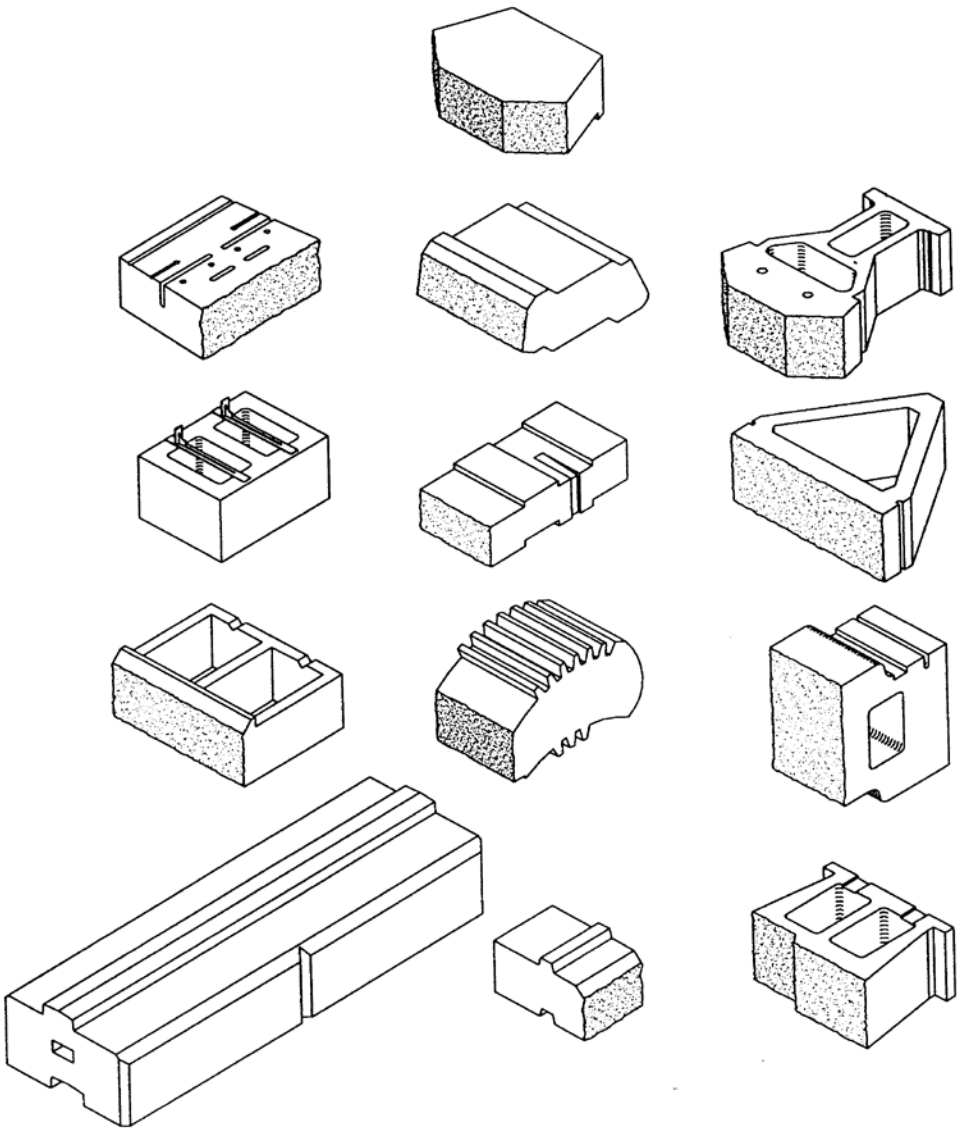

Figure 14.6-2
Modular Blocks
(Source FHWA-NHI-10-025)

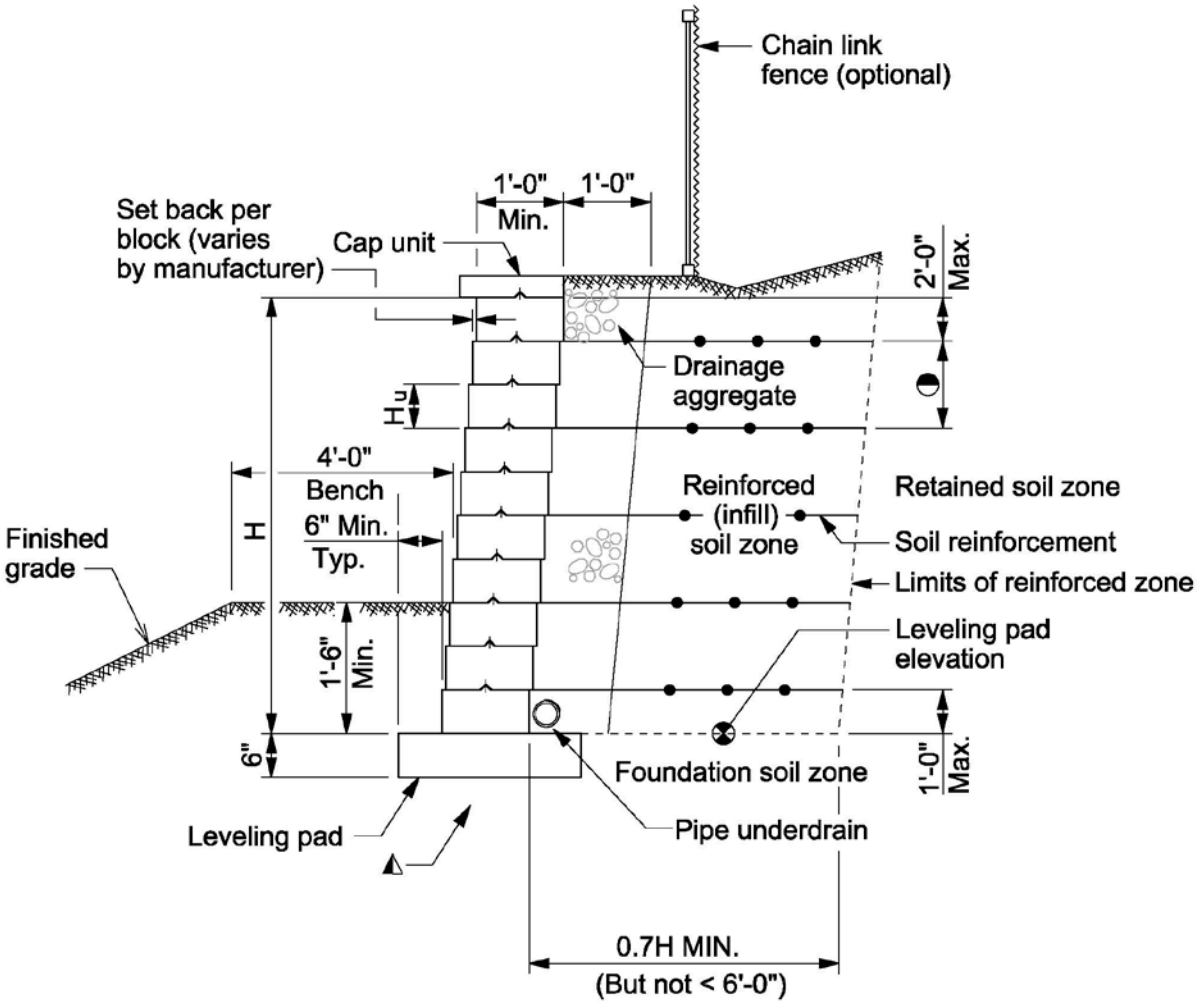

Modular Block MSE Wall

◭ Ground improvement meaures should be taken when the soil below the levelling pad is poor or subject to frost heave.

◑ Maximum vertical spacing of soil reinforcement layers shall be two times the block depth (Hu) or 32 inches, whichever is less.

Figure 14.6-3
Typical Modular Block MSE Walls

MSE Wire-Faced Facing

Welded wire fabric facing is used to build MSE wire-faced walls. These are essentially MSE walls with a welded wire fabric facing instead of a precast concrete facing. The wire size, spacing and patterns used in the facing are developed from performance data of full size wall tests and from applications in actual walls. A test to determine the connection strength between the soil reinforcement and the facing panels is required. Some systems do not use a connection because the ground reinforcement and facing panel are of one piece construction.

MSE wire-faced wall systems usually incorporate a backing mat behind the front facing. A fine metallic screen and geotextile fabric is placed behind the backing mat (or behind the facing if a backing mat is not used) to prevent the backfill from passing thru the front face.

MSE wire-faced walls can tolerate considerable differential settlement because of the flexibility of the wire facing. The limiting differential settlement is 1/50. The flexibility of the wire facing results in face bulging between ground reinforcement. The actual amount varies per system but normally is less than one inch. Recommended limits on bulging are 2" for permanent walls and 3" for temporary walls. This type of wall works well when a permanent wall facing can be placed after settlement/movement has occurred.

When MSE wire-faced walls are used for permanent wall applications, all steel components must be galvanized. When used for temporary wall applications black steel (non-galvanized) may be used since the walls are usually left in place and buried.

Temporary MSE wire-faced walls can be used as temporary shoring if site conditions permit. This wall type can also be used when staged construction is required to maintain traffic when an existing roadway is being raised and/or widened in conjunction with bridge approaches, railroad crossings or road reconstruction.

Cast-In- Place Concrete Facing

MSE walls with cast in place concrete facings are identical to MSE wire faced walls except a cast-in-place concrete facing is added after the wire face wall is erected. Modifications are made to the standard wire face wall detail to anchor the concrete facing to the wire facing and soil reinforcement. They are usually used when a special aesthetic facial treatment is required without the numerous joints that are common to precast panels. They can also be used where differential or total settlement is above tolerable limits for other wall types. A MSE wire faced wall can be constructed and allowed to settle with the concrete facing added after consolidation of the foundation soils has occurred.

The cast-in-place concrete facing shall be a minimum of 8-inches thick and contain coated or galvanized reinforcing steel. This is required because the panels and/or anchor that extend into the cast-in-place concrete are galvanized and a corrosion cell would be created if black steel contacts galvanized steel. All wire ties and bar chairs used in the cast–in-place concrete must also be coated or galvanized. Note that the 8-inch minimum wall thickness will occur at the points of maximum panel bulging and that the wall will be thicker at other locations. Also note that the 8-inch minimum is measured from the trough of any form liner or rustication.

Vertical construction joints are required in the cast-in-place concrete facing to allow for expansion and contraction and to allow for some differential settlement. Closer spacing of vertical construction joints is required when differential settlement may occur, but by delaying the placement of the cast-in-place concrete, the effects of differential settlement is minimized. Higher walls also require closer spacing of vertical construction joints if differential settlement is anticipated. Horizontal construction joints may disrupt the flow of a special aesthetic facial treatment and are sometimes not allowed for that reason. The designer should specify if optional horizontal construction joints are allowed. Cork filler is placed at vertical construction joints because cork is compressible and will allow some expansion and rotation to occur at the joint. An expandable polyvinyl chloride waterstop (PCW) is used on the back side of a vertical construction joint. Since forms are only used at the front face of the wall the PCW can be attached to a 10-inch board which is supported by the wire facing. The 8-inch minimum wall thickness may be decreased at the location of the vertical construction joint to accommodate the PCW and its support board.

Geosynthetic Facing

Geosynthetic reinforcements are looped around at the facing to form the exposed face of the MSE Wall. These faces are susceptible to ultraviolet light degradation, vandalism, and damage due to fire. Geogrid used for soil reinforcement can be looped around to form the face of the completed retaining structure in a similar manner to welded wire mesh and fabric facing. This facing is generally used in temporary applications. Similar to wire faced walls, these walls typically have a geotextile behind the geogrids, to prevent material from passing through the face.

14.6.3 Design Procedure

14.6.3.1 General Design Requirements

The procedure for design of an MSE wall requires evaluation of external stability and internal stability (structural design) at Strength Limit States and overall stability and vertical/lateral movement at Service Limit State. The Extreme Event II load combination is used to design and analyze for vehicle impact where traffic barriers are provided to protect MSE walls. The design and stability is performed in accordance with *AASHTO LRFD* and design guidance discussed in 14.4.

14.6.3.2 Design Responsibilities

MSE walls are proprietary wall systems and the structural design of the wall system is provided by the contractor. The structural design of the MSE wall system must include an analysis of internal stability (soil reinforcement pullout and stress) and local stability (facing connection forces and internal panel stresses). Additionally, the contractor should also provide internal drainage. Design drawings and calculations must be submitted to the Bureau of Structures for acceptance.

External stability, overall stability and settlement calculations are the responsibility of the WISDOT/Consultant designer. Compound stability is the responsibility of the Contractor. Soil borings and soil design parameters are provided by Geotechnical Engineer.

Although abutment loads can be supported on spread footings within the reinforced soil zone, it is WisDOT policy to support the abutment loads for multiple span structures on piles or shafts that pass through the reinforced soil zone to the in-situ soil below. Piles shall be driven prior to the placement of the reinforced earth. Strip type reinforcement can be skewed around the piles but must be connected to the wall panels and must extend to the rear of the reinforced soil zone.

For continuous welded wire fabric reinforcement, the contractor should provide details on the plans showing how to place the reinforcement around piles or any other obstacle. Abutments for single span structures may be supported by spread footings placed within the soil reinforcing zone, with WISDOT's approval. Loads from such footings must be considered for both internal wall design and external stability considerations.

14.6.3.3 Design Steps

Design steps specific to MSE walls are described in FHWA publication No*. FHWA-NHI-10-24* and modified shown below:

1. Establish project requirements including all geometry, loading conditions (transient and/or permanent), performance criteria, and construction constraints.
2. Evaluate existing topography, site subsurface conditions, in-situ soil/rock properties, and wall backfill parameters.
3. Select MSE wall using project requirement per step 1 and wall selection criteria discussed in 14.3.1.
4. Based on initial wall geometry, estimate wall embedment depth and length of reinforcement.
5. Estimate unfactored loads including earth pressure for traffic surcharge or sloping back slope and /or front slope.
6. Summarize load factors, load combinations, and resistance factors
7. Calculate factored loads for all appropriate limit states and evaluate (external stability) at Strength I Limit State
    a. sliding
    b. eccentricity
    c. bearing
8. Compute settlement at Service limit states
9. Compute overall stability at Service limit states
10. Compute vertical and lateral movement
11. Design wall surface drainage systems
12. Compute internal stability
    a. Select reinforcement
    b. Estimate critical failure surface
    c. Define unfactored loads
    d. Calculate factored horizontal stress and maximum tension at each reinforcement level
    e. Calculate factored tensile stress in each reinforcement
    f. Check factored reinforcement pullout resistance
    g. Check connection resistance requirements at facing
13. Design facing element
14. Design subsurface drainage

Steps 1-11 are completed by the designer and steps 12-14 are completed by the contractor after letting.

14.6.3.4 Initial Geometry

Figure 14.6-1 provides MSE wall elements and dimensions that should be established before making stability computations for the design of an MSE wall. The height (H) of an MSE wall is measured vertically from the top of the MSE wall to the top of the leveling pad. The length of reinforcement (L) is measured from the back of MSE wall panels. Alternately, the length of reinforcement (L1) is measured from the front face for modular block type MSE walls.

The MSE walls, with panel type facings, generally do not exceed heights of 35 feet, and with modular block type facings, should not exceed heights of 22 feet. Wall heights in excess of these limits will require approval on a case by case basis from WisDOT.

In general, a minimum reinforcement length of 0.7H or 8 feet whichever is greater shall be provided. MSE wall structures with sloping surcharge fills or other concentrated loads will generally require longer reinforcement lengths of 0.8H to 1.1H. As an exception, a minimum reinforcement length of 6.0 feet or 0.7H may be provided in accordance with **LRFD [C11.10.6.2.1]** provided all conditions for external and internal stability are met and smaller compaction equipment is used on a case by case basis as approved by WisDOT. MSE walls may be built to heights mentioned above; however, the external stability requirements may limit MSE wall height due to bearing capacity, settlement, or stability problems.

14.6.3.4.1 Wall Embedment

The minimum wall embedment depth to the bottom of the MSE wall reinforced backfill zone (top of the leveling pad shown in **LRFD [Figure 11.10.2-1]** and Figure 14.6-1 shall be based on external stability analysis (sliding, bearing resistance, overturning, and settlement) and the global (overall) stability requirements.

Minimum MSE wall leveling pad (and front face) embedment depths below lowest adjacent grade in front of the wall shall be in accordance with **LRFD [11.10.2.2]**, including the minimum embedment depths indicated in **LRFD [Table C11.10.2.2-1]** or 1.5 ft. whichever is greater. The embedment depth of MSE walls along streams and rivers shall be at least 2.0 ft below the potential scour elevation in accordance with **LRFD [11.10.2.2]** and the *Bridge Manual*.

WisDOT policy item:

The minimum depth of embedment of MSE walls shall be 1.5 feet

14.6.3.4.2 Wall Backslopes and Foreslopes

The wall backslopes and foreslopes shall be designed in accordance with 14.4.5.4.4. A minimum horizontal bench width of 4 ft (measured from bottom of wall horizontally to the slope

face) shall be provided, whenever possible, in front of walls founded on slopes. This minimum bench width is required to protect against local instability near the toe of the wall.

14.6.3.5 External Stability

The external stability of the MSE walls shall be evaluated for sliding, limiting eccentricity, and bearing resistance at the Strength I limit state. The settlement shall be calculated at Service I limit state.

Unfactored loads and factored load shall be developed in accordance with 14.6.3.5.1. It is assumed that the reinforced mass zone acts as a rigid body and that wall facing, the reinforced soil and reinforcement act as a rigid body.

For adequate stability, the goal is to have the factored resistance greater than the factored loads. According to publication FHWA-NHI-10-024, a capacity to demand ratio (CDR) can be used to quantify the factored resistance and factored load. CDR has been used to express the safety of the wall against sliding, limiting eccentricity, and bearing resistance.

14.6.3.5.1 Unfactored and Factored Loads

Unfactored loads and moments are computed based on initial wall geometry and using procedures defined in 14.4.5.4.5. The loading diagrams for one of the 3 possible earth pressure conditions are developed. These include 1) horizontal backslope with traffic surcharge shown in Figure 14.4-2; 2) sloping backslope shown in Figure 14.4-3; and, 3) broken backslope condition as shown in Figure 14.4-4.

The computed nominal loads discussed in 14.5.4 are multiplied by applicable load factors given in Table 14.4-1. A summary of load factors and load combinations as applicable for typical MSE wall stability check is presented in Table 14.6-4. Computed factored load and moments are used for performing stability checks.

14.6.3.5.2 Sliding Stability

The stability should be computed in accordance with **LRFD [11.10.5.3]** and **LRFD [10.6.3.4]**. The sliding stability analysis shall also determine the minimum resistance along the following potential surfaces in the zones shown in **LRFD [Figure 11.10.2.1]**.

- Sliding within the reinforced backfill (performed by contractor)
- Sliding along the reinforced back-fill/base soil interface (performed by designer)

The coefficient of friction angle shall be determined as:

- For discontinuous reinforcements, such as strips – the lesser of friction angle of either reinforced backfill, ϕ_r, the foundation soil, ϕ_{fd}.
- For continuous reinforcements, such as grids and sheets – the lesser of ϕ_r or ϕ_{fd} and ρ.

No passive soil pressure is allowed to resist sliding. The component of the passive resistance shall be ignored due to the possibility that permanent or temporary excavations in front of the wall could occur during the service life of the structure and lead to partial or complete loss of passive resistance. The shear strength of the facing system is also ignored.

For adequate stability, the factored resistance should be greater than the factored load for sliding,

The following equation shall be used for computing sliding:

$R_\tau = \phi R_n = \phi_\tau*(V)*(\tan\delta)$

Where:

R_R	=	Factored resistance against failure by sliding
R_n	=	Nominal sliding resistance against failure by sliding
R_τ	=	Nominal sliding resistance between soil and foundation
ϕ_τ	=	Resistance factor for shear between the soil and foundation per **LRFD [Table 11.5.6.1]**; 1.0
V	=	Factored vertical dead load
δ	=	Friction angle between foundation and soil
ρ	=	Maximum soil reinforcement interface angle **LRFD [11.11.5.3]**
$\tan\delta$	=	$\tan \phi_{fd}$ where ϕ is lesser of (ϕ_τ , ϕ_{fd} , ρ)
H_{tot}	=	Factored total horizontal load for Strength Ia
CDR	=	$R_\tau/H_{tot} \geq 1$

14.6.3.5.3 Eccentricity Check

The eccentricity check is performed in accordance with **LRFD [11.6.3.3]** and using procedure given in publication, *FHWA-NHI-10-025*

The eccentricity is computed using:

$e = B/2 - X_0$

Where:

$$X_0 = \frac{\sum M_V - M_H}{\Sigma V}$$

Where:

ΣM_V = Summation of Resisting moment due to vertical earth pressure

ΣM_H = Summation of Moments due to Horizontal Loads

ΣV = Summation of Vertical Loads

For eccentricity to be considered acceptable, the calculated location of the resultant vertical force (based on factored loads) should be within the middle two-thirds of the base width for soil foundations (i.e., e_{max} = B/3) and middle nine-tenths of the base width for rock foundations (i.e., e_{max} = 0.45B). Therefore, for each load group, e must be less than e_{max}. If e is greater than e_{max}, a longer length of reinforcement is required. The CDR for eccentricity should be greater than 1.

$CDR = e_{max}/e > 1$

14.6.3.5.4 Bearing Resistance

The bearing resistance check shall be performed in accordance with **LRFD [11.10.5.4]**. Provisions of **LRFD [10.6.3.1]** and **LRFD [10.6.3.2]** shall apply**.** Because of the flexibility of MSE walls, an equivalent uniform base pressure shall be assumed. Effect of live load surcharge shall be added, where applicable, because it increases the load on the foundation. Vertical stress, σ_v, shall be computed using following equation.

The bearing resistance computation requires:

Base Pressure $(\sigma_v) = \dfrac{\sum V}{B - 2e}$

σ_v = Vertical pressure

ΣV = Sum of all vertical forces

B = Reinforcement length

e = Eccentricity = $B/2 - X_0$

X_0 = $(\Sigma M_R - \Sigma M_H)/\Sigma V$

ΣM_V = Total resisting moments

ΣM_H = Total driving moments

The nominal bearing resistance, q_n, shall be computed using methods for spread footings. The appropriate value for the resistance factor shall be selected from **LRFD [Table 11.5.7-1]**.

The computed vertical stress, σ_v, shall be compared with factored bearing resistance, q_r in accordance with the **LRFD [11.10.5.4]** and a Capacity Demand Ratio, CDR, shall be calculated using the following equation:

$$q_r = \phi_b \, q_n \geq \sigma_v$$

Where:

q_r	=	Factored bearing resistance
q_n	=	Nominal bearing resistance computed using **LRFD [10.6.3.1.2a-1]**
ϕ_b	=	0.65 using **LRFD [Table 11.5.7-1]**
CDR	=	$q_r/\sigma_v > 1.0$

14.6.3.6 Vertical and Lateral Movement

Excessive MSE wall foundation settlement can result in damage to the wall facing, coping, traffic barrier, bridge superstructure, bridge end panel, pavement, and/or other settlement-sensitive elements supported on or near the wall.

Techniques to reduce damage from post-construction settlements and deformations may include full-height vertical sliding joints through the rigid wall facing elements and appurtenances, and/or ground improvement or reinforcement techniques. Staged preload/surcharge construction using onsite materials or imported fills may also be used.

Settlement shall be computed using the procedures outlined in 14.4.7.2 and the allowable limit settlement guidelines in 14.4.7.2.1 and in accordance with **LRFD [11.10.4]** and **LRFD [10.6.2.4].** Differential settlement from the front face to the back of the wall shall be evaluated, as appropriate.

For MSE walls with rigid facing concrete panels, slip joints of 0.75 inch width can be provided to control differential settlement as per **LRFD [Table C11.104.4-1]**.

14.6.3.7 Overall Stability

Overall Stability shall be performed in accordance with **LRFD [11.10.4.3]**. Provision of **LRFD [11.6.2.3]** shall also apply. Overall and compound stability of complex MSE wall system shall also be investigated, especially where the wall is located on sloping or soft ground where overall stability may be inadequate. Compound external stability is the responsibility of the contractor/wall supplier. The long term strength of each backfill reinforcement layer intersected by the failure surface should be considered as restoring forces in the limit equilibrium slope stability analysis. Figure 14.6-4 shows failure surfaces generated during overall or compound stability evaluation.

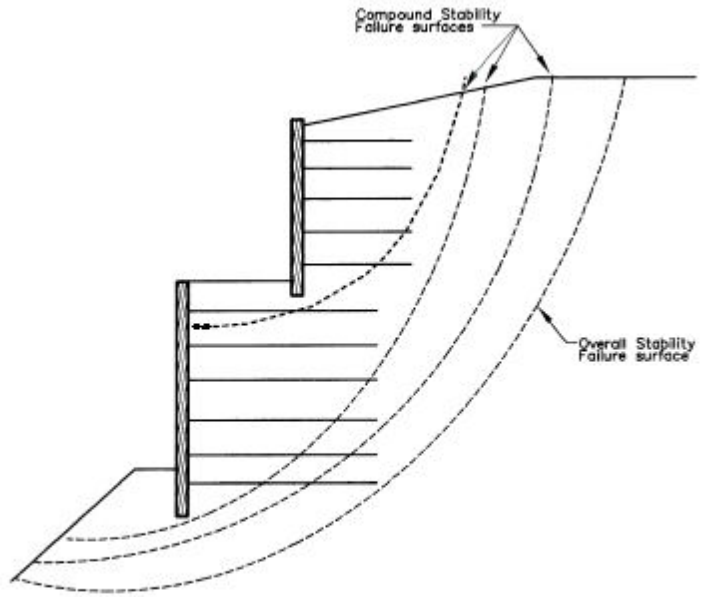

Figure 11.10.4.3-1 Overall and Compound Stability of Complex MSE Wall Systems.

Figure 14.6-4
MSE Walls Overall and Compound Stability
(Source *AASHTO LRFD*)

14.6.3.8 Internal Stability

Internal stability of MSE walls shall be performed by the wall contractor/supplier. The internal stability (safety against structural failure) shall be performed in accordance with **LRFD [11.10.6]** and shall be evaluated with respect to following at the Strength Limit:

- Tensile resistance of reinforcement to prevent breakage of reinforcement
- Pullout resistance of reinforcement to prevent failure by pullout
- Structural resistance of face elements and face elements connections

14.6.3.8.1 Loading

Figure 14.4-11 shows internal failure mechanism of MSE walls due to tensile and pullout failure of the soil reinforcement. The maximum factored tension load (T_{max}) due to tensile and pullout reinforcement shall be computed at each reinforcement level using the *Simplified Method* approach in accordance with **LRFD [11.10.6.2]**. Factored load applied to the reinforcement-facing connection (T_0) shall be equal to maximum factored tension reinforcement load (T_{max}) in accordance with **LRFD [11.10.6.2.2].**

14.6.3.8.2 Reinforcement Selection Criteria

At each reinforcement level, the reinforcement must be sized and spaced to preclude rupture under the stress it is required to carry and to prevent pullout for the soil mass. The process of sizing and designing the reinforcement consists of determining the maximum developed tension loads, their location, along a locus of maximum stress and the resistance provided by reinforcement in pullout capacity and tensile strength.

Soil reinforcements are either extensible or inextensible as discussed in 14.6.2.2.

When inextensible reinforcements are used, the soil deforms more than the reinforcement. The critical failure surface for this reinforcement type is determined by dividing the zone into active and resistant zones with a bilinear failure surface as shown in part (a) of Figure 14.6-5**.**

When extensible reinforcements are used, the reinforcement deforms more than soil and it is assumed that shear strength is fully mobilized and active earth pressure developed. The critical failure surface for both horizontal and sloping backfill conditions are represented as shown in lower part (b) of Figure 14.6-5**.**

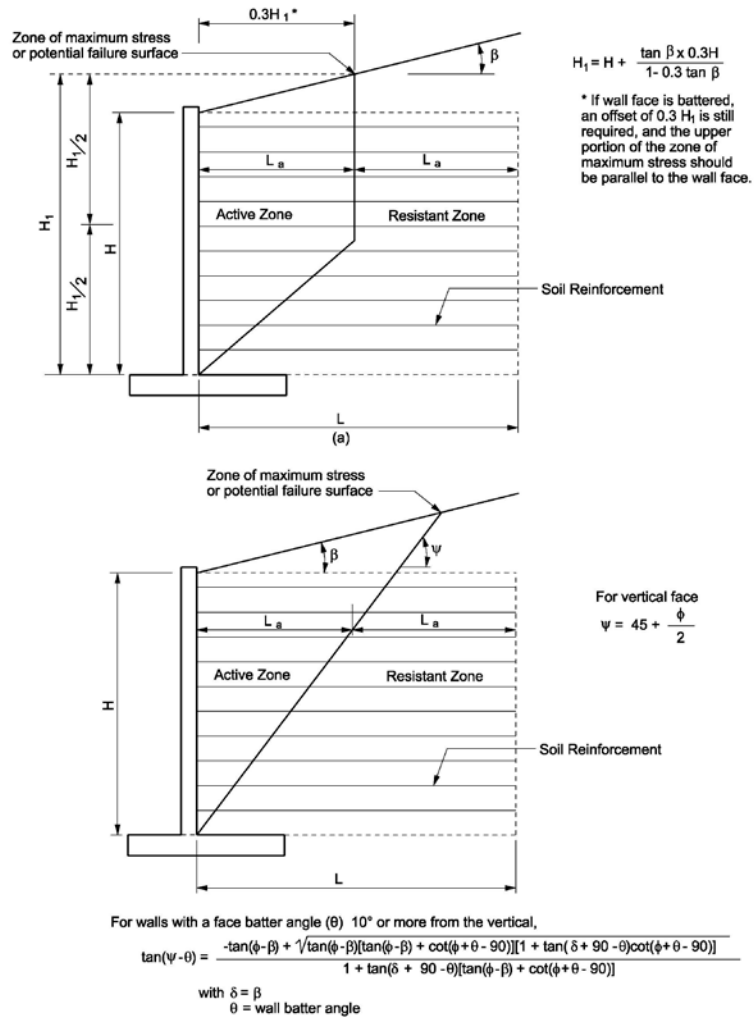

Figure 14.6-5
Location of Potential Failure Surface for Internal Stability of MSE Walls
(Source *AASHTO LRFD*)

14.6.3.8.3 Factored Horizontal Stress

The *Simplified Method* is used to compute maximum horizontal stress and is computed using the equation

$$\sigma_H = \gamma_P \left(\sigma_v k_r + \Delta\sigma_H\right)$$

Where:

γ_P = Maximum load factor for vertical stress (EV)

k_r = Lateral earth pressure coefficient computed using k_r/k_a

σ_V = Pressure due to reinforce soil mass and any surcharge loads above it

$\Delta\sigma_H$ = Horizontal stress at reinforcement level resulting in a concentrated horizontal surcharge load

Research studies have indicated that the maximum tensile force is primarily related to the type of reinforcement in the MSE mass, which, in turn, is a function of the modulus extensibility, and density of reinforcement. Based on this research, a relationship between the type of reinforcement and the overburden stress has been developed and is shown in Figure 14.6-6.

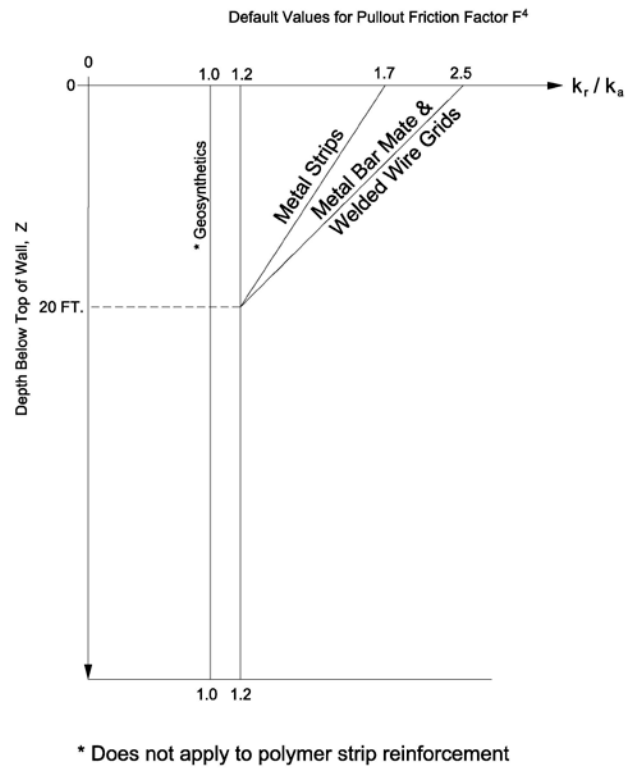

Figure 14.6-6
Variation of the Coefficient of Lateral Stress Ratio with Depth
(Source *AASHTO LRFD*)

Lateral stress ratio k_r/k_a, can be used to compute k_r at each reinforcement level. For vertical face batter <10^0, K_a is obtained using Rankine theory. For wall face with batter greater than 10^0 degrees, Coulomb's formula is used. If present, surcharge load should be added into the estimation of σ_V. For the simplified method, vertical stress for the maximum reinforcement load calculations are shown in Figure 14.6-7 .

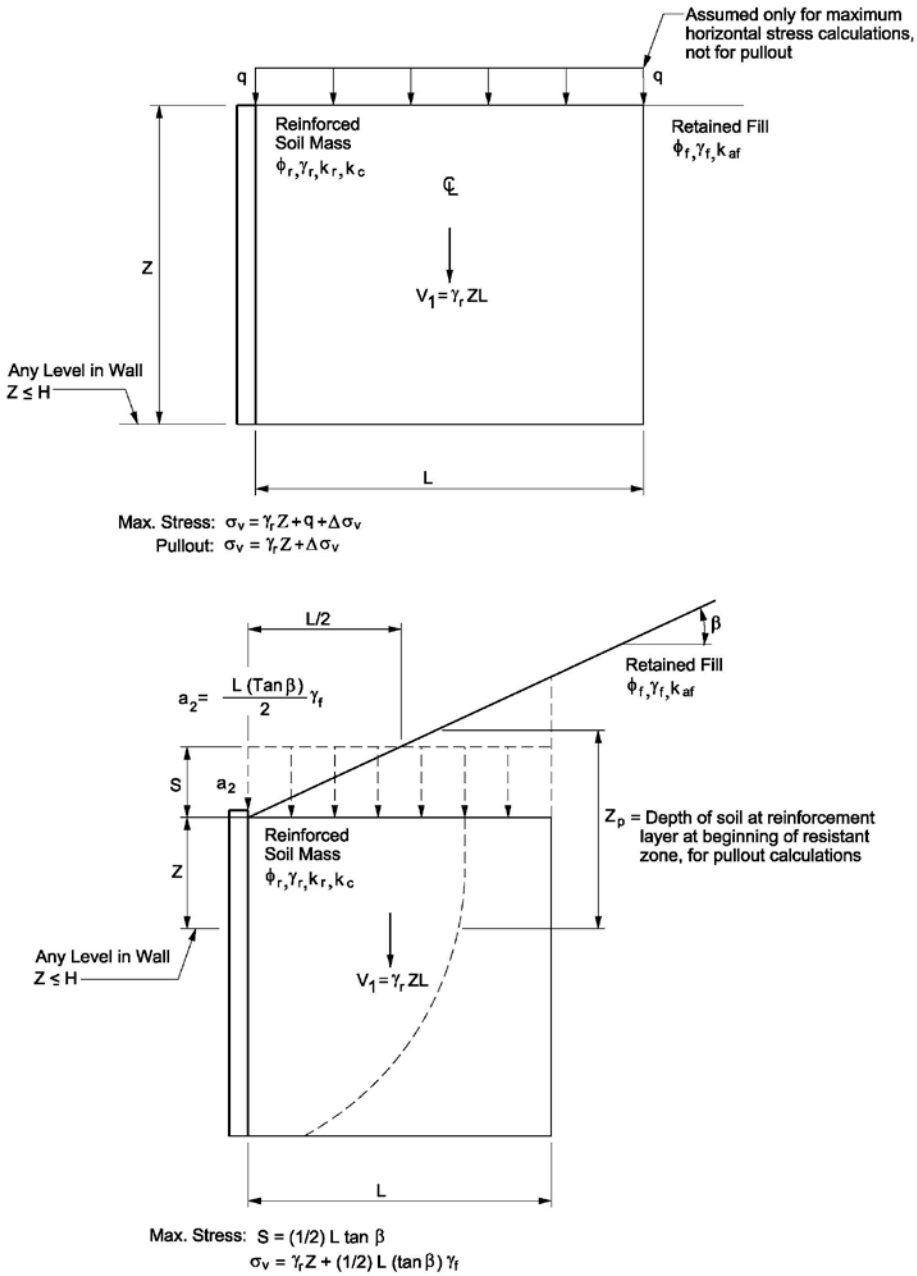

Figure 14.6-7

Calculation of Vertical Stress for Horizontal and Sloping Backslope for Internal Stability (Source *AASHTO LRFD*)

14.6.3.8.4 Maximum Factored Tension Force

The maximum tension load also referred as maximum factored tension force is applied to the reinforcements layer per unit width of wall (T_{max}) will be based on the reinforcement vertical spacing (S_V) as under:

$$T_{max} = \sigma_H S_V$$

Where:

T_{max}	=	Maximum tension load
σ_H	=	Factored horizontal load defined in 14.6.3.8.3

$T_{max\text{-}UWR}$ may also be computed at each level for discrete reinforcements (metal strips, bar mats, grids, etc) per a defined unit width of reinforcement

$T_{max\text{-}UWR}$	=	$(\sigma_H S_V)/R_C$
R_C	=	Reinforcement coverage ratio **LRFD [11.10.6.4.1]**

14.6.3.8.5 Reinforcement Pullout Resistance

MSE wall reinforcement pullout capacity is calculated in accordance with **LRFD [11.10.6.3]**. The potential failure surface for inextensible and extensible wall system and the active and resistant zones are shown in Figure 14.6-5. The pullout resistance length, L_e, shall be determined using the following equation

$$\phi L_e = \frac{T_{max}}{\left(F^* \cdot \alpha \cdot \sigma'_v \cdot C \cdot R_c\right)}$$

Where:

L_e	=	Length of reinforcement in the resistance zone
T_{max}	=	Maximum tension load
ϕ	=	Resistance factor for reinforcement pullout
F*	=	Pullout friction factor, Figure 14.6-8
α	=	Scale correction factor
σ'_V	=	Unfactored effective vertical stress at the reinforcement level in the resistance zone
C	=	2 for strip, grid, and sheet type reinforcement

R_c = Reinforcement coverage ratio **LRFD [11.10.6.4.3.2.1]**

The correction factor, α, depends primarily upon the strain softening of compacted granular material , and the extensibility, and the length of the reinforcement. Typical value is given in Table 14.6-2.

Reinforcement Type	**α**
All steel reinforcement	1.0
Geogrids	0.8
Geotextiles	0.6

Table 14.6-2
Typical values of α
(Source **LRFD [Table 11.10.6.3.2-1]**)

The pullout friction factor, F*, can be obtained accurately from laboratory pullout tests performed with specific material to be used on the project. Alternating, lower bound default values can be used from the laboratory or field pull out test performed in the specific back fill to be used on the project.

As shown in Figure 14.6-5, the total length of reinforcement (L) required for the internal stability is computed as below

$$L = L_e + L_a$$

Where:

L_e = Length of reinforcement in the resistance zone

L_a = Remainder length of reinforcement

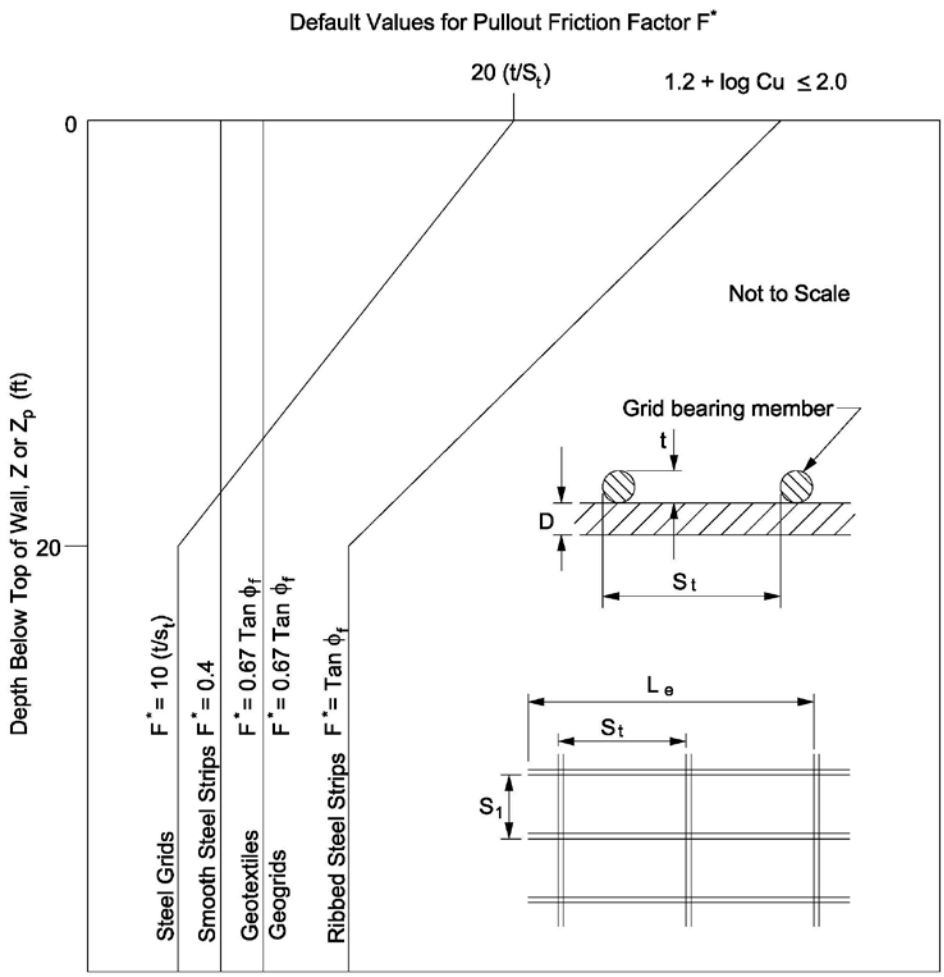

Figure 14.6-8
Typical Values of F*
(Source: **LRFD Figure [11.10.6.3.2-1]**)

14.6.3.8.6 Reinforced Design Strength

The maximum factored tensile stress (T_{MAX}) in each reinforcement layer as determined in 14.6.3.8.4 is compared to the long term reinforcement design strength computed in accordance with **LRFD [11.10.6.4.1]** as:

$$T_{MAX} \leq \phi T_{al} R_C$$

Where

ϕ = Resistance factor for tensile resistance

R_c = Reinforcement coverage ratio

T_{al} = Nominal tensile resistance (reinforcement design strength) at each reinforcement level

The value for T_{MAX} is calculated with a load factor of 1.35 for vertical earth pressure, EV. The tensile resistance factor for metallic and geosynthetic reinforcement is based on the following:

Metallic Reinforcement	Strip Reinforcement • Static Loading Grid Reinforcement • Static Loading	 0.75 0.65
Geosynthetic reinforcement	• Static Loading	0.90

Table 14.6-3
Resistance Factor for Tensile and Pullout Resistance
(Source **LRFD [Table 11.5.7.1]**)

14.6.3.8.7 Calculate T_{al} for Inextensible Reinforcements

T_{al} for inextensible reinforcements is computed as below:

$T_{al} = (A_c F_y)/b$

Where:

F_y = Minimum yield strength of steel

b = Unit width of sheet grid, bar, or mat

A_c = Design cross sectional area corrected for corrosion loss

14.6.3.8.8 Calculate T_{al} for Extensible Reinforcements

The available long-term strength, T_{al}, for extensible reinforcements is computed as:

$$T_{al} = \frac{T_{ult}}{RF} = \frac{Tult}{RF_{ID} * RF_{CR} * RF_D}$$

Where:

T_{ult} = Minimum average roll value ultimate tensile strength

RF = Combined strength reduction factor to account for potential long term degradation due to installation, damage, creep, and chemical aging

RF_{ID} = Strength Reduction Factor related to installation damage

RF_{CR} = Strength Reduction Factor caused by creep due to long term tensile load

RF_{D} = Strength Reduction Factor due to chemical and biological degradation

RF shall be determined from product specific results as specified in **LRFD [11.10.6.4.3b]**.

14.6.3.8.9 Design Life of Reinforcements

Long term durability of the steel and geosynthetic reinforcement shall be considered in MSE wall design to ensure suitable performance throughout the design life of the structure.

The steel reinforcement shall be designed to achieve a minimum designed life in accordance with **LRFD [11.5.1]** and shall follow the provision of **LRFD [7.6.4.2]**. The provision for corrosion loss shall be considered in accordance with the guidance presented in **LRFD [11.10.6.4.2a]**.

The durability of polymeric reinforcement is influenced by time, temperature, mechanical damage, stress levels, and changes in molecular structure. The strength reduction for geosynthetic reinforcement shall be considered in accordance with **LRFD [11.10.6.4.2b]**.

14.6.3.8.10 Reinforcement /Facing Connection Design Strength

Connections shall be designed to resist stresses resulting from active forces as well as from differential movement between the reinforced backfill and the wall facing elements in accordance with **LRFD [11.10.6.4.4]**.

<u>Steel Reinforcement</u>

Capacity of the connection shall be tested per **LRFD [5.11.3].** Elements of the connection which are embedded in facing elements shall be designed with adequate bond length and bearing area in the concrete, to resist the connection forces. The steel reinforcement connection strength requirement shall be designed in accordance with **LRFD [11.10.6.4.4a]**.

Connections between steel reinforcement and the wall facing units (e.g. bolts and pins) shall be designed in accordance with **LRFD [6.1.3]**. Connection material shall also be designed to accommodate loss due to corrosion.

<u>Geosynthetic Reinforcement</u>

The portion of the connection embedded in the concrete facing shall be designed in accordance with **LRFD [5.11.3]**. The nominal geosynthetic connection strength requirement shall be designed in accordance with **LRFD [11.10.6.4.4b]**.

14.6.3.8.11 Design of Facing Elements

Precast Concrete Panel facing elements are designed to resist the horizontal forces developed internally within the wall. Reinforcement is provided to resist the average loading conditions at each depth in accordance with structural design requirements in *AASHTO LRFD*. The embedment of the reinforcement to panel connector must be developed by test, to ensure that it can resist the maximum tension. The concrete panel must meet temperature and shrinkage steel requirements. Epoxy protection of panel reinforcement is required.

Modular Block Facing elements must be designed to have sufficient inter-unit shear capacity. The maximum spacing between unit reinforcement should be limited to twice the front block width or 2.7 feet, whichever is less. The maximum depth of facing below the bottom reinforcement layer should be limited to the block width of modular facing unit. The top row of reinforcement should be limited to 1.5 times the block width. The factored inter-unit shear capacity as obtained by testing at the appropriate normal load should exceed the factored horizontal earth pressure.

14.6.3.8.12 Corrosion

Corrosion protection is required for all permanent and temporary walls in aggressive environments as defined in **LRFD [11.10.2.3.3].** Aggressive environments in Wisconsin are typically associated with salt spray and areas near storm water pipes in urban areas. MSE walls with steel reinforcement should be protected with a properly designed impervious membrane layer below the pavement and above the first level of the backfill reinforcement. The details of the impervious layer drainage collector pipe can be found in *FHWA-NHI-0043* (FHWA 2001).

14.6.3.9 Wall Internal Drainage

The wall internal drainage should be designed using the guidelines provided in 14.4.7.6. Pipe underdrain must be provided to properly drain MSE walls. Chimney or blanket drains with collector-pipe drains are installed as part of the MSE walls sub-drainage system. Collector pipes with solid pipes are required to carry the discharge away from the wall. All collector pipes and solid pipes should be 6-inch diameter.

14.6.3.10 Traffic Barrier

Design concrete traffic barriers on MSE walls to distribute applied traffic loads in accordance with **LRFD [11.10.10.2]** and WisDOT standard details. Traffic impact loads shall not be transmitted to the MSE wall facing. Additionally, MSE walls shall be isolated from the traffic barrier load. Traffic barrier shall be self-supporting and not rely on the wall facing.

14.6.3.11 Design Example

Example E-2 shows a segmental precast panel MSE wall with steel reinforcement. Example E-3 shows a segmental precast panel MSE wall with geogrid reinforcement. Both design

examples include external and internal stability of the walls. The design examples are included in 14.18.

14.6.3.12 Summary of Design Requirements

1. Strength Limit Checks

   a. External Stability

      - Sliding

$$CDR = \left(\frac{R_\tau}{H_{tot}}\right) > 1.0$$

      - Eccentricity Check

$$CDR = \left(\frac{e_{\max}}{e}\right) > 1.0$$

      - Bearing Resistance

$$CDR = \left(\frac{q_r}{\sigma_v}\right) > 1.0$$

   b. Internal stability

      - Tensile Resistance of Reinforcement
      - Pullout Resistance of Reinforcement
      - Structural resistance of face elements and face elements connections

   c. Service Limit Checks

      - Overall Stability
      - Wall Settlement and Lateral Deformation

2. Concrete Panel Facings

   - f'_c = 4000 psi (wet cast concrete)
   - Min. thickness = 5.5 inches
   - Min. reinforcement = 1/8 square inch per foot in each direction (uncoated)

- Min. concrete cover = 1.5 inches
- fy = 60,000 psi

3. Traffic/ Surcharge
   - Traffic live load surcharge = 240 lb/ft^2 or
   - Non traffic live load surcharge =100 lb/ft^2
4. Reinforced Earthfill
   - Unit weight = 120 lb/ft^3
   - Angle of internal friction = 30^0, or as determined from Geotechnical analyses (maximum allowed is 36^0)
5. Retained Soil
   - Unit weight = 120 lb/ft^3
   - Angle of internal friction = 30^0, or as determined from Geotechnical analyses
6. Design Life
   - 75 year minimum for permanent walls
7. Soil Pressure Theory
   - Coulomb's Theory
8. Soil Reinforcement

   For steel or geogrid systems, the minimum soil reinforcement length shall be 70 percent of the wall height and not less than 8 feet. The length of soil reinforcement shall be equal from top to bottom. Soil reinforcement must extend a minimum of 3 feet beyond the failure plane.

9. Summary of Load Combinations and Load Factors

Group	γ_{DC}	γ_{EV}	γ_{LSv}	γ_{LSh}	γ_{EH}	γ_{CT}	Probable use
Strength Ia	0.90	1.00	0.0	1.75	1.50		Sliding, eccentricity
Strength Ib	1.25	1.35	1.75	1.75	1.50		Bearing, Wall strength
Extreme IIa	0.90	1.00	-	-	1.00	1.00	Sliding, eccentricity
Extreme IIb	1.25	1.35	-	-	1.00-	1.00	Bearing
Service I	1.00	1.00	1.00	1.00	1.00	-	Global, settlement, wall crack control

Table 14.6-4
Load Factor Summary for MSE-External Stability
(Source **LRFD [Table 3.4.1]**)

10. Resistance Factors for External Stability

Stability mode	Condition	Resistance Factor
Sliding		1.00
Bearing		0.65
Overall stability	Geotechnical parameters are well defined and slope does not support a structural element	0.75
	Geotechnical parameters are based on limited information, or the slope supports a structural element	0.65

Table 14.6-5
Resistance Factor Summary for MSE-External Stability
(Source **LRFD [Table 11.5.6.1]**)

14.7 Modular Block Gravity Walls

The proprietary modular blocks used in combination with soil reinforcement "Mechanically Stabilized Earth Retaining Walls with Modular Block Facings" can also be used as pure gravity walls (no soil reinforcement). These walls consist of a single row of dry stacked blocks (without mortar) to resist external pressures. These walls can be formed to a tight radius of curvature of 50 ft. or greater. A drawback is that these walls are settlement sensitive. This wall type should only be considered when adequate provisions are taken to keep the surface water runoff and the ground water seepage away from the wall face.

The material specifications for the blocks used for gravity walls are identical to those for the blocks used for block MSE walls as discussed in 14.6.2.3. The modular block gravity walls are proprietary. The wall supplier is responsible for the design of these walls. Design drawings and calculations must be submitted to WisDOT for approval.

The height to which they can be constructed, is a function of the depth of the blocks, the setback of the blocks, the front slope and backslope angle, the surcharge on the retained soil and the angles of internal friction of the retained soil behind the wall. Walls of this type are limited to a height from top of leveling pad to top of wall of 8 feet or less, and are limited to a maximum differential settlement of 1/200.

Footings for modular block gravity walls are either base aggregate dense 1-¼ inch (Section 305 of the *Standard Specifications)* or Grade A concrete. Minimum footing thickness is 12 inches for aggregate and 6 inches for concrete. The width of the footing equals the width of the bottom block plus 12 inches for aggregate footings and plus 6 inches for concrete footings. The bottom modular block is central on the leveling pad. The standard special provisions for Modular Block Gravity Walls require a concrete footing if any portion of a wall is over 5 feet measured from the top of the footing to the bottom of the wall cap.

The coarse aggregate No. 1 (501.2.5.4 of the *Standard Specifications*), is placed within 1 foot behind the back face of the wall, extending down to the bottom of the footing.

14.7.1 Design Procedure for Modular Block Gravity Walls

All modular block gravity walls shall be designed to resist external pressure caused by the supported earth, surcharge loads, and water in accordance with the design criteria discussed in **LRFD [11.11.4]** and 14.4. The design requires an external stability evaluation including sliding, eccentricity check, and bearing resistance check at the Strength I limit state and the evaluation of wall settlement and overall stability at the Service I limit state.

The design of modular block gravity walls provided by the contractor must be in compliance with the WisDOT special provisions for the project and the policy and procedures as stated in 14.15.2 and 14.16. The design must include an analysis of external stability including sliding, eccentricity, and bearing stress check. Horizontal shear capacity between blocks must also be verified by the contractor.

Settlement and overall stability calculations are the responsibility of the designer. The soil design parameters and allowable bearing capacity for the design are provided by the Geotechnical Engineer, including the minimum required block depth.

14.7.1.1 Initial Sizing and Wall Embedment

The minimum embedment to the top of the footing for modular block gravity walls is the same as stated in **LRFD [11.10.2.2]** for mechanically stabilized earth walls. Wall backfill slope shall not be steeper than 2:1. Where practical, a minimum 4.0 ft wide horizontal bench shall be provided in front of the walls.

Wall embedment for prefabricated modular walls shall meet the requirements discussed in section14.4.7.5. The minimum embedment shall be 1.5 ft. or the requirement of scouring or erosion due to flooding defined in 14.6.3.4.1.

14.7.1.2 External Stability

The external stability analyses shall develop the unfactored and factored loads and include evaluations for sliding, eccentricity check, and bearing resistance in accordance with **LRFD [11.11.4]. LRFD [11.11.4.1]** requires that wall stability be performed at every block level.

14.7.1.2.1 Unfactored and Factored Loads

Unfactored loads and moments shall be computed after establishing the initial wall geometry and using procedures defined in 14.4.5.4.5. A load diagram as shown in Figure 14.4-5 shall be developed. Factored loads and moments shall be computed as discussed in 14.4.6 by multiplying applicable load factors given in Table 14.4-1. A summary of load factors and load combinations as applicable for a typical modular block wall is presented in Table 14.7-1. Computed factored load and moments are used for performing stability checks.

14.7.1.2.2 Sliding Stability

Sliding should be considered for the full height wall and at each block level in the wall. The stability should be computed in accordance with **LRFD [10.6.3.4]**, using the following equation:

$$R_R = \phi R_n = \phi_\tau R_\tau$$

Where:

R_R	=	Factored resistance against failure by sliding
R_n	=	Nominal sliding resistance against failure by sliding
ϕ_τ	=	Resistance factor for shear between soil and foundation per **LRFD [Table 10.5.5.2.2.1]**
ϕ_τ	=	0.9 for concrete on sand and 1.0 for soil on soil
R_τ	=	Nominal sliding resistance between soil and foundation

No passive soil pressure is allowed to resist sliding. The component of the passive resistance shall be ignored due to the possibility that permanent or temporary excavations in front of the

wall could occur during the service life of the structure and lead to partial or complete loss of passive resistance.

Interface sliding resistance between concrete blocks shall be calculated using the corrected wall weight based on the calculated hinge height in accordance with **LRFD Figure [11.10.6.4.4b-1]**. Interface friction resistance parameters shall be based on NCMA method. Shear between the blocks must be resisted by friction, keys or pins.

14.7.1.2.3 Bearing Resistance

The bearing resistance of the walls shall be computed in accordance with **LRFD [10.6.3.1]**.

Base Pressure, $\sigma_v = \frac{\sum V_{tot}}{(B - 2e)}$

The computed vertical stress shall be compared with factored bearing resistance in accordance with the **LRFD [10.6.3.1]**, using following equation:

$q_r = \phi_b q_n \geq \sigma_v$

Where:

q_n	=	Nominal bearing resistance computed using **LRFD [10.6.3.1.2-a]**
$\sum V$	=	Summation of Vertical loads
B	=	Base width
e	=	Eccentricity
ϕ_b	=	0.55 **LRFD [Table 11.5.7-1]**

14.7.1.2.4 Eccentricity Check

The eccentricity check shall be performed in accordance with **LRFD [11.6.3.3].** The location of the resultant force should be within the middle two-thirds of the base width (e<B/3) for footings on soil, and within nine-tenths of the base (e<0.45B) for footings on rock.

14.7.1.3 Settlement

The vertical and lateral displacements of prefabricated modular retaining walls must be evaluated for all applicable dead and live load combinations at Service I limit states using procedures described in14.4.7.2 and compared with tolerable movement criteria presented in 14.4.7.2.1. In general, lateral movements of walls on shallow foundations can be estimated assuming the wall rotates or translates as a rigid body due to the effects of earth loads and differential settlements along the base of the wall.

14.7.1.4 Overall Stability

The overall (global) stability shall be evaluated in accordance with **LRFD [11.6.2.3]** and in accordance with 14.4.7.3, with the exception that the entire mass of the modular walls (or the "foundation load"), may be assumed to contribute to the overall stability of the slope. The overall stability check shall be performed by the Geotechnical Engineering Unit or Consultant of record.

14.7.1.5 Summary of Design Requirements

1. Stability Evaluations
   - External Stability
     - Eccentricity Check
     - Bearing Check
     - Sliding
   - Settlement
   - Overall/Global
2. Block Data
   - One piece block
   - Minimum thickness of front face = 4 inches
   - Minimum thickness of internal cavity walls other than front face = 2 inches
   - 28 day concrete strength = 5000 psi
   - Maximum water absorption rate by weight = 5%
3. Traffic Surcharge
   - Traffic live load surcharge = 240 lb/ft^2
   - If no traffic live load is present, use 100 lb/ft^2 live load for construction equipment
4. Retained Soil
   - Unit weight γ_f = 120 lb/ft^3
   - Angle of internal friction as determined by Geotechnical Engineer

5. Soil Pressure Theory

   - Use Coulomb Theory

6. Maximum Height = 8 ft.

   (This height is measured from top of leveling pad to bottom of cap. It is not the exposed height). In addition this maximum height may be reduced if there is sloping backfill or a sloping surface in front of the wall.)

7. Load Factors

Group	γ_{DC}	γ_{EV}	γ_{LSv}	γ_{LSh}	γ_{EH}	γ_{CT}	Probable use
Strength Ia	0.90	1.00	0.0	1.75	1.50		Sliding, eccentricity
Strength Ib	1.25	1.35	1.75	1.75	1.50		Bearing /wall strength
Service I	1.00	1.00	1.00	1.00	1.00		Global/settlement/wall crack control

Table 14.7-1
Load Factor Summary for Prefabricated Modular Walls

8. Sliding Resistance Factors

   ϕ_τ = 1.0 **LRFD [Table11.5.7-1]**

9. Bearing Resistance Factors

   ϕ_b = 0.55 **LRFD [Table11.5.7-1]**

14.8 Prefabricated Modular Walls

Prefabricated modular walls systems use interconnected structural elements, which use selected in-fill soil or rock fill to resist external pressures by acting as gravity retaining walls. Metal and precast concrete or metal bin walls, crib walls, and gabion walls are considered under the category of prefabricated modular walls. These walls consist of modular elements which are proprietary. The design of these wall systems is provided by the contractor/wall supplier.

Prefabricated modular walls can be used where reinforced concrete walls are considered. Steel modular systems should not be used where aggressive environmental condition including the use of deicing salts or other similar chemicals are used that may corrode steel members and shorten the life of modular wall systems.

14.8.1 Metal and Precast Bin Walls

Metal bin walls generally consist of sturdy, lightweight, modular steel members called as stringers and spacers. The stringers constitute the front and back face of the bin and spacers its sides. The wall is erected by bolting the steel members together. The flexibility of the steel structure allows the wall to flex against minor ground movement. Metal bin walls are subject to corrosion damage from exposure to water, seepage and deicing salts. To improve the service life of metal bin walls, consideration should be given towards increasing the galvanizing requirements and establishing electrochemical requirements for the confined backfill.

Precast concrete bin walls are typically rectangular interlocking prefabricated concrete modules. A common concrete module typically has a face height varying from 4 to 5 feet, a face length up to 8 feet, and a width ranging from 4 to 20 feet. The wall can be assembled vertically or provided with a batter. A variety of surface treatment can be provided to meet aesthetic requirements. A parapet wall can be provided at the top of the wall and held rigidly by a cast in place concrete slab. A reinforced cast-in-place or precast concrete footing is usually placed at the toe and heel of the wall.

Bin walls are not recommended for applications that require a radius of curvature less than 800 ft. The wall face batter shall not be steeper than 10° or 6:1 (V:H). The base width of bin walls is generally 60% of the wall height. Further description and method of construction can be found in FHWA's publication *Earth Retaining Structures* 2008.

14.8.2 Crib Walls

Crib walls are built using prefabricated units which are stacked and interlocked and filled with free draining material. Cribs consist of solid interlocking reinforced concrete members called rails and tiebacks (sometimes called stretchers and headers). The rails run parallel with the wall face at both the front and rear of the cribbing and the tiebacks run transverse to the rails to tie the structure together. Rails and cross sections of tiebacks form the front face of the wall.

The wall face can either be opened or closed. In closed faced cribs, stretchers are placed in contact with each other. In open face cribs, the stretchers are placed at an interval such that

the infill material does not escape through the face. The wall face batter for crib walls shall be no steeper than 4:1.

14.8.3 Gabion Walls

The gabion walls are composed of orthogonal wire cages or baskets tied together and filled with rock fragments. These wire baskets are also known as gabion baskets. The basket size can be varied to suit the terrain with a standard width of 3 feet to standard length varying 3 to 12 feet. The standard height of these baskets may vary from 1 foot to 3 feet. Individual wire baskets are filled with rock fragments ranging in size from 4 to 10 inches. After the baskets are filled, the lids are closed and wired shut to form a relatively rigid block. Succeeding rows of the gabions are laced in the field to the underlying gabions and are filled in the same manner until the wall reaches its design height. The rock filled baskets are closed with lids.

The durability of a gabion wall is dependent upon maintaining the integrity of the gabion baskets. Galvanized steel wire is required for all gabion installations. Although gabions are manufactured from a heavy gage wire, there is a potential for damage due to vandalism. While no known case of such vandalism has occurred on any existing WisDOT gabion walls, the potential for such action should be considered at specific sites.

A height of about 18 feet should be considered as a practical limit for gabion walls. Gabion walls have shown good economy for low to moderate heights but lose this economy as height increases. The front and rear face of the wall may be vertical or stepped. A batter is provided for walls exceeding heights of 10 feet, to improve stability. The wall face step shall not be steeper than 6” or 10:1(V:H). The minimum embedment for gabion walls is 1.5 feet. The ratio of the base width to height will normally range from 0.5 to 0.75 depending on backslope, surcharge and angle of internal friction of retained soil. Gabion walls should be designed in cross section with a horizontal base and a setback of 4 to 6 inches at each basket layer. This setback is an aid to construction and presents a more pleasing appearance. The use of a tipped wall base should not be allowed except in special circumstances.

14.8.4 Design Procedure

All prefabricated modular wall systems shall be designed to resist external pressure caused by the supported earth, surcharge loads, and water in accordance with design criteria discussed in **LRFD [11.11.4]** and 14.4 of this chapter. The design requires an external stability evaluation by the WISDOT/Consultant designer, including sliding, eccentricity, and bearing resistance check at the Strength I limit state and the evaluation of wall settlement and overall stability at the Service I limit state.

In addition, the structures modules of the bin and crib walls shall be designed to provide adequate resistance against structural failure as part of the internal stability evaluations in accordance with the guidelines presented in **LRFD [11.11.5]**.

No separate guidance is provided in the *AASHTO LRFD* for the gabion walls, therefore, gabion walls shall be evaluated for the external stability at Strength I and the settlement and overall stability checks at Service I using similar process as that of a prefabricated modular walls.

Since structure modules of the prefabricated modular walls are proprietary, the contractor/ supplier is responsible for the internal stability evaluation and the structural design of the structural modules. The design by contractor shall also meet the requirements for any special provisions. The external stability, overall stability check and the settlement evaluation will be performed by Geotechnical Engineer.

14.8.4.1 Initial Sizing and Wall Embedment

Wall backfill shall not be steeper than 2:1(V:H). Where practical, a minimum 4.0 feet wide horizontal bench shall be provided in front of the walls. A base width of 0.4 to 0.5 of the wall height can be considered initially for walls with no surcharge. For walls with surcharge loads or larger backslopes, an initial base width of 0.6 to 0.7 times can be considered.

Wall embedment for prefabricated modular walls shall meet the requirements discussed in 14.4.7.5. A minimum embedment shall be 1.5 ft or the requirement for scouring or erosion due to flooding.

14.8.5 Stability checks

Stability computations for crib, bin, and gabion modular wall systems shall be made by assuming that the wall modules and wall acts as a rigid body. Stability of gabion walls shall be performed assuming that gabions are flexible.

14.8.5.1 Unfactored and Factored Loads

All modular walls shall be investigated for lateral earth and water pressure including any live and/or dead load surcharge. Dead load due to self-weight and soil or rock in-fill shall also be included in computing the unfactored loads. Material properties for selected backfill, concrete, and steel shall be in accordance with guidelines suggested in 14.4.6. The properties of prefabricated modules shall be based on the type of wall modules being supplied by the wall suppliers.

The angle of friction δ between the back of the modules and backfill shall be used in accordance with the **LRFD [3.11.5.9]** and **LRFD [Table C3.11.5.9.1]**. Loading and earth pressure distribution diagram shall be developed as shown in Figure 14.4-6 or Figure 14.4-7

Since infill material and backfill materials of the gabion walls are well drained, no hydrostatic pressure is considered for the gabion walls. The unit weight of the rock-filled gabion baskets shall be computed in accordance with following:

$$\gamma_g = (1-\eta_r)G_s\gamma_w$$

Where:

η_r = Porosity of the rock fill

Gs = Specific gravity of the rock

γ_w = Unit weight of water

Free-draining granular material shall be used as backfill material behind the prefabricated modules in a zone of 1:1 from the heel of the wall. The soil design parameters shall be provided by the Geotechnical Engineer.

Factored loads and moments shall be computed as discussed in 14.4.5.5 and shall be multiplied by applicable load factors given in Table 14.4-1. A summary of load factors and load combinations as applicable for a typical modular block wall is presented in Table 14.8-1

14.8.5.2 External Stability

The external stability of the prefabricated modular walls shall be evaluated for sliding, eccentricity check, and bearing resistance in accordance with **LRFD [11.11.4].** It is assumed that the wall acts as a rigid body. **LRFD [11.11.4.1]** requires that wall stability be performed at every module level. The stability can be evaluated using procedure described in 14.7.1.2.

For prefabricated modular walls, the sliding analysis shall be performed by assuming that 80% of the weight of the soil in the modules is transferred to the footing supports with the remaining soil, weight being transferred to the area of the wall between footings.

The load resisting overturning shall also be limited to 80%, because the interior of soil can move with respect to the retaining module.

The bearing resistance shall be evaluated by assuming that 80% weight of the infill soil is transferred to point (or line) supports at the front or rear of the module.

14.8.5.3 Settlement

The vertical and lateral displacements of prefabricated modular retaining walls must be evaluated for all applicable dead and live load combinations at Service I using procedure described in 14.4.7.2 and compared with tolerable movement criteria presented in 14.4.7.2.1. In general, lateral movements of walls on shallow foundations can be estimated assuming the wall rotates or translates as a rigid body due to the effects of earth loads and differential settlements along the base of the wall.

14.8.5.4 Overall Stability

The overall (global) stability shall be evaluated in accordance with **LRFD [11.6.2.3]** and in accordance with 14.4.7.3 with the exception that the entire mass of the modular walls (or the "foundation load"), may be assumed to contribute to the overall stability of the slope. The overall stability check shall be performed by the Geotechnical Engineer.

14.8.5.5 Structural Resistance

Structural design of the modular units or members shall be performed in accordance with **LRFD [11.11.5]**. The design shall be performed using the factored loads developed for the geotechnical design (external stability) and for the factored pressures developed inside the modules in accordance with **LRFD [11.11.5.1]**. Design shall consider any potential failure mode, including tension, compression, shear, bending, and torsion. The contractor/wall supplier is responsible for the structural design of wall components.

14.8.6 Summary of Design Safety Factors and Requirements

Requirements

Stability Checks

- External Stability
  - Sliding
  - Overturning (eccentricity check)
  - Bearing Stress
- Internal Stability
  - Structural Components
- Settlement
- Overall Stability

Foundation Design Parameters

- Use values provided by Geotechnical Engineer

Concrete and steel Design Data

- f'_c = 4000 psi (or as required by design)
- f_y = 60,000 psi

Use uncoated bars or welded wire fabric

Traffic Surcharge

- Traffic live load surcharge = 240 lb/ft^2
- If no traffic live load is present, use 100 lb/ft^2 live load for construction equipment

Retained Soil

- Unit weight = 120 lb/ft^3
- Angle of internal friction =
  - Use value provided by Geotechnical Engineer
- Rock-infill unit weight =
  - Based on porosity and rock type

Soil Pressure Theory

- Coulomb's Theory for prefabricated wall systems
- Rankine theory or Coulomb theory, at the discretion of designer for gabion walls

7 Load Factors

Group	γ_{DC}	γ_{EV}	γ_{LSv}	γ_{LSh}	γ_{EH}	γ_{ES}	Probable use
Strength Ia	0.90	1.00	0.0	1.75	1.50	1.50	Sliding, eccentricity
Strength Ib	1.25	1.35	1.75	1.75	1.50	1.50	Bearing /wall strength
Service I	1.00	1.00	1.00	1.00	1.00		Global/settlement/wall crack control

Table 14.8-1
Load Factor Summary for Prefabricated Modular Walls

14.9 Soil Nail Walls

Soil nail walls consist of installing reinforcement of the ground behind an excavation face, by drilling and installing closely-spaced rows of grouted steel bars (i.e., soil nails). The soil nails are grouted in place and subsequently covered with a facing; used to stabilize the exposed excavation face, support the sub-drainage system (i.e., composite strip drain, collector and drainage pipes), and distribute the soil nail bearing plate load over a larger area. When used for permanent applications, a permanent facing layer, meeting the aesthetic and structural requirement is constructed directly over the temporary facing.

Soil nail walls are typically used to stabilize excavation during construction. Soil nail walls have been used recently with MSE walls to form hybrid wall systems typically known as 'shored walls'. The soil nails are installed as top down construction. Conventional soil nail wall systems are best suited for sites with dense to very dense, granular soil with some apparent cohesion (sands and gravels), stiff to hard, fine-grained soil (silts and clays) of relatively low plasticity (PI<15), or weak, weathered massive rock with no adversely-oriented planes of weakness. Soil nail wall construction requires that open excavations stand unsupported long enough to allow soil nail drilling and grouting, sub-drainage installation, reinforcement, and temporary shotcrete placement. Soil nail walls should not be used below groundwater.

14.9.1 Design Requirements

AASHTO LRFD currently does not include the design and construction of soil nail walls. It is recommended that soil nail walls be designed using methods recommended in *Geotechnical Engineering Circular (GEC) No. 7 – Soil Nail Walls* (FHWA, 2003). The design life of the soil nail walls shall be in accordance with 14.4.3.

The design of the soil nailing walls requires an evaluation of external, internal, and overall stability and facing-connection failure mode as presented in Sections 5.1 thru Sections 5.6 of *(GEC) No. 7 – Soil Nail Walls* (FHWA, 2003).

A permanent wall facing is required for all permanent soil nail walls. Permanent facing is commonly constructed of cast-in-place (CIP) concrete, welded wire mesh (WWM) reinforced concrete and precast fabricated panels. In addition to meeting the aesthetic requirements and providing adequate corrosion protections to the soil nails, design facings for all facing-connection failure modes indicated in FHWA 2003.

Corrosion protection is required for all permanent soil nail wall systems to assure adequate long-term wall durability. . The level of corrosion protection required should be determined on a project-specific basis based on factors such as wall design life, structure criticality and the electrochemical properties of the supporting soil and rock materials. Criteria for classification of the supporting soil and rock materials as "aggressive" or "non-aggressive" are provided in FHWA 2003.

Soil nails are field tested to verify that nail design loads can be supported without excessive movement and with an adequate margin of safety. Perform both verification and proof testing of designated test nails as recommended in FHWA 2003.

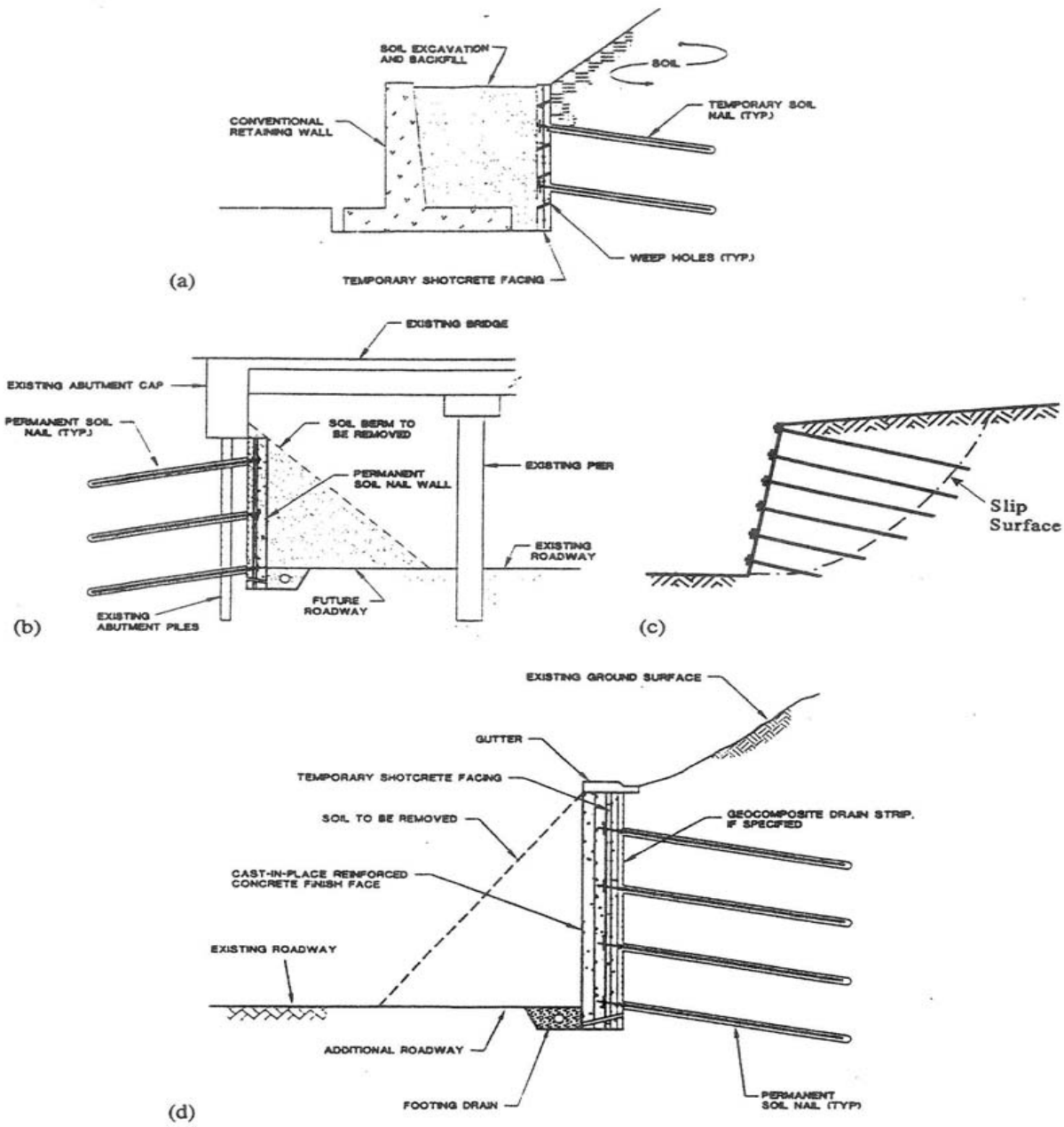

Figure 14.9-1
In-Situ Soil Nailed Walls
(Source: Earth Retaining Structures, 2008)

14.10 Steel Sheet Pile Walls

14.10.1 General

Steel sheet pile walls are a type of non-gravity wall and are typically used as temporary walls, but can also be used for permanent locations.

Sheet piling consists of interlocking steel, precast concrete or wood pile sections driven side by side to form a continuous unit. Steel is used almost exclusively for sheet pile walls. Individual pile sections usually vary from 12 to 21 inches in width, allowing for flexibility and ease of installation. The most common use of sheet piling is for temporary construction of cofferdams, retaining walls or trench shoring. The structural function of sheet piles is to resist lateral pressures due to earth and/or water. The steel manufacturers have excellent design references. Sheet pile walls generally derive their stability from sufficient pile penetration (cantilever walls). When sheet pile walls reach heights in excess of approximately 15 feet, the lateral forces are such that the walls need to be anchored with some form of tieback.

Cofferdams depend on pile penetration, ring action and the tensile strength of the interlocking piles for stability. If a sheet pile cofferdam is to be dewatered, the sheets must extend to a sufficient depth into firm material to prevent a "blow out", that is water coming in from below the base of the excavation. Cross and other bracing rings must be adequate and placed as quickly as excavation permits.

Sheet piling is generally chosen for its efficiency, versatility, and economy. Cofferdam sheet piling and any internal bracing are designed by the Contractor, with the design being accepted by the Department. Other forms of temporary sheet piling are designed by the Department. Temporary sheet piling is not the same as temporary shoring. Temporary shoring is designed by the Contractor and may involve sheet piling or other forms of excavation support.

14.10.2 Sheet Piling Materials

Although sheet piling can be composed of timber or precast concrete members, these material types are seldom, if ever, used on Wisconsin transportation projects.

Steel sheet piles are by far the most extensively used type of sheeting in temporary construction because of their availability, various sizes, versatility and ability to be reused. Also, they are very adaptable to permanent structures such as bulkheads, seawalls and wharves if properly protected from salt water.

Sheet pile shapes are generally Z, arched or straight webbed. The Z and the medium to high arched sections have high section moduli and can be used for substantial cantilever lengths or relatively high lateral pressures. The shallow arched and straight web sections have high interlocking strength and are employed for cellular cofferdams. The Z-section has a ball-and-socket interlock and the arched and straight webbed sections have a thumb-and-finger interlock capable of swinging 10 degrees. The thumb-and-finger interlock provides high tensile strength and considerable contact surface to prevent water passage. Continuous steel sheet piling is not completely waterproof, but does stop most water from passing through the joints. Steel sheet piling is usually 3/8 to 1/2 inch thick. Designers should specify the required

section modulus and embedment depths on the plans, based on bending requirements and also account for corrosion resistance as appropriate.

Refer to steel catalogs for typical sheet pile sections. Contractors are allowed to choose either hot or cold rolled steel sections meeting the specifications. Previously used steel sheet piling may be adequate for some temporary situations, but should not be allowed on permanent applications.

14.10.3 Driving of Sheet Piling

All sheets in a section are generally driven partially to depth before all are driven to the final required depths. There is a tendency for sheet piles to lean in the direction of driving producing a net "gain" over their nominal width. Most of this "gain" can be eliminated if the piles are driven a short distance at a time, say from 6 feet to one third of their length before any single pile is driven to its full length. During driving if some sheet piles strike an obstruction, move to the next pile that can be driven and then return to the piles that resisted driving. With interlock guides on both sides and a heavier hammer, it may be possible to drive the obstructed sheet to the desired depth.

Sheet piles are installed by driving with gravity, steam, air or diesel powered hammers, or by vibration, jacking or jetting depending on the subsurface conditions, and pile type. A vibratory or double acting hammer of moderate size is best for driving sheet piles. For final driving of long heavy piles a single acting hammer may be more effective. A rapid succession of blows is generally more effective when driving in sand and gravel; slower, heavier blows are better for penetrating clay materials. For efficiency and impact distribution, where possible, two sheets are driven together. If sheets adjacent to those being driven tend to move down below the required depth, they are stopped by welding or bolting to the guide wales. When sheet piles are pulled down deeper than necessary by the driving of adjacent piles, it is generally better to fill in with a short length at the top, rather than trying to pull the sheet back up to plan location.

14.10.4 Pulling of Sheet Piling

Vibratory hammers are most effective in removing sheets and typically used. Sheet piles are pulled with air or steam powered extractors or inverted double acting hammers rigged for this application. If piles are difficult to pull, slight driving is effective in breaking them loose. Pulled sheet piling is to be handled carefully since they may be used again; perhaps several times.

14.10.5 Design Procedure for Sheet Piling Walls

A description of sheet pile design is given in **LRFD [11.8.2]** as **"**Cantilevered Wall Design" along with the earth pressure diagrams showing some simplified earth pressures. They are also referred to as flexible cantilevered walls. Steel sheet pile walls can be designed as cantilevered walls up to approximately 15 feet in height. Over 15 feet height, steel sheet pile walls may require tie-backs with either prestressed soil anchors, screw anchors, or deadman-type anchors.

The preferred method of designing cantilever sheet piling is by the "Conventional Method" as described in the *United States Steel Sheet Piling Design Manual* (February,1974). The Geotechnical Engineer provides the soil design parameters including cohesion values, angles of internal friction, wall friction angles, soil densities, and water table elevations. The lateral earth pressures for non-gravity cantilevered walls are presented in **LRFD [3.11.5.6].**

Anchored wall design must be in accordance with **LRFD [11.5.6]**. Anchors for permanent walls shall be fully encapsulated over their entire length. The anchor hardware shall be designed to have a corrosion resistance durability to ensure a minimum design life of 75 years.

All areas of permanent exposed steel sheet piling above the ground line shall be coated or painted prior to driving. Corrosion potential should be considered in all steel sheet piling designs. Special consideration should be given to permanent steel sheet piling used in areas of northern Wisconsin which are inhabited by corrosion causing bacteria (see *Facilities Development Manual*, Procedure 13-1-15).

Permanent sheet pile walls below the watertable may require the use of composite strip drains, collector and drainage pipes before placement of the final concrete facing.

The appearance of permanent steel sheet piling walls may be enhanced by applying either precast concrete panels or cast-in-place concrete surfacing. Welded stud-shear connectors can be used to attach cast-in-place concrete to the sheet piling. Special surface finishes obtained by using form liners or other means and concrete stain or a combination of stain and paint can be used to enhance the concrete facing aesthetics.

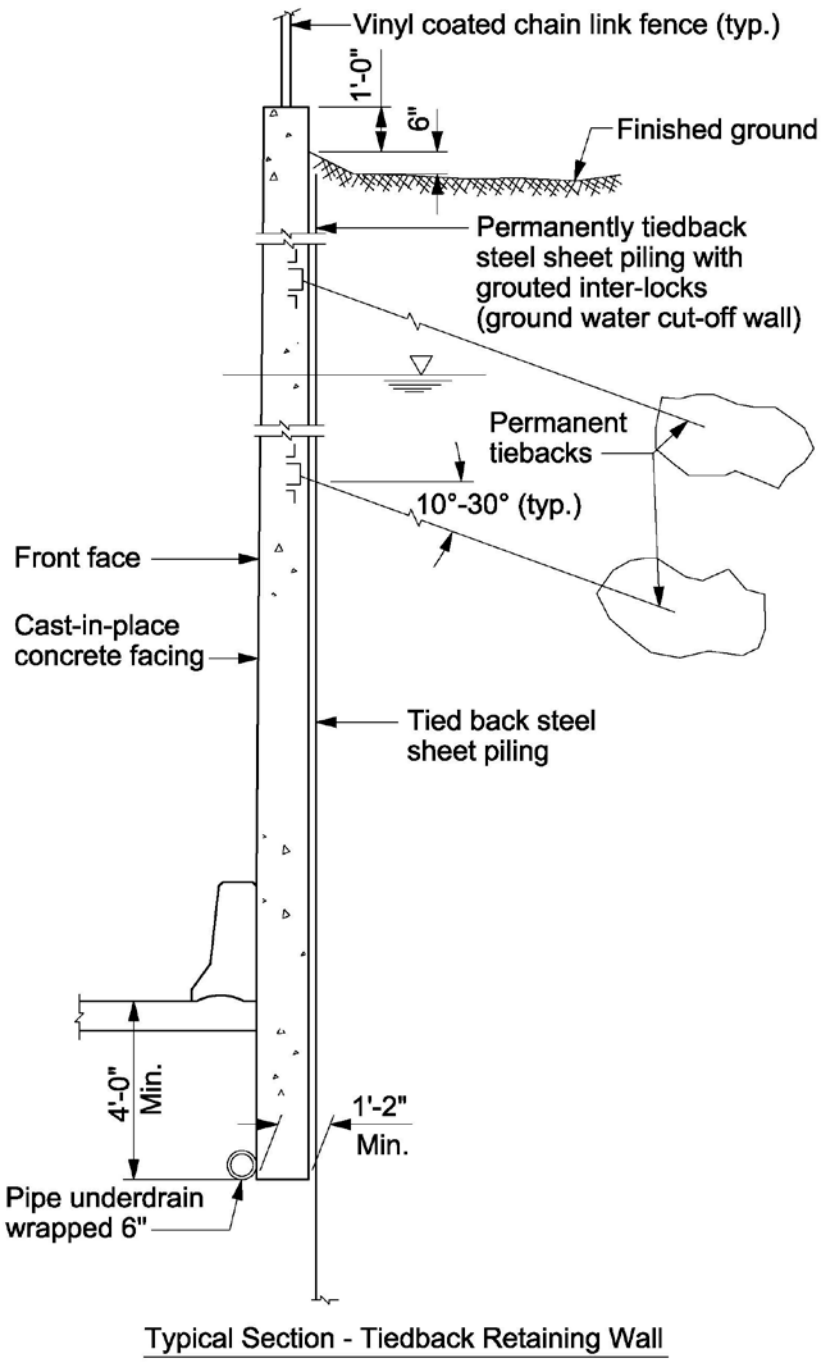

Figure 14.10-1
Typical Anchored Sheet Pile Wall

14.10.6 Summary of Design Requirements

1. Load and Resistance Factor

Load Combination	Load Factors	Resistance Factor
Strength I (maximum)	EH-Horizontal Earth Pressure: δ =1.50 **LRFD [Table 3.4.1-2]**	----------
Strength I (maximum)	LS-Live Load Surcharge: δ =1.75 **LRFD [Table 3.4.1-1]**	----------
Strength I (maximum)	----------	Passive resistance of vertical elements: ϕ=0.75 **LRFD [Table11.5.7-1]**
Service I	----------	Overall Stability: ϕ=0.75, when geotechnical parameters are well defined, and the slope does not support or contain a structural element
Service I	----------	Overall Stability: ϕ=0.65, when geotechnical parameters are based on limited information, or the slope does support or contain a structural element

Table 14.10-1
Summary of Design Requirements

2. Foundation design parameters

   Use values provided by the Geotechnical Engineer of record for permanent sheet pile walls. Temporary sheet pile walls are the Contractor's responsibility.

3. Traffic surcharge

   - Traffic live load surcharge = 240 lb/ft^2 or determined by site condition.
   - If no traffic live load is present, use 100 lb/ft^2 live load for construction equipment

4. Retained soil

   - Unit weight = 120 lb/ft^3
   - Angle of internal friction as determined from the Geotechnical Report.

5. Soil pressure theory

Coulomb Theory.

6. Design life for anchorage hardware

   75 years minimum

7. Steel design properties

   Minimum yield strength = 39,000 psi

14.11 Soldier Pile Walls

Soldier pile walls are comprised of discrete vertical elements (usually steel H piles) and facing members (temporary and/or permanent) that extend between the vertical elements.

14.11.1 Design Procedure for Soldier Pile Walls

LRFD [11.8] Non-Gravity Cantilevered Walls covers the design of soldier pile walls. A simplified earth pressure distribution diagram is shown in **LRFD [3.11.5.6]** for permanent soldier pile walls. Another method that may be used is the "Conventional Method" or "Simplified Method" as described in "*United States Steel Sheet Piling Design Manual*", February, 1974. This method must be modified for the fact that it is based on continuous vertical wall elements whereas, soldier pile walls have discrete vertical wall elements. Using "Broms" method for designing drilled shafts is also acceptable.

The maximum spacing between vertical supporting elements (piles) depends on the wall height and the design parameters of the foundation soil. Spacing of 6 to 12 feet is typical. The piles are set in drilled holes and concrete is placed in the hole after the post is set. The pile system must be designed to handle maximum bending moment along length of embedded shaft. The maximum bending moment at any level in the facing can be determined from formulas in **LRFD [11.8.5.1]**. The minimum structural thickness on wall facings shall be 6 inches for precast panels and 10 inches with cast-in-place concrete.

The diameter of the drilled shaft is also dependent on the wall height and the design parameters of the foundation soil. The larger the diameter of the drilled shaft the smaller will be the required embedment of the shaft. The designer should try various shaft diameters to optimize the cost of the drilled shaft considering both material cost and drilling costs. Note that drilling costs are a function of both hole diameter and depth.

If the vertical elements are steel they shall be shop painted. Wall facings are usually given a special surface treatment created by brooming or tining vertically, using form liners, or using a pattern of rustication strips. The portion of the panel receiving the special treatment may be recessed, forming a border around the treated area. Concrete paints or stains may be used for color enhancements. When panel heights exceed 15 feet anchored walls may be needed. Anchored wall design must be in accordance with **LRFD [11.9]**. Anchors for permanent walls shall be fully encapsulated over their entire length. The anchor hardware shall be designed to have a corrosion resistance durability to ensure a minimum design life of 75 years.

The concrete for soldier pile walls shall have a 28 day compressive strength of 4000 psi if non-prestressed and 5000 psi if prestressed except for the drilled shafts. Concrete for the drilled shafts shall have a 28 day compressive strength of 3500 psi. Reinforcement shall be uncoated Grade 60 in drilled shafts. In lieu of drainage aggregate a membrane may be used to seal the joints between the vertical elements and concrete panels to prevent water leakage. The front face of soldier pile walls shall be battered 1/4" per foot to account for short and long term deflection.

14.11.2 Summary of Design Requirements

Requirements

1. Resistance Factors

   - Overall Stability= 0.65 to 0.75 (based on how well defined the geotechnical parameters are and the support of structural elements)
   - Passive Resistance of vertical Elements = 0.75

2. Foundation Design Parameters

   Use values provided by the Geotechnical Engineer (unit weight, angle of internal friction, and cohesion). Both drained and undrained parameters shall be considered.

3. Concrete Design Data

   - f'_c = 3500 psi (for drilled shafts)
   - f'_c = 4000 psi (non-prestressed panel)
   - f'_c = 5000 psi (prestressed panel)
   - f_y = 60,000 psi

4. Load Factors

   - Vertical earth pressure = 1.5
   - Lateral earth pressure = 1.5
   - Live load surcharge = 1.75

5. Traffic Surcharge

   - Traffic live load surcharge = 2 feet = 240 lb/ft^2
   - If no traffic surcharge, use 100 lb/ft^2

6. Retained Soil

   Use values provided by the Geotechnical Engineer (unit weight, angle of internal friction, and cohesion). Both drained and undrained parameters shall be considered.

7. Soil Pressure Theory

   Rankine's Theory or Coulombs Theory at the discretion of the designer.

8. Design Life for Anchorage Hardware

   75 year minimum

9. Steel Design Properties (H-piles)

   Minimum yield strength = 50,000 psi

14.12 Temporary Shoring

This information is provided for guidance. Refer to the *Facilities Development Manual* for further details.

Temporary shoring is used to support a temporary excavation or protect existing transportation facilities, utilities, buildings, or other critical features when safe slopes cannot be made for structural excavations. Shoring may be required within the limits of structures or on the approach roadway due to grade changes or staged construction. Temporary shoring generally includes non-anchored temporary sheet piles, temporary soldier pile walls, temporary soil nails, cofferdam, or temporary mechanically stabilized earth (MSE) walls.

Temporary shoring is designed by the contractor. Shoring should not be required nor paid for when used primarily for the convenience of the contractor.

14.12.1 When Slopes Won't Work

Typically shoring will be required when safe slopes cannot be made due to geometric constraints of existing and proposed features within the available right-of-way. Occupation and Healthy Safety Administration (OSHA) requirements for temporary excavation slopes vary from a 1H:1V to a 2H:1V. The contractor is responsible for determining and constructing a safe slope based on actual site conditions.

In most cases, the designer can assume that an OSHA safe temporary slope can be cut on a 1.5H:1V slope; however other factors such as soil types, soil moisture, surface drainage, and duration of excavation should also be factored into the actual slope constructed. As an added safety factor, a 3-foot berm should be provided next to critical points or features prior to beginning a 1.5H:1V slope to the plan elevation of the proposed structure. Sufficient room should be provided adjacent to the structure for forming purposes (typically 2-3 feet).

14.12.2 Plan Requirements

Contract plans should schematically show in the plan and profile details all locations where the designer has determined that temporary shoring will be required. The plans should note the estimated length of the shoring as well as the minimum and maximum required height of exposed shoring. These dimensions will be used to calculate the horizontal projected surface area projected on a vertical plane of the exposed shoring face.

14.12.3 Shoring Design/Construction

The Contractor is responsible for design, construction, maintenance, and removal of the temporary shoring system in a safe and controlled manner. The adequacy of the design should be determined by a Wisconsin Professional Engineer knowledgeable of specific site conditions and requirements. The temporary shoring should be designed in accordance with the requirements described in 14.4.2 and 14.4.3. A signed and sealed copy of proposed designs must be submitted to the WisDOT Project Engineer for information.

14.13 Noise Barrier Walls

14.13.1 Wall Contract Process

WisDOT has classified all noise walls (both proprietary and non-proprietary) into three wall systems. All proprietary systems must be pre-approved prior to being considered for use on WisDOT projects. The three noise wall systems that are considered for WisDOT projects include the following:

1. Double-sided sound absorptive noise barriers
2. Single-sided sound absorptive noise barriers
3. Reflective noise barriers

If a wall is required, the designer must determine which wall system or systems are suitable for a given wall location. In some locations all wall systems may be suitable, whereas in other locations some wall systems may not be suitable. Information on aesthetic qualities and special finishes and colors of proprietary systems is available from the manufacturers. Information on approved concrete paints, stains and coatings is also available from the Structures Design Section. Designers are encouraged to contact the Structures Design Section (608-266-8494) if they have any questions about the material presented in the *Bridge Manual*.

The step by step process required to select a suitable wall system or systems for a given wall location is as follows:

Step 1: Investigate alternatives

Investigate alternatives to walls such as berms, plantings, etc.

Step 2: Geotechnical analysis

If a wall is required, geotechnical personnel shall conduct a soil investigation at the wall location and determine soil design parameters for the foundation soil. Geotechnical personnel are also responsible for recommending remedial methods of improving soil bearing capacity if required.

Step 3: Evaluate basic wall restrictions

The designer shall examine the list of suitable wall systems using the Geotechnical Report and remove any system that does not meet usage restrictions for the site.

Step 4: Determine suitable wall systems

The designer shall further examine the list of suitable wall systems for conformance to other considerations. Refer to Chapter 2 – General and Chapter 6 – Plan Preparation for a discussion on aesthetic considerations.

Step 5: Determine contract letting

After the designer has established the suitable wall system(s), the method of contract letting can be determined. The designer has several options based on the contents of the list.

Option 1:

The list contains only non-proprietary systems.

Under Option 1, the designer will furnish a complete design for one of the non-proprietary systems.

Option 2:

The list contains proprietary wall systems only or may contain both proprietary and non-proprietary wall systems, but the proprietary wall systems are deemed more appropriate than the non-proprietary systems.

Under Option 2 the designer will not furnish a design for any wall system. The contractor can build any wall system which is included on the list. The contractor is responsible for providing the complete design of the wall system selected, either by the wall supplier for proprietary walls or by the contractor's engineer for non-proprietary walls. Contract special provisions, if not in the Supplemental Specs., must be included in the contract document for each wall system that is allowed. Under Option 2, at least two and preferably three wall suppliers must have an approved product that can be used at the project site. See the *Facilities Development Manual* (Procedure 19-1-5) for any exceptions.

Option 3:

The list contains proprietary wall systems and non-proprietary wall systems and the non-proprietary systems are deemed equal or more appropriate than the proprietary systems.

Under Option 3 the designer will furnish a complete design for one of the non-proprietary systems, and list the other allowable wall systems.

Step 6: Prepare Contract Plans

Refer to section 14.16 for information required on the contract plans for proprietary systems. If a contractor chooses an alternate wall system, the contractor will provide the plans for the wall system chosen.

Step 7: Prepare Contract Special Provisions

The Structures Design Section and Region Offices have Special Provisions for each wall type and a generic Special Provision to be used for each project. The list of proprietary wall suppliers is maintained by the Materials Quality Assurance Unit.

Complete the generic Special Provision for the project by inserting the list of wall systems allowed and specifying the approved list of suppliers if proprietary wall systems are selected.

Step 8: Submit P.S.& E. (Plans, Specifications and Estimates)

When the plans are completed and all other data is completed, submit the project into the P.S.& E. process. Note that there is one bid item, square feet of exposed wall, for all wall quantities.

Step 9: Preconstruction Review

The contractor must supply the name of the wall system supplier and pertinent construction data to the project manager. This data must be accepted by the Office of Design, Contract Plans Section before construction may begin. Refer to the Construction and Materials Manual for specific details.

Step 10: Project Monitoring

It is the responsibility of the project manager to verify that the project is constructed with the previously accepted contract proposal. Refer to the Construction and Materials Manual for monitoring material certification, construction procedures and material requirements.

14.13.2 Pre-Approval Process

The purpose of the pre-approval process is to ascertain that a particular proprietary wall system has the capability of being designed and built according to the requirements and specifications of WisDOT. Any unique design requirements that may be required for a particular system are also identified during the pre-approval process. A design of a pre-approved system is acceptable for construction only after WisDOT has verified that the design is in accordance with the design procedures and criteria stated in the Certification Method of Acceptance for Noise Barrier Walls.

In addition to design criteria, suppliers must provide materials testing data and certification results for the required tests for durability, etc. The submittal requirements for the pre-approval process and other related information are available from the Materials Quality Assurance Unit, Madison, Wisconsin.

14.14 Contract Plan Requirements

The following minimum information shall be required on the plans.

1. Finish grades at rear and front of wall at 25 foot intervals or less.
2. Final cross sections as required for wall designer.
3. Beginning and end stations of wall and offsets from reference line to front face of walls. If reference line is a horizontal curve give offsets from a tangent to the curve.
4. Location of right-of-way boundaries, and construction easements relative to the front face of the walls.
5. Location of utilities if any and indicate whether to remain in place or be relocated or abandoned.
6. Special requirements on top of wall such as copings, railings, or traffic barriers.
7. Footing or leveling pad elevations if different than standard.
8. General notes on standard insert sheets.
9. Soil design parameters for retained soil, backfill soil and foundation soil including angle of internal friction, cohesion, coefficient of sliding friction, groundwater information and ultimate and/or allowable bearing capacity for foundation soil. If piles are required, give skin friction values and end bearing values for displacement piles and/or the allowable steel stress and anticipated driving elevation for end bearing piles.
10. Soil borings.
11. Details of special architectural treatment required for each wall system.
12. Wall systems, system or sub-systems allowed on projects.
13. Abutment details if wall is component of an abutment.
14. Connection and/or joint details where wall joins another structure.
15. Groundwater elevations.
16. Drainage provisions at heel of wall foundations.
17. Drainage at top of wall to divert run-off water.
18. Location of name plate.

14.15 Construction Documents

14.15.1 Bid Items and Method of Measurement

Proprietary retaining walls shall include all required bid items necessary to build the wall system provided by the contractor. The unit of measurement shall be square feet and shall include the exposed wall area between the footing and the top of the wall measured to the top of any copings. For setback walls the area shall be based on the walls projection on a vertical plane. The bid item includes designing the walls preparing plans, furnishing and placing all materials, including all excavations, temporary bracing, piling, (including delivered and driven), poured in place or precast concrete or blocks, leveling pads, soil reinforcement systems, structural steel, reinforcing steel, backfills and infills, drainage systems and aggregate, geotextiles, architectural treatment including painting and/or staining, drilled shafts, wall toppings unless excluded by contract, wall plantings, joint fillers, and all labor, tools, equipment and incidentals necessary to complete the work.

The contractor will be paid for the plan quantity as shown on the plans. (The intent is a lump sum bid item but is bid as square feet of wall). The top of wall coping is any type of cap placed on the wall. It does not include any barriers. Measurement is to the bottom of the barrier when computing exposed wall area.

Non-proprietary retaining walls are bid based on the quantity of materials used to construct the wall such as concrete, reinforcing steel, piling, etc. These walls are:

- Cast-in-Place Concrete Cantilever Walls
- Soldier Pile Walls
- Steel Sheet Piling Walls

14.15.2 Special Provisions

The Structures Design Section has Standard Special Provisions for:

- Wall Modular Block Gravity LRFD, Item SPV.0165.
- Wall Modular Block Mechanically Stabilized Earth LRFD/QMP, Item SPV.0165
- Wall Concrete Panel Mechanically Stabilized Earth LRFD/QMP, Item SPV.0165
- Wall CIP Facing Mechanically Stabilized Earth LRFD, Item SPV.0165.
- Wall Wire Faced Mechanically Stabilized Earth LRFD/QMP, Item SPV.0165.
- Temporary Wall Wire Faced Mechcanically Stabilized Earth LRFD/QMP, Item SPV.0165
- *Wall Gabion LRFD, SPV under development.*

- *Wall Modular Bin or Crib LRFD, SPV under development.*

Note that the use of QMP Special Provisions began with the December 2014 letting or prior to December 2014 letting at the Region's request.

The designer determines what wall systems(s) are applicable for the project. The approved names of suppliers are inserted for each eligible wall system. The list of approved proprietary wall suppliers is maintained by the Bureau of Structures which is responsible for the Approval Process for earth retaining walls, 14.16.

14.16 Submittal Requirements for Pre-Approval Process

14.16.1 General

The following four wall systems require the supplier or manufacturer to submit to the Structural Design Section a package that addresses the items specified in paragraph C.

1. Modular Block Gravity Walls
2. MSE Walls with Modular Block Facings
3. MSE Walls with Precast Concrete Panel Facings
4. Modular Concrete Bin or Crib Walls

14.16.2 General Requirements

Approval of retaining wall systems allows for use of these systems on Wisconsin Department of Transportation (WisDOT) projects upon the manufacturer's certification that the system as furnished to the contractor (or purchasing agency) complies with the design procedures specified in the *Bridge Manual*. WisDOT projects include: State, County and Municipal Federal Aid and authorized County and Municipal State Aid projects in addition to materials purchased directly by the state.

The manufacturer shall perform all specification tests with qualified personnel and maintain an acceptable quality control program. The manufacturer shall maintain records of all its control testing performed in the production of retaining wall systems. These test records shall be available at all times for examination by the Construction Materials Engineer for Highways or designee. Approval of materials will be contingent upon satisfactory compliance with procedures and material conformance to requirements as verified by source and field samples. Sampling will be performed by personnel during the manufacture of project specific materials.

14.16.3 Qualifying Data Required For Approval

Applicants requesting Approval for a specific system shall provide three copies of the documentation showing that they comply with *AASHTO LRFD* and *WisDOT Standard Specifications* and the design criteria specified in the *Bridge Manual*.

1. An overview of the system, including system theory.
2. Laboratory and field data supporting the theory.
3. Detailed design procedures, including sample calculations for installations with no surcharge, level surcharge and sloping surcharge.
4. Details of wall elements, analysis of structural elements, capacity demand ratio, load and resistance factors, estimated life, corrosion design procedure for soil reinforcement elements, procedures for field and laboratory evaluation including instrumentation and special requirements, if any.

5. Sample material and construction control specifications - showing material type, quality, certifications, field testing and placement procedures.

6. A well documented field construction manual describing in detail and with illustrations where necessary, the step by step construction sequence.

7. Details for mounting a concrete traffic barrier on the wall adjoining both concrete and flexible pavements (if applicable).

8. Pullout data for facing block/geogrid connection and soil pullout data (if applicable).

9. Submission of practical application with photos for all materials, surface textures and colors representative of products being certified.

10. Submission, if requested, to an on-site production process control review, and record keeping review.

11. List of installations including owner name and wall location.

12. Limitations of the wall system.

The above materials may be submitted at any time (recommend a minimum of 15 weeks) but, to be considered for a particular WisDOT project, must be approved prior to the bid opening date. The material should be clearly detailed and presented according to the prescribed outline.

After final review and approval of comments with the Bureau of Structures, the manufacturer will be approved to begin presenting the system on qualified projects.

14.16.4 Maintenance of Approval Status as a Manufacturer

The supplier or manufacturer must request to be reapproved bi-annually. The request shall be in writing and certify that the plant production process control and materials testing and design procedures haven't changed since the last review. The request shall be received within two years of the previous approval or the approval status will be terminated. Upon request for re-approval an on-site review of plant process control and materials testing may be conducted by WisDOT personnel. Travel expenses for trips outside the State of Wisconsin involved with this review will be borne by the manufacturer.

For periodic on-site reviews, access to the plant operations and materials records shall be provided to a representative of the Construction Materials Engineer during normal working hours upon request.

If the supplier or manufacturer introduces a new material, or cross-section, or a new design procedure, into its product line, the new feature must be submitted for approval. If the new feature/features are significantly different from the original product, the new product may be subjected to a complete review for approval.

14.16.5 Loss of Approved Status

Approval to deliver the approved system may be withdrawn under the following conditions:

Design Conformance

1. Construction does not follow design procedures.
2. Incorrect design procedures are used on projects.

Materials

3. Inability to consistently supply material meeting specification.
4. Inability to meet test method precision limits for quality control testing.
5. Lack of maintenance of required records.
6. Improper documentation of shipments.
7. Not maintaining an acceptable quality control program.

The decision to remove approval from a manufacturer on a specific system rests with the Construction Materials Engineer for Highways or the State Bridge Engineer.

14.17 References

1. State of Wisconsin, Department of Transportation, *Facilities Development Manual*

2. American Association of State highway and Transportation officials. *Standard Specification for highway Bridges*

3. American Association of State highway and Transportation officials. *AASHTO LRFD Bridge Design Specifications*

4. AASHTO LRFD Bridge Design Specification 4th Edition, 2007, AASHTO, 444 North Capitol Street, N.W., Suite 249, Washington, D.C. 20001.

5. Berg, Christopher and Samtani. *Design and Construction of Mechanically Stabilized Earth Walls and Reinforced Soil Slopes*. Publication No.FHWA-NHI-10-024.2009.

6. Bowles, Joseph E*. Foundation Analysis and Design 4th Edition.* McGraw Hill *1989*

7. Cudoto, Donald P. *Foundation Design Principles and Practices (* 2nd Edition*),* Prentice Halls

8. National Concrete Masonry Association, "Design Manual for Segmental Retaining Walls", 2302 Horse Pen Road, Herndon, Virginia 22071-3406.

9. Lazarte, Elias, Espinoza, Sabatini. *Geotechnical Engineering Circular No 7. Soil Nailing Walls*, FHWA

10. Publication No FHWA-SA-96-069R , "*Manual for design and construction of Soil Nail walls*

11. Publication No.FHWA-HI-98-032, "Load and Resistance Factor Design (LRFD) for Highway Bridge Substructures".

12. Publication No.FHWA-NHI-07-071, "Earth retaining Structures".

13. Publication No.FHWA-NHI-09-083, "Load and Resistance Factor Design (LRFD) for Highway Bridge Substructures".

14. Publication No. FHWA-NHI-09-087, "Corrosion/Degradation of Soil Reinforcements for Mechanically Stabilized Earth Walls and Reinforced slopes"

15. Publication No.FHWA-NHI-10-024, "Design and Construction of Mechanically Stabilized earth Walls and Reinforced Soil Slopes-Volume I".

16. Publication No.FHWA-NHI-10-025, "Design and Construction of Mechanically Stabilized earth Walls and Reinforced Soil Slopes-Volume II".

14.18 Design Examples

E14-1 Cast-In-Place Concrete Cantilever Wall on Spread Footing, LRFD

E14-2 Precast Panel Steel Reinforced MSE Wall, LRFD

E14-3 Modular Block Facing Geogrid Reinforced MSE Wall, LRFD

E14-4 Cast-In-Place Concrete Cantilever Wall on Piles, LRFD

E14-5 Sheet Pile Wall, LRFD

This page intentionally left blank.

Table of Contents

E14-1 Cast-In-Place Concrete Cantilever Wall on Spread Footing, LRFD 2
E14-1.1 Establish Project Requirements 2
E14-1.2 Design Parameters 3
E14-1.3 Define Wall Geometry 5
E14-1.4 Permanent and Transient Loads 7
E14-1.4.1 Compute Earth Pressure Coefficients 7
E14-1.4.1.1 Compute Active Earth Pressure Coefficient 7
E14-1.4.1.2 Compute Passive Earth Pressure Coefficient 7
E14-1.4.2 Compute Unfactored Loads 8
E14-1.4.3 Summarize Applicable Load and Resistance Factors 12
E14-1.4.4 Compute Factored Loads and Moments 13
E14-1.5 Compute Bearing Resistance, qR 15
E14-1.6 Evaluate External Stability of Wall 17
E14-1.6.1 Bearing Resistance at Base of the Wall 17
E14-1.6.2 Limiting Eccentricity at Base of the Wall 18
E14-1.6.3 Sliding Resistance at Base of the Wall 19
E14-1.7 Evaluate Wall Structural Design 20
E14-1.7.1 Evaluate Heel Strength 20
E14-1.7.1.1 Evaluate Heel Shear Strength 20
E14-1.7.1.2 Evaluate Heel Flexural Strength 21
E14-1.7.2 Evaluate Toe Strength 23
E14-1.7.2.1 Evaluate Toe Shear Strength 23
E14-1.7.2.2 Evaluate Toe Flexural Strength 25
E14-1.7.3 Evaluate Stem Strength 26
E14-1.7.3.1 Evaluate Stem Shear Strength at Footing 26
E14-1.7.3.2 Evaluate Stem Flexural Strength at Footing 28
E14-1.7.3.3 Transfer of Force at Base of Stem 30
E14-1.7.4 Temperature and Shrinkage Steel 30
E14-1.7.4.1 Temperature and Shrinkage Steel for Footing 30
E14-1.7.4.2 Temperature and Shrinkage Steel of Stem 30
E14-1.8 Summary of Results 31
E14-1.8.1 Summary of External Stability 31
E14-1.8.2 Summary of Wall Strength Design 32
E14-1.8.3 Drainage Design 32
E14-1.9 Final CIP Concrete Wall Schematic 32

E14-1 Cast-In-Place Concrete Cantilever Wall on Spread Footing, LRFD

General

This example shows design calculations for a cast-in-place (CIP) concrete wall supported on a spread footing conforming to the LRFD Bridge Design Specifications and the WisDOT Bridge Manual. ***(Example is current through LRFD Seventh Edition - 2016 Interim)***

Sample design calculations for bearing resistance, external stability (sliding, eccentricity and bearing) and wall strength design will be presented. The overall stability and settlement calculations will not be shown in this example, but are required.

Design steps presented in 14.5.2.1 are used for the wall design.

E14-1.1 Establish Project Requirements

The CIP concrete wall shown in Figure E14-1.1-1 will be designed appropriately to accommodate a State Trunk Highway. External stability, overall stability and wall strength are the designer's (WisDOT/Consultant) responsibility.

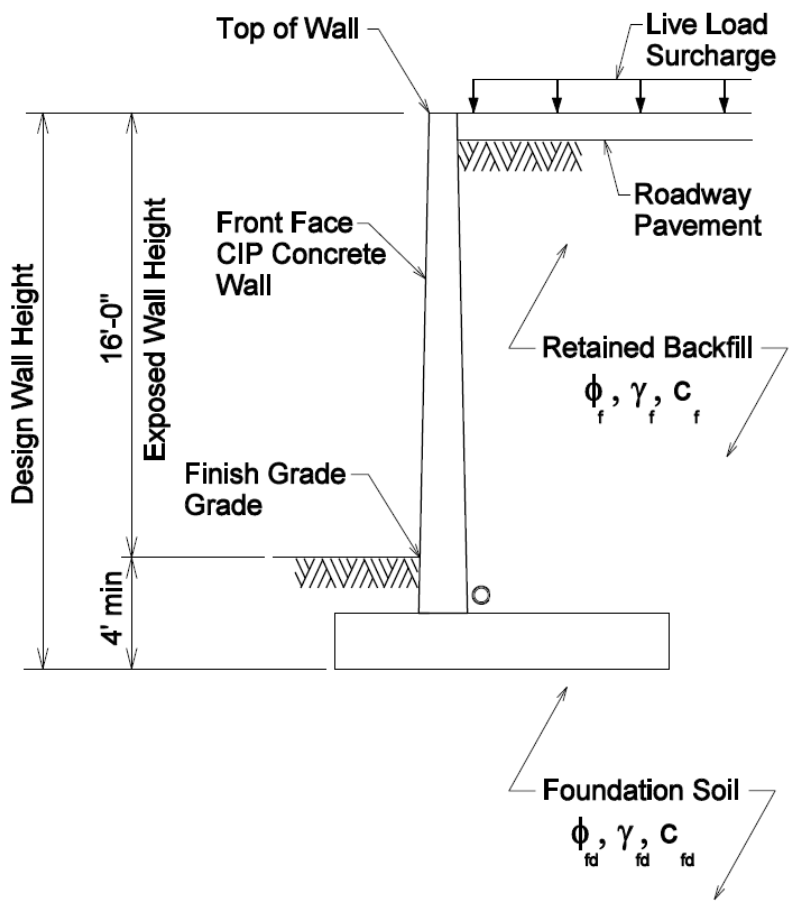

Figure E14-1.1-1
CIP Concrete Wall Adjacent to Highway

E14-1.2 Design Parameters

Project Parameters

$Design_Life = 75$ years — Wall design life (min) **LRFD [11.5.1]**

Soil Properties (From Geotechnical Site Investigation Report)

Designer to determine if long-term or short-term soil strength parameters govern external stability.

Backfill Soil Design Parameters

$\phi_f = 30$ deg — Angle of internal friction

$\gamma_f = 0.120$ — Unit weight, kcf

$c_f = 0$ — Cohesion, ksf

$\delta = 21$ deg — Friction angle between fill and wall

Note: Per WisDOT Bridge Manual and Standard Specifications, structural backfill shall be granular and non-expansive.

Foundation Soil Design Parameters

$\phi_{fd} = 34$ deg — Angle of internal friction

$\gamma_{fd} = 0.120$ — Unit of weight, kcf

$c_{fd} = 0$ — Cohesion, ksf

Reinforced Concrete Parameters

$f'_c = 3.5$ — Concrete compressive design strength, ksi (14.5.9)

$\gamma_c = 0.150$ $\quad w_c = \gamma_c$ — Unit weight of concrete, ksi

$E_c = 33000\, w_c^{1.5} \sqrt{f'_c}$ — Modulus of elasticity of concrete, ksi **LRFD [C5.4.2.4]**

$\boxed{E_c = 3587}$ ksi

$f_y = 60$ — Yield strength of reinforcing bars, ksi (14.5.9)

$E_s = 29000$ — Modulus of elasticity of reinforcing bars, ksi

Live Load Surcharge Parameters

Live load surcharge shall be used when vehicular load is located within H/2 of the backface of the wall **LRFD [3.11.6.4].** The equivalent height of soil for vehicular load, H_{eq}, used for surcharge loads shall be in accordance to **LRFD [Table 3.11.6.4-2]**. However, WisDOT policy for most cases requires an equivalent height of 2.0 feet. The following procedure is used for determining live load surcharge:

$L_{traffic} = 1.0$ Distance from wall backface to edge of traffic, ft

$\frac{H}{2} = 10.00$ Distance from wall backface where live load surcharge shall be considered in the wall design, ft

Note: The wall height used is the exposed height plus an assumed 4 feet embedment ($H=H_e+4$ feet)

Shall live load surcharge be included? check = "YES"

$h_{eq} = 2.0$ Equivalent height of soil for surcharge load, ft (14.4.5.4.2)

Pavement Parameters

$\gamma_p = 0.150$ Pavement unit weight, kcf

Resistance Factors

$\phi_b = 0.55$ Bearing resistance (gravity and semi-gravity walls) **LRFD [Table 11.5.7-1]**

$\phi_s = 1.00$ Sliding resistance **LRFD [Table 11.5.7-1]**

$\phi_\tau = 1.00$ Sliding resistance (shear resistance between soil and foundation) **LRFD [Table 11.5.7-1]**

$\phi_{ep} = 0.50$ Sliding resistance (passive resistance) **LRFD [Table 10.5.5.2.2-1]**

$\phi_F = 0.90$ Concrete flexural resistance (Assuming tension-controlled) **LRFD [5.5.4.2.1]**

$\phi_v = 0.90$ Concrete shear resistance **LRFD [5.5.4.2.1]**

E14-1.3 Define Wall Geometry

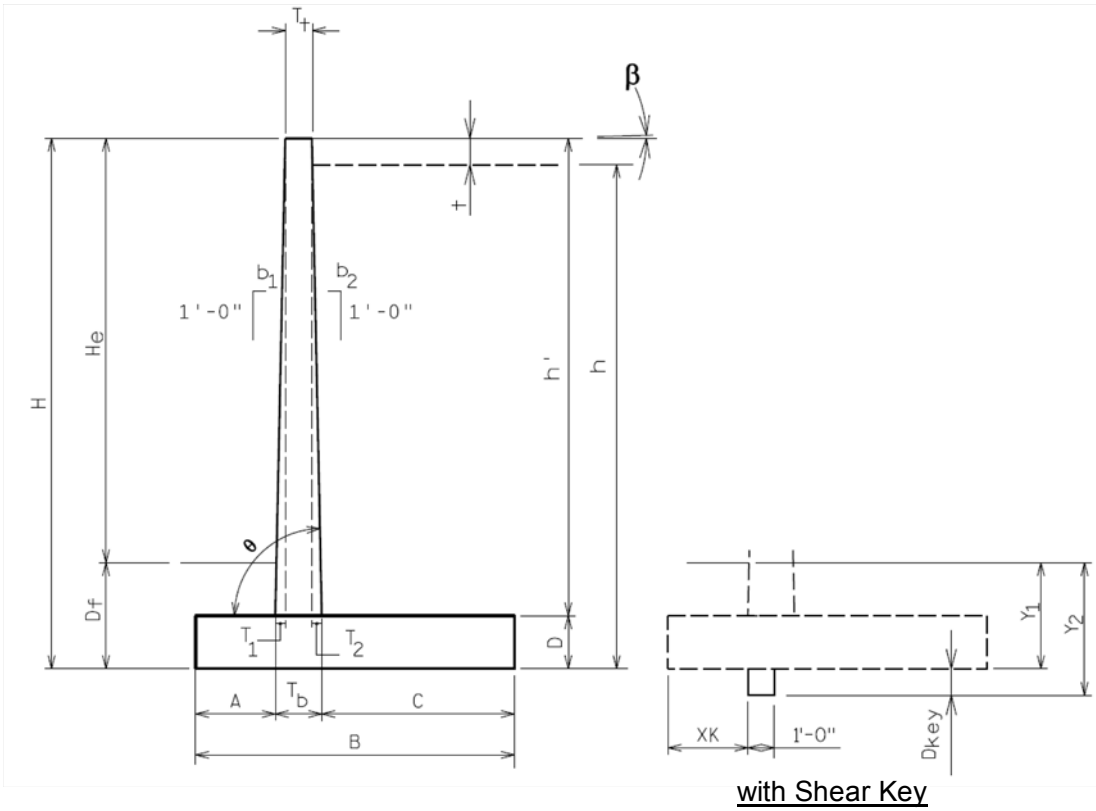

Figure E14-1.3-1
CIP Concrete Wall Geometry

Wall Geometry

$H_e = 16.0$	Exposed wall height, ft
$D_f = 4.0$	Footing cover, ft (WisDOT policy 4'-0" minimum)
$H = H_e + D_f$	Design wall height, ft
$T_t = 1.0$	Stem thickness at top of wall, ft
$b_1 = 0.25$	Front wall batter, in/ft (b_1H:12V)
$b_2 = 0.50$	Back wall batter, in/ft (b_2H:12V)
$\beta = 0$ deg	Inclination of ground slope behind face of wall, deg (horizontal)
$t = 1.0$	Pavement thickness, ft

Preliminary Wall Dimensioning

Selecting the most optimal wall configuration is an iterative process and depends on site conditions, cost considerations, wall geometry and aesthetics. For this example, the iterative process has been completed and the final wall dimensions are used for design checks.

$H = 20.0$	Design wall height, ft	
$B = 10.0$	Footing base width, ft (2/5H to 3/5H)	
$A = 3.5$	Toe projection, ft (H/8 to H/5)	
$D = 2.0$	Footing thickness, ft (H/8 to H/5)	
	WisDOT policy: $H \le 10'\text{-}0''$ $D_{min}=1'\text{-}6''$ $H > 10'\text{-}0''$ $D_{min}=2'\text{-}0''$	

Shear Key Dimensioning

$D_{key} = 1.0$	Depth of shear key from bottom of footing, ft	
$D_w = 1.0$	Width of shear key, ft	
$XK = A$	Distance from toe to shear key, ft	

Other Wall Dimensioning

$h' = H - D$	Stem height, ft	$h' = 18.00$
$T_1 = b_1 \frac{h'}{12}$	Stem front batter width, ft	$T_1 = 0.375$
$T_2 = b_2 \frac{h'}{12}$	Stem back batter width, ft	$T_2 = 0.750$
$T_b = T_1 + T_t + T_2$	Stem thickness at bottom of wall, ft	$T_b = 2.13$
$C = B - A - T_b$	Heel projection, ft	$C = 4.38$
$\theta = \text{atan}\left(\frac{12}{b_2}\right)$	Angle of back face of wall to horizontal	$\theta = 87.6$ deg
$b = 12$	Concrete strip width for design, in	
$y_1 = D_f$	Bottom of footing depth, ft	$y_1 = 4.0$
$y_2 = D_f + D_{key}$	Bottom of shear key depth, ft	$y_2 = 5.0$
$h = H - t + (T_2 + C)\tan(\beta)$	Retained soil height, ft	$h = 19.0$

E14-1.4 Permanent and Transient Loads

In this example, load types DC (dead load components), EV (vertical earth pressure), EH (horizontal earth pressure) and LS (live load surcharge) will be used. Soil above the toe will be ignored as well as its passive resistance. When a shear key is present only the passive soil resistance from the vertical face of the shear key will be included in sliding resistance.

E14-1.4.1 Compute Earth Pressure Coefficients

Active and passive earth pressures

E14-1.4.1.1 Compute Active Earth Pressure Coefficient

Compute the coefficient of active earth pressure using Coulomb Theory **LRFD [Eq 3.11.5.3-1]**

$\phi_f = 30.0$ deg

$\beta = 0.0$ deg

$\theta = 87.6$ deg

$\delta = 21.0$ deg

$$k_a = \frac{\sin(\theta + \phi_f)^2}{\Gamma \sin(\theta)^2 \sin(\theta - \delta)}$$

$$\Gamma = \left(1 + \sqrt{\frac{\sin(\phi_f + \delta)\ \sin(\phi_f - \beta)}{\sin(\theta - \delta)\ \sin(\theta + \beta)}}\right)^2 \qquad \boxed{\Gamma = 2.726}$$

$$k_a = \frac{\sin(\theta + \phi_f)^2}{\Gamma \sin(\theta)^2 \sin(\theta - \delta)} \qquad \boxed{k_a = 0.314}$$

E14-1.4.1.2 Compute Passive Earth Pressure Coefficient

Compute the coefficient of passive earth pressure using Rankine Theory

$$k_p = \tan\left(45\ \text{deg} + \frac{\phi_{fd}}{2}\right)^2 \qquad \boxed{k_p = 3.54}$$

E14-1.4.2 Compute Unfactored Loads

The forces and moments are computed by using Figures E14-1.3-1 and E14-1.3-3 and by their respective load types **LRFD [Tables 3.4.1-1 and 3.4.1-2]**

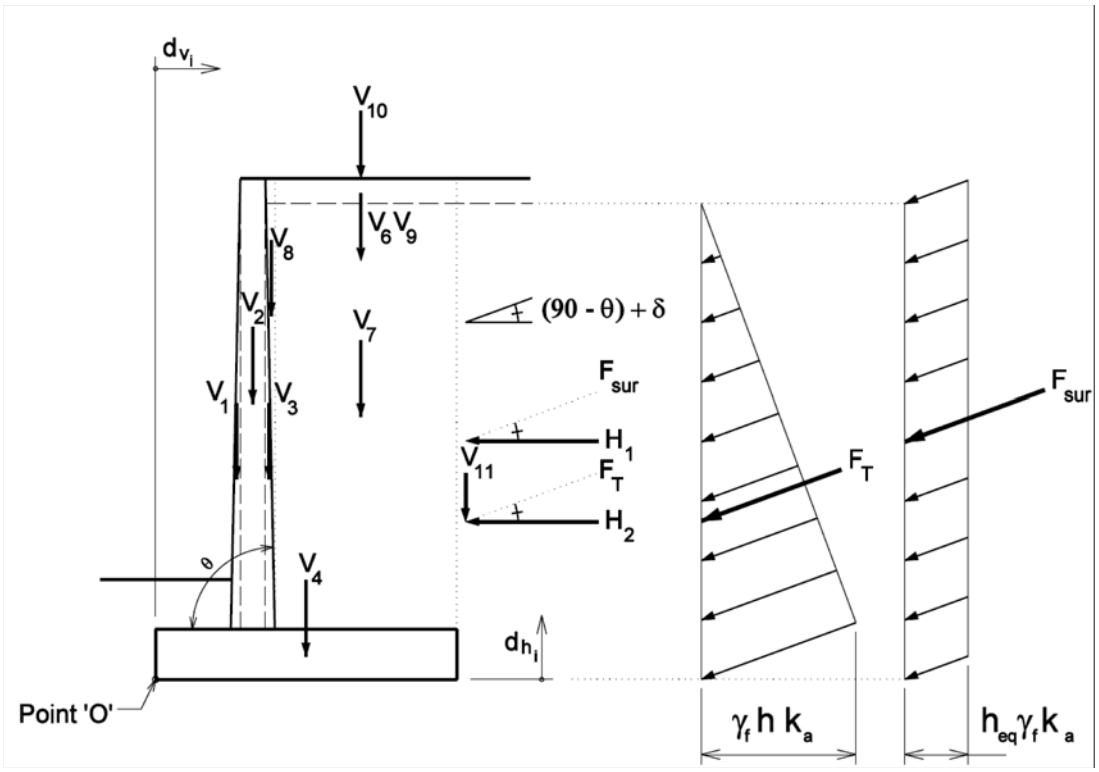

Figure E14-1.4-3
CIP Concrete Wall - External Stability

Active Earth Force Resultant (kip/ft), F_T

$$F_T = \frac{1}{2} \gamma_f h^2 k_a$$

Active earth force resultant (EH) $\boxed{F_T = 6.81}$

Live Load Surcharge Load (kip/ft), F_{sur}

$$F_{sur} = \gamma_f h_{eq} h k_a$$

Live load surcharge resultant (LS) $\boxed{F_{sur} = 1.43}$

Vertical Loads (kip/ft), V_i

$$V_1 = \frac{1}{2} T_1 h' \gamma_c$$

Wall stem front batter (DC) $\boxed{V_1 = 0.51}$

$$V_2 = T_t h' \gamma_c$$

Wall stem (DC) $\boxed{V_2 = 2.70}$

$$V_3 = \frac{1}{2} T_2 h' \gamma_c$$

Wall stem back batter (DC) $\boxed{V_3 = 1.01}$

$V_4 = D\ B\ \gamma_c$ Wall footing (DC) $V_4 = 3.00$

$V_6 = t\left(T_2 + C\right)\gamma_p$ Pavement (DC) $V_6 = 0.77$

$V_7 = C\ (h' - t)\ \gamma_f$ Soil backfill - heel (EV) $V_7 = 8.92$

$V_8 = \frac{1}{2}\ T_2\ (h' - t)\ \gamma_f$ Soil backfill - batter (EV) $V_8 = 0.77$

$V_9 = \frac{1}{2}\left(T_2 + C\right)\left[\left(T_2 + C\right)\tan(\beta)\right]\gamma_f$

Soil backfill - backslope (EV) $V_9 = 0.00$

$V_{10} = h_{eq}\left(T_2 + C\right)\gamma_f$

Live load surcharge (LS) $V_{10} = 1.23$

$V_{11} = F_T\ \sin(90\ \text{deg} - \theta + \delta)$

Active earth force resultant (vertical component - EH) $V_{11} = 2.70$

Moments produced from vertical loads about Point 'O' (kip-ft/ft), MV_i

Moment Arm (ft)		Moment (kip-ft/ft)	
$d_{v1} = A + \frac{2}{3}\ T_1$	$d_{v1} = 3.8$	$MV_1 = V_1\ d_{v1}$	$MV_1 = 1.9$
$d_{v2} = A + T_1 + \frac{T_t}{2}$	$d_{v2} = 4.4$	$MV_2 = V_2\ d_{v2}$	$MV_2 = 11.8$
$d_{v3} = A + T_1 + T_t + \frac{T_2}{3}$	$d_{v3} = 5.1$	$MV_3 = V_3\ d_{v3}$	$MV_3 = 5.2$
$d_{v4} = \frac{B}{2}$	$d_{v4} = 5.0$	$MV_4 = V_4\ d_{v4}$	$MV_4 = 15.0$
$d_{v6} = B - \left(\frac{T_2 + C}{2}\right)$	$d_{v6} = 7.4$	$MV_6 = V_6\ d_{v6}$	$MV_6 = 5.7$
$d_{v7} = B - \frac{C}{2}$	$d_{v7} = 7.8$	$MV_7 = V_7\ d_{v7}$	$MV_7 = 69.7$

$d_{v8} = A + T_1 + T_t + \frac{2T_2}{3}$ $\boxed{d_{v8} = 5.4}$ $MV_8 = V_8\ d_{v8}$ $\boxed{MV_8 = 4.1}$

$d_{v9} = A + T_1 + T_t + \frac{2\left(T_2 + C\right)}{3}$ $\boxed{d_{v9} = 8.3}$ $MV_9 = V_9\ d_{v9}$ $\boxed{MV_9 = 0.0}$

$d_{v10} = B - \left(\frac{T_2 + C}{2}\right)$ $\boxed{d_{v10} = 7.4}$ $MV_{10} = V_{10}\ d_{v10}$ $\boxed{MV_{10} = 9.1}$

$d_{v11} = B$ $\boxed{d_{v11} = 10.0}$ $MV_{11} = V_{11}\ d_{v11}$ $\boxed{MV_{11} = 27.0}$

Horizontal Loads (kip/ft), H_i

$H_1 = F_{sur} \cos(90\ \text{deg} - \theta + \delta)$

Live load surcharge (LS) $\boxed{H_1 = 1.32}$

$H_2 = F_T \cos(90\ \text{deg} - \theta + \delta)$

Active earth force
(horizontal component) (EH) $\boxed{H_2 = 6.25}$

Moments produced from horizontal loads about about Point 'O' (kip-ft/ft), MH_i

Moment Arm (ft)		Moment (kip-ft/ft)	
$d_{h1} = \frac{h}{2}$	$\boxed{d_{h1} = 9.5}$	$MH_1 = H_1\ d_{h1}$	$\boxed{MH_1 = 12.5}$
$d_{h2} = \frac{h}{3}$	$\boxed{d_{h2} = 6.3}$	$MH_2 = H_2\ d_{h2}$	$\boxed{MH_2 = 39.6}$

Summary of Unfactored Forces & Moments:

Load			Moment Arm		Moment		LRFD Load Type
Item	Description	Value (kip/ft)	Item	Value (ft)	Item	Value (kip-ft/ft)	
V_1	Wall stem front batter	0.51	d_{v1}	3.8	MV_1	1.9	DC
V_2	Wall stem	2.70	d_{v2}	4.4	MV_2	11.8	DC
V_3	Wall stem back batter	1.01	d_{v3}	5.1	MV_3	5.2	DC
V_4	Wall footing	3.00	d_{v4}	5.0	MV_4	15.0	DC
V_6	Pavement	0.77	d_{v6}	7.4	MV_6	5.7	DC
V_7	Soil backfill	8.92	d_{v7}	7.8	MV_7	69.7	EV
V_8	Soil backfill	0.77	d_{v8}	5.4	MV_8	4.1	EV
V_9	Soil backfill	0.00	d_{v9}	8.3	MV_9	0.0	EV
V_{10}	Live load surcharge	1.23	d_{v10}	7.4	MV_{10}	9.2	LS
V_{11}	Active earth pressure	2.70	d_{v11}	10.0	MV_{11}	27.0	EH

Table E14-1.4-1
Unfactored Vertical Forces & Moments

Load			Moment Arm		Moment		LRFD Load Type
Item	Description	Value (kip/ft)	Item	Value (ft)	Item	Value (kip-ft/ft)	
H_1	Live load surcharge	1.32	d_{h1}	9.5	MH_1	12.5	LS
H_2	Active earth force	6.25	d_{h2}	6.3	MH_2	39.6	EH

Table E14-1.4-2
Unfactored Horizontal Forces & Moments

E14-1.4.3 Summarize Applicable Load and Resistance Factors

Maximum and minimum load factors shall be used to determine the extreme load effects. WisDOT's policy is to set all the load modifiers to zero($n = 1.0$). Factored loads and moments for each limit state are calculated by applying the appropriate load factors **LRFD [Tables 3.4.1-1 and 3.4.1-2]**. The following load combinations will be used in this example:

Load Combination	γ_{DC}	γ_{EV}	γ_{LS_V}	γ_{LS_H}	γ_{EH}	Application
Strength Ia	0.90	1.00	-	1.75	1.50	Sliding, Eccentricity
Strength Ib	1.25	1.35	1.75	1.75	1.50	Bearing, Wall Strength
Service I	1.00	1.00	1.00	1.00	1.00	Wall Crack Control

Table E14-1.4-3
Load Combinations

Load Combination Assumptions:

- Live load surcharge stabilizing loads (if applicable) are ignored for overturning and sliding analyses. Live load surcharge is used to compute maximum bearing pressure, wall strength and overall (global) stability.
- Minimum horizontal earth pressure ,$\gamma_{EH(min)}$ = 0.9, will not control in this example based on B/H and lateral load inclination, but should be checked.
- Vertical loads from vehicle collision need not be applied with transverse loads. By inspection, transverse loads will control Extreme Event Load Combination for this example.
- Component load factors shall remain consistent throughout calculations. For example, the active earth force resultant (F_T) can be broken into component forces of either $V_{10}\gamma_{EH(max)}$ and $H_2\gamma_{EH(max)}$ or $V_{10}\gamma_{EH(min)}$ and $H_2\gamma_{EH(min)}$, not $V_{10}\gamma_{EH(min)}$ and $H_2\gamma_{EH(max)}$.

The loads discussed and tabulated previously can now be factored by the appropriate load factors and combined to determine the governing limit states for each design check.

E14-1.4.4 Compute Factored Loads and Moments

Unfactored loads by load type (kip/ft)

$V_{DC} = V_1 + V_2 + V_3 + V_4 + V_6$ $\boxed{V_{DC} = 8.0}$

$V_{EV} = V_7 + V_8 + V_9$ $\boxed{V_{EV} = 9.7}$

$V_{LS} = V_{10}$ $\boxed{V_{LS} = 1.2}$

$V_{EH} = V_{11}$ $\boxed{V_{EH} = 2.7}$

$H_{LS} = H_1$ $\boxed{H_{LS} = 1.3}$

$H_{EH} = H_2$ $\boxed{H_{EH} = 6.3}$

Unfactored moments by load type (kip-ft/ft)

$M_{DC} = MV_1 + MV_2 + MV_3 + MV_4 + MV_6$ $\boxed{M_{DC} = 39.6}$

$M_{EV} = MV_7 + MV_8 + MV_9$ $\boxed{M_{EV} = 73.8}$

$M_{LS1} = MV_{10}$ $\boxed{M_{LS1} = 9.1}$

$M_{EH1} = MV_{11}$ $\boxed{M_{EH1} = 27.0}$

$M_{LS2} = MH_1$ $\boxed{M_{LS2} = 12.5}$

$M_{EH2} = MH_2$ $\boxed{M_{EH2} = 39.6}$

Factored vertical loads by limit state (kip/ft)

$V_Ia = n\left(0.90V_{DC} + 1.00V_{EV} + 0.00\ V_{LS} + 1.50\ V_{EH}\right)$ $\boxed{V_Ia = 20.9}$

$V_Ib = n\left(1.25V_{DC} + 1.35V_{EV} + 1.75\ V_{LS} + 1.50\ V_{EH}\right)$ $\boxed{V_Ib = 29.3}$

$V_Ser = n\left(1.00V_{DC} + 1.00V_{EV} + 1.00\ V_{LS} + 1.00\ V_{EH}\right)$ $\boxed{V_Ser = 21.6}$

Factored horizontal loads by limit state (kip/ft)

$H_Ia = n(1.75H_{LS} + 1.50H_{EH})$ $\boxed{H_Ia = 11.7}$

$H_Ib = n(1.75H_{LS} + 1.50H_{EH})$ $\boxed{H_Ib = 11.7}$

$H_Ser = n(1.00H_{LS} + 1.00H_{EH})$ $\boxed{H_Ser = 7.6}$

Factored moments produced by vertical Loads by limit state (kip-ft/ft)

$MV_Ia = n(0.90M_{DC} + 1.00M_{EV} + 0.00M_{LS1} + 1.50\ M_{EH1})$ $\boxed{MV_Ia = 150.0}$

$MV_Ib = n(1.25M_{DC} + 1.35M_{EV} + 1.75M_{LS1} + 1.50\ M_{EH1})$ $\boxed{MV_Ib = 205.8}$

$MV_Ser = n(1.00M_{DC} + 1.00M_{EV} + 1.00M_{LS1} + 1.00\ M_{EH1})$ $\boxed{MV_Ser = 149.6}$

Factored moments produced by horizontal loads by limit state (kip-ft/ft)

$MH_Ia = n(1.75M_{LS2} + 1.50\ M_{EH2})$ $\boxed{MH_Ia = 81.3}$

$MH_Ib = n(1.75M_{LS2} + 1.50\ M_{EH2})$ $\boxed{MH_Ib = 81.3}$

$MH_Ser = n(1.00M_{LS2} + 1.00\ M_{EH2})$ $\boxed{MH_Ser = 52.1}$

Load Combination	Vert. Loads V (kips/ft)	Moments MV (kip-kip/ft)	Horiz. Loads H (kips/ft)	Moments MH (kip-kip/ft)
Strength Ia	20.9	150.0	11.7	81.3
Strength Ib	29.3	205.8	11.7	81.3
Service I	21.6	149.6	7.6	52.1

Table E14-1.4-4
Summary of Factored Loads & Moments

E14-1.5 Compute Bearing Resistance, q_R

Nominal bearing resistance, q_n **LRFD [Eq 10.6.3.1.2a-1]**

$$q_n = c_{fd}\, N_{cm} + \gamma\, D_f\, N_{qm}\, C_{wq} + 0.5\, \gamma\, B'\, N_{\gamma m}\, C_{w\gamma}$$

Compute the resultant location (distance from Point 'O' Figure E14-4.4-3)

$\Sigma M_R = MV_Ib$ $\boxed{\Sigma M_R = 205.8}$ Summation of resisting moments for Strength Ib

$\Sigma M_O = MH_Ib$ $\boxed{\Sigma M_O = 81.3}$ Summation of overturning moments for Strength Ib

$\Sigma V = V_Ib$ $\boxed{\Sigma V = 29.3}$ Summation of vertical loads for Strength Ib

$$x = \frac{\Sigma M_R - \Sigma M_O}{\Sigma V}$$

Distance from Point "O" the resultant intersects the base $\boxed{x = 4.25}$ ft

Compute the wall eccentricity

$$e = \frac{B}{2} - x$$

$\boxed{e = 0.75}$ ft

Define the foundation layout

$B' = B - 2\,e$ Footing width $\boxed{B' = 8.5}$ ft

$L' = 90.0$ Footing length (Assumed) $\boxed{L' = 90.0}$ ft

$H' = H_Ib$ Summation of horizontal loads for Strength Ib $\boxed{H' = 11.7}$ kip/ft

$V' = V_Ib$ Summation of vertical loads for Strength Ib $\boxed{V' = 29.3}$ kip/ft

$D_f = 4.00$ Footing embedment

$\theta' = 90\text{deg}$ Direction of H' and V' resultant measured from wall backface **LRFD [Figure C10.6.3.1.2a-1]** $\boxed{\theta' = 90.0\ \text{deg}}$

Compute bearing capacity factors per **LRFD [Table 10.6.3.1.2a-1]**

$\phi_{fd} = 34.0$ deg $N_q = 29.4$ $N_c = 42.2$ $N_\gamma = 41.1$

Compute shape correction factors per **LRFD [Table 10.6.3.1.2a-3]**

Since the friction angle, ϕ_f, is > 0 the following equations are used:

$$s_c = 1 + \left(\frac{B'}{L'}\right)\left(\frac{N_q}{N_c}\right)$$

$\boxed{s_c = 1.07}$

$$s_q = 1 + \left(\frac{B'}{L'}\tan(\phi_{fd})\right)$$

$\boxed{s_q = 1.06}$

$$s_\gamma = 1 - 0.4\left(\frac{B'}{L'}\right)$$

$\boxed{s_\gamma = 0.96}$

Compute load inclination factors using **LRFD Equations [10.6.3.1.2a-5] thru [10.6.3.1.2a-9]**

$$n = \frac{2 + \frac{L'}{B'}}{1 + \frac{L'}{B'}} \cos(\theta')^2 + \frac{2 + \frac{B'}{L'}}{1 + \frac{B'}{L'}} \sin(\theta')^2$$ $\boxed{n = 1.91}$

$$i_q = \left(1 - \frac{H'}{V' + c_{fd}\, B'\, L' \frac{1}{\tan(\phi_{fd})}}\right)^n$$ $\boxed{i_q = 0.38}$

$$i_\gamma = \left(1 - \frac{H'}{V' + c_{fd}\, B'\, L' \frac{1}{\tan(\phi_{fd})}}\right)^{n+1}$$ $\boxed{i_\gamma = 0.23}$

$$i_c = i_q - \left(\frac{1 - i_q}{N_q - 1}\right)$$ For $\phi_{fd} > 0$: $\boxed{i_c = 0.36}$

Note: The use of load inclination factors shall be determined by the engineer.

Compute depth correction factor per **LRFD [Table 10.6.3.1.2a-4]**. While it can be assumed that the soils above the footing are as competent as beneath the footing, the depth correction factor is taken as 1.0 since D_f/B is less than 1.0.

$d_q = 1.00$

Determine coefficients C_{wq} and $C_{w\gamma}$ assuming that the water depth is greater than 1.5 times the footing base plus the embedment depth per **LRFD [Table 10.6.3.1.2a-2]**

$C_{wq} = 1.0$ where $D_w > 1.5B + D_f$

$C_{w\gamma} = 1.0$ where $D_w > 1.5B + D_f$

Compute modified bearing capacity factors
LRFD [Equation 10.6.3.1.2a-2 to 10.6.3.1.2a-4]

$N_{cm} = N_c\, s_c\, i_c$ $\boxed{N_{cm} = 16.0}$

$N_{qm} = N_q\, s_q\, d_q\, i_q$ $\boxed{N_{qm} = 11.8}$

$N_{\gamma m} = N_\gamma\, s_\gamma\, i_\gamma$ $\boxed{N_{\gamma m} = 9.0}$

Compute nominal bearing resistance, q_n, **LRFD [Eq 10.6.3.1.2a-1]**

$q_n = c_{fd}\, N_{cm} + \gamma_{fd}\, D_f\, N_{qm}\, C_{wq} + 0.5\, \gamma_{fd}\, B'\, N_{\gamma m}\, C_{w\gamma}$ $\boxed{q_n = 10.25}$ ksf/ft

Compute factored bearing resistance, q_R, **LRFD [Eq 10.6.3.1.1]**

$\phi_b = 0.55$

$q_R = \phi_b\, q_n$ $\boxed{q_R = 5.64}$ ksf/ft

E14-1.6 Evaluate External Stability of Wall

Three potential external failure mechanisms will be considered in this example. These failures include bearing, limiting eccentricity and sliding. Global (overall) stability requirements are assumed to have been satisfied in prior calculations. Design calculations will be carried out for the governing limit states only.

E14-1.6.1 Bearing Resistance at Base of the Wall

The following calculations are based on **Strength Ib**:

Compute resultant location (distance from Point 'O' Figure E14-1.4-3)

$\Sigma M_R = MV_Ib$ $\quad \Sigma M_R = 205.8$ kip-ft/ft

$\Sigma M_O = MH_Ib$ $\quad \Sigma M_O = 81.3$ kip-ft/ft

$\Sigma V = V_Ib$ $\quad \Sigma V = 29.3$ kip/ft

$$x = \frac{\Sigma M_R - \Sigma M_O}{\Sigma V}$$

Distance from Point "O" the resultant intersects the base

$\boxed{x = 4.25}$ ft

Compute the wall eccentricity

$$e = \frac{B}{2} - x$$

$\boxed{e = 0.75}$ ft

Note: The vertical stress is assumed to be uniformly distributed over the effective bearing width, B', since the wall is supported by a soil foundation **LRFD [11.6.3.2]**. The effective bearing width is equal to B-2e. When the foundation eccentricity is negative the actual bearing width, B, will be used.

Compute the ultimate bearing stress

$$\sigma_V = \frac{\Sigma V}{B - 2\,e}$$

$\boxed{\sigma_V = 3.44}$ ksf/ft

Factored bearing resistance

$\boxed{q_R = 5.64}$ ksf/ft

<u>Capacity:Demand Ratio (CDR)</u>

$$CDR_{Bearing1} = \frac{q_R}{\sigma_V}$$

$\boxed{CDR_{Bearing1} = 1.64}$

Is the $CDR \geq 1.0$?

$\boxed{check = \text{"OK"}}$

E14-1.6.2 Limiting Eccentricity at Base of the Wall

The location of the resultant of the reaction forces is limited to the middle two-thirds o base width for a soil foundation (i.e., e_{max} = B/3). The following calculations are base

Strength Ia:

Maximum eccentricity

$$e_{max} = \frac{B}{3}$$

$e_{max} = 3.33$ ft

Compute resultant location (distance from Point 'O' Figure E14-1.4.3)

$\Sigma M_R = MV_Ia$ $\Sigma M_R = 150.0$ kip-ft/ft

$\Sigma M_O = MH_Ia$ $\Sigma M_O = 81.3$ kip-ft/ft

$\Sigma V = V_Ia$ $\Sigma V = 20.9$ kip/ft

$$x = \frac{\Sigma M_R - \Sigma M_O}{\Sigma V}$$

Distance from Point "O" the resultant intersects the base

$x = 3.29$ ft

Compute the wall eccentricity

$$e = \frac{B}{2} - x$$

$e = 1.71$ ft

<u>Capacity:Demand Ratio (CDR)</u>

$$CDR_{Eccentricity1} = \frac{e_{max}}{e}$$

$CDR_{Eccentricity1} = 1.94$

Is the $CDR \geq 1.0$?

check = "OK"

E14-1.6.3 Sliding Resistance at Base of the Wall

For sliding failure, the horizontal force effects, R_u, is checked against the sliding resistance, R_R, where $R_R=\phi R_n$ **LRFD [10.6.3.4]**. If sliding resistance is not adequate a shear key will be investigated. The following calculations are based on **Strength Ia**:

Factored Sliding Force, R_u

$R_u = H_Ia$ $\boxed{R_u = 11.7}$ kip/ft

Sliding Resistance, R_R

$$R_R = \phi_s R_n = \phi_\tau R_\tau + \phi_{ep} R_{ep}$$

Compute sliding resistance between soil and foundation, $\phi_\tau R_\tau$

$\Sigma V = V_Ia$ $\boxed{\Sigma V = 20.9}$ kip/ft

$R_\tau = \Sigma V \tan(\phi_{fd})$ $\boxed{R_\tau = 14.1}$ kip/ft

$\phi_\tau = 1.00$ $\boxed{\phi_\tau R_\tau = 14.1}$ kip/ft

Compute passive resistance throughout the design life of the wall, $\phi_{ep} R_{ep}$

$r_{ep1} = k_p \gamma_{fd} y_1$ Nominal passive pressure at y_1 $\boxed{r_{ep1} = 1.70}$ kip/ft

$r_{ep2} = k_p \gamma_{fd} y_2$ Nominal passive pressure at y_2 $\boxed{r_{ep2} = 2.12}$ kip/ft

$R_{ep} = \dfrac{r_{ep1} + r_{ep2}}{2}(y_2 - y_1)$ $\boxed{R_{ep} = 1.9}$ kip/ft

$\phi_{ep} = 0.50$ $\boxed{\phi_{ep} R_{ep} = 1.0}$ kip/ft

Compute nominal resistance against failure by sliding, R_n

$R_n = \phi_\tau R_\tau + \phi_{ep} R_{ep}$ $\boxed{R_n = 15.1}$ kip/ft

Compute factored resistance against failure by sliding, R_R

$\phi_s = 1.00$

$R_R = \phi_s R_n$ $\boxed{R_R = 15.1}$ kip/ft

<u>Capacity:Demand Ratio (CDR)</u>

$CDR_{Sliding1} = \dfrac{R_R}{R_u}$ $\boxed{CDR_{Sliding1} = 1.29}$

Is the $CDR \geq 1.0$? $\boxed{check = \text{"OK"}}$

E14-1.7 Evaluate Wall Structural Design

Note: CIP concrete walls are a non-proprietary wall system and the structural design computations shall be performed by the wall designer.

Wall structural design computations for shear and flexure will be considered in this example. The critical sections for flexure are taken at the front, back and bottom of them stem. For simplicity, critical sections for shear will be taken at the critical sections used for flexsure. In actuality, the toe and stem may be designed for shear at the effective depth away from the face. Crack control and temperature and shrinkage considerations will also be included.

E14-1.7.1 Evaluate Heel Strength

Analyze heel requirements.

E14-1.7.1.1 Evaluate Heel Shear Strength

For **Strength Ib**:

$$V_u = 1.25\left(\frac{C}{B}V_4 + V_6\right) + 1.35\left(V_7 + V_8 + V_9\right) + 1.75\left(V_{10}\right) + 1.50\left(V_{11}\right)$$

$\boxed{V_u = 21.9}$ kip/ft

Nominal shear resistance, V_n, is taken as the lesser of V_{n1} and V_{n2} **LRFD [5.8.3.3]**

$V_{n1} = V_c$ **LRFD [Eq 5.8.3.3-1]**

where: $V_c = 0.0316\ \beta\lambda\sqrt{f'_c}\ b_v\ d_v$

$V_{n2} = 0.25\ f'_c\ b_v\ d_v$ **LRFD [Eq 5.8.3.3-2]**

Compute the shear resistance due to concrete, V_c:

cover = 2.0 in

s = 7.0 in (bar spacing)

$Bar_{No} = 6$ (transverse bar size)

$Bar_D = 0.750$ in (transverse bar diameter)

$Bar_A = 0.440$ in^2 (transverse bar area)

$\alpha_1 = 0.85$ (for $f'_c \leq 10.0$ ksi) **LRFD [5.7.2.2]**

$$A_s = \frac{Bar_A}{\frac{s}{12}}$$

$\boxed{A_s = 0.75}$ in^2/ft

$$d_s = D\ 12 - cover - \frac{Bar_D}{2}$$

$\boxed{d_s = 21.6}$ in

$$a = \frac{A_s\ f_y}{\alpha_1\ f'_c\ b}$$

$\boxed{a = 1.3}$ in

$d_{v1} = d_s - \frac{a}{2}$ $\boxed{d_{v1} = 21.0}$ in

$d_{v2} = 0.9\ d_s$ $\boxed{d_{v2} = 19.5}$ in

$d_{v3} = 0.72\ D\ 12$ $\boxed{d_{v3} = 17.3}$ in

$d_v = \max(d_{v1}, d_{v2}, d_{v3})$ $\boxed{d_v = 21.0}$ in

Nominal shear resistance, V_n, is taken as the lesser of V_{n1} and V_{n2}

$\beta = 2.0$ λ = 1.0 (normal wgt. conc.) **LRFD [5.4.2.8]**

$V_c = 0.0316\ \beta\ \lambda \sqrt{f'_c}\ b\ d_v$ $\boxed{V_c = 29.8}$ kip/ft

$V_{n1} = V_c$ $\boxed{V_{n1} = 29.8}$ kip/ft

$V_{n2} = 0.25\ f'_c\ b\ d_v$ $\boxed{V_{n2} = 220.4}$ kip/ft

$V_n = \min(V_{n1}, V_{n2})$ $\boxed{V_n = 29.8}$ kip/ft

$V_r = \phi_v\ V_n$ $\boxed{V_r = 26.8}$ kip/ft

$\boxed{V_u = 21.9}$ kip/ft

Is V_u less than V_r? $\boxed{\text{check} = \text{"OK"}}$

E14-1.7.1.2 Evaluate Heel Flexural Strength

$V_u = 21.9$ kip/ft

$M_u = V_u \frac{C}{2}$ $\boxed{M_u = 47.9}$ kip-ft/ft

Calculated the capacity of the heel in flexure at the face of the stem:

$M_n = A_s\ f_y \left(d_s - \frac{a}{2}\right) \frac{1}{12}$ $\boxed{M_n = 79.2}$ kip-ft/ft

Calculate the flexural resistance factor ϕ_F:

$\beta_1 = 0.85$

$c = \frac{a}{\beta_1}$ $\boxed{c = 1.49}$ in

$$\phi_F = \begin{cases} 0.75 & \text{if } \frac{d_s}{c} < \frac{5}{3} \\ 0.65 + 0.15\left(\frac{d_s}{c} - 1\right) & \text{if } \frac{5}{3} \le \frac{d_s}{c} \le \frac{8}{3} \\ 0.90 & \text{otherwise} \end{cases}$$

$\boxed{\phi_F = 0.90}$

based on f_y = 60 ksi, **LRFD [5.5.4.2.1], [Table C5.7.2.1-1]**

Note: if $\phi_F = 0.75$ Section is compression-controlled
if $0.75 < \phi_F < 0.90$ Section is in transition
if $\phi_F = 0.90$ Section is tension-controlled

Calculate the flexural factored resistance, M_r:

$M_r = \phi_F M_n$ $\boxed{M_r = 71.2}$ kip-ft/ft

$\boxed{M_u = 47.9}$ kip-ft/ft

Is M_u less than M_r? $\boxed{\text{check} = \text{"OK"}}$

Check the minimum reinforcement limits in accordance with **LRFD [5.7.3.3.2]**:

$f_r = 0.24\,\lambda\sqrt{f'_c}$ = modulus of rupture (ksi) **LRFD [5.4.2.6]**

$f_r = 0.24\sqrt{f'_c}$ λ = 1.0 (normal wgt. conc.) **LRFD [5.4.2.8]** $\boxed{f_r = 0.449}$ ksi

$I_g = \frac{1}{12}\, b\,(D\ 12)^3$ $\boxed{I_g = 13824}$ in^4

$y_t = \frac{1}{2}\, D\ 12$ $\boxed{y_t = 12.00}$ in

$S_c = \frac{I_g}{y_t}$ $\boxed{S_c = 1152}$ in^3

$M_{cr} = \gamma_3(\gamma_1 f_r)\, S_c$ therefore, $M_{cr} = 1.1\, f_r\, S_c$

Where:

$\gamma_1 = 1.6$ flexural cracking variability factor

$\gamma_3 = 0.67$ ratio of specified minimum yield strength to ultimate tensile strength of the reinforcement <u>for A615, Grade 60 reinforcement</u>

$M_{cr} = 1.1\, f_r\, S_c\, \frac{1}{12}$ $\boxed{M_{cr} = 47.4}$ kip-ft/ft

$1.33\ M_u = 63.7$ kip-ft/ft

Is M_r greater than the lesser value of M_{cr} and $1.33*M_u$? check = "OK"

E14-1.7.2 Evaluate Toe Strength

The structural design of the footing toe is calculated using a linear contact stress distribution for bearing for all soil and rock conditions.

E14-1.7.2.1 Evaluate Toe Shear Strength

For **Strength Ib**:

$\Sigma M_R = MV_Ib$ $\Sigma M_R = 205.8$ kip-ft/ft

$\Sigma M_O = MH_Ib$ $\Sigma M_O = 81.3$ kip-ft/ft

$\Sigma V = V_Ib$ $\Sigma V = 29.3$ kip/ft

$$x = \frac{\Sigma M_R - \Sigma M_O}{\Sigma V}$$ $x = 4.3$ ft

$$e = \max\left(0, \frac{B}{2} - x\right)$$ $e = 0.75$ ft

$$\sigma_{max} = \frac{\Sigma V}{B}\left(1 + 6\frac{e}{B}\right)$$ $\sigma_{max} = 4.24$ ksf/ft

$$\sigma_{min} = \frac{\Sigma V}{B}\left(1 - 6\frac{e}{B}\right)$$ $\sigma_{min} = 1.62$ ksf/ft

Calculate the average stress on the toe

$$\sigma_V = \frac{\sigma_{max} + \left[\sigma_{min} + \frac{B - A}{B}\left(\sigma_{max} - \sigma_{min}\right)\right]}{2}$$ $\sigma_V = 3.78$ ksf/ft

$$V_u = \sigma_V A$$ $V_u = 13.2$ kip/ft

Nominal shear resistance, V_n, is taken as the lesser of V_{n1} and V_{n2} **LRFD [5.8.3.3]**

$V_{n1} = V_c$ **LRFD [Eq 5.8.3.3-1]**

in which: $V_c = 0.0316\ \beta\lambda\sqrt{f'_c}\ b_V\ d_V$

$V_{n2} = 0.25\ f'_c\ b_v\ d_v$ **LRFD [Eq 5.8.3.3-2]**

Design footing toe for shear

$cover = 3.0$ in

$s = 9.0$ in (bar spacing)

$Bar_{No} = 5$ (transverse bar size)

$Bar_D = 0.63$ in (transverse bar diameter)

$Bar_A = 0.31$ in^2 (transverse bar area)

$$A_s = \frac{Bar_A}{\frac{s}{12}}$$ $A_s = 0.41$ in^2/ft

$$d_s = D\ 12 - cover - \frac{Bar_D}{2}$$ $d_s = 20.7$ in

$$a = \frac{A_s\ f_y}{\alpha_1\ f'_c\ b}$$ $a = 0.7$ in

$$d_{v1} = d_s - \frac{a}{2}$$ $d_{v1} = 20.3$ in

$$d_{v2} = 0.9\ d_s$$ $d_{v2} = 18.6$ in

$$d_{v3} = 0.72\ D\ 12$$ $d_{v3} = 17.3$ in

$$d_v = \max(d_{v1}, d_{v2}, d_{v3})$$ $d_v = 20.3$ in

Nominal shear resistance, V_n, is taken as the lesser of V_{n1} and V_{n2}

$\beta = 2.0$ λ = 1.0 (normal wgt. conc.) **LRFD [5.4.2.8]**

$$V_c = 0.0316\ \beta\ \lambda\sqrt{f'_c}\ b\ d_v$$ $V_c = 28.9$ kip/ft

$$V_{n1} = V_c$$ $V_{n1} = 28.9$ kip/ft

$$V_{n2} = 0.25\ f'_c\ b\ d_v$$ $V_{n2} = 213.6$ kip/ft

$$V_n = \min(V_{n1}, V_{n2})$$ $V_n = 28.9$ kip/ft

$$V_r = \phi_v\ V_n$$ $V_r = 26.0$ kip/ft

$V_u = 13.2$ kip/ft

Is V_u less than V_r? check = "OK"

E14-1.7.2.2 Evaluate Toe Flexural Strength

$V_u = 13.2$ kip/ft

$M_u = V_u \frac{A}{2}$ $\boxed{M_u = 23.2}$ kip-ft/ft

Calculated the capacity of the toe in flexure at the face of the stem:

$M_n = A_s f_y \left(d_s - \frac{a}{2}\right) \frac{1}{12}$ $\boxed{M_n = 42.0}$ kip-ft/ft

Calculate the flexural resistance factor ϕ_F:

$\beta_1 = 0.85$

$c = \frac{a}{\beta_1}$ $\boxed{c = 0.82}$ in

$$\phi_F = \begin{cases} 0.75 & \text{if } \frac{d_s}{c} < \frac{5}{3} \\ 0.65 + 0.15\left(\frac{d_s}{c} - 1\right) & \text{if } \frac{5}{3} \le \frac{d_s}{c} \le \frac{8}{3} \\ 0.90 & \text{otherwise} \end{cases}$$

$\boxed{\phi_F = 0.90}$

based on f_y = 60 ksi, **LRFD [5.5.4.2.1], [Table C5.7.2.1-1]**

Calculate the flexural factored resistance, M_r:

$M_r = \phi_F M_n$ $\boxed{M_r = 37.8}$ kip-ft/ft

Is M_u less than M_r? $\boxed{\text{check} = \text{"OK"}}$

Check the minimum reinforcement limits in accordance with **LRFD [5.7.3.3.2]**:

$f_r = 0.24\,\lambda\sqrt{f'_c}$ = modulus of rupture (ksi) **LRFD [5.4.2.6]**

$f_r = 0.24\sqrt{f'_c}$ λ = 1.0 (normal wgt. conc.) **LRFD [5.4.2.8]** $\boxed{f_r = 0.449}$ ksi

$I_g = \frac{1}{12} b\,(D\ 12)^3$ $\boxed{I_g = 13824}$ in^4

$y_t = \frac{1}{2} D\ 12$ $\boxed{y_t = 12.00}$ in

$S_c = \frac{I_g}{y_t}$ $\boxed{S_c = 1152}$ in^3

$M_{cr} = 1.1\ f_r\ S_c\ \frac{1}{12}$ from E14-1.7.1.2 $M_{cr} = 47.4$ kip-ft/ft

$1.33\ M_u = 30.8$ kip-ft/ft

Is M_r greater than the lesser value of M_{cr} and $1.33*M_u$?

check = "OK"

E14-1.7.3 Evaluate Stem Strength

Unfactored Stem Horizontal Loads and Moments:

$H_1 = \gamma_f\ h_{eq}\ (h' - t)\ k_a \cos(90\ \text{deg} - \theta + \delta)$ $H_1 = 1.2$ kip/ft

$H_2 = \frac{1}{2}\ \gamma_f\ (h' - t)^2\ k_a \cos(90\ \text{deg} - \theta + \delta)$ $H_2 = 5.0$ kip/ft

$M_1 = H_1 \left(\frac{h' - t}{2}\right)$ $M_1 = 10.0$ kip-ft/ft

$M_2 = H_2 \left(\frac{h' - t}{3}\right)$ $M_2 = 28.4$ kip-ft/ft

Factored Stem Horizontal Loads and Moments:

for **Strength Ib**:

$H_{u1} = 1.75\ H_1 + 1.50\ H_2$ $H_{u1} = 9.6$ kip/ft

$M_{u1} = 1.75\ M_1 + 1.50\ M_2$ $M_{u1} = 60.0$ kip-ft/ft

for **Service I**:

$H_{u3} = 1.00\ H_1 + 1.00\ H_2$ $H_{u3} = 6.2$ kip/ft

$M_{u3} = 1.00\ M_1 + 1.00\ M_2$ $M_{u3} = 38.4$ kip-ft/ft

E14-1.7.3.1 Evaluate Stem Shear Strength at Footing

$V_u = H_{u1}$ $V_u = 9.6$ kip/ft

Nominal shear resistance, V_n, is taken as the lesser of V_{n1} and V_{n2} **LRFD [5.8.3.3]**

$V_{n1} = V_c$ **LRFD [Eq 5.8.3.3-1]**

where: $V_c = 0.0316\ \beta \lambda \sqrt{f'_c}\ b_v\ d_v$

$V_{n2} = 0.25\ f'_c\ b_v\ d_v$ **LRFD [Eq 5.8.3.3-2]**

Compute the shear resistance due to concrete, V_c:

$cover = 2.0$ in

$s = 10.0$ in (bar spacing)

$Bar_{No} = 8$ (transverse bar size)

$Bar_D = 1.00$ in (transverse bar diameter)

$Bar_A = 0.79$ in^2 (transverse bar area)

$$A_s = \frac{Bar_A}{\frac{s}{12}}$$ $A_s = 0.95$ in^2/ft

$$d_s = T_b\ 12 - cover - \frac{Bar_D}{2}$$ $d_s = 23.0$ in

$$a = \frac{A_s\ f_y}{\alpha_1\ f'_c\ b}$$ $a = 1.6$ in

$$d_{v1} = d_s - \frac{a}{2}$$ $d_{v1} = 22.2$ in

$$d_{v2} = 0.9\ d_s$$ $d_{v2} = 20.7$ in

$$d_{v3} = 0.72\ T_b\ 12$$ $d_{v3} = 18.4$ in

$$d_v = \max(d_{v1}, d_{v2}, d_{v3})$$ $d_v = 22.2$ in

Nominal shear resistance, V_n, is taken as the lesser of V_{n1} and V_{n2}

$\beta = 2.0$ $\lambda = 1.0$ (normal wgt. conc.) **LRFD [5.4.2.8]**

$$V_c = 0.0316\ \beta\ \lambda\sqrt{f'_c}\ b\ d_v$$ $V_c = 31.5$ kip/ft

$$V_{n1} = V_c$$ $V_{n1} = 31.5$ kip/ft

$$V_{n2} = 0.25\ f'_c\ b\ d_v$$ $V_{n2} = 233.1$ kip/ft

$$V_n = \min(V_{n1}, V_{n2})$$ $V_n = 31.5$ kip/ft

$$V_r = \phi_v\ V_n$$ $V_r = 28.4$ kip/ft

$V_u = 9.6$ kip/ft

Is V_u less than V_r? $\boxed{\text{check} = \text{"OK"}}$

E14-1.7.3.2 Evaluate Stem Flexural Strength at Footing

$M_u = M_{u1}$ $\boxed{M_u = 60.0}$ kip-ft/ft

Calculate the capacity of the stem in flexure at the face of the footing:

$$M_n = A_s f_y \left(d_s - \frac{a}{2}\right) \frac{1}{12}$$ $\boxed{M_n = 105.2}$ kip-ft/ft

Calculate the flexural resistance factor ϕ_F:

$$\beta_1 = 0.85$$

$$c = \frac{a}{\beta_1}$$ $\boxed{c = 1.87}$ in

$$\phi_F = \begin{cases} 0.75 & \text{if } \frac{d_s}{c} < \frac{5}{3} \\ 0.65 + 0.15\left(\frac{d_s}{c} - 1\right) & \text{if } \frac{5}{3} \le \frac{d_s}{c} \le \frac{8}{3} \\ 0.90 & \text{otherwise} \end{cases}$$

$\boxed{\phi_F = 0.90}$

based on f_y = 60 ksi, **LRFD [5.5.4.2.1], [Table C5.7.2.1-1]**

Calculate the flexural factored resistance, M_r:

$$M_r = \phi_F M_n$$ $\boxed{M_r = 94.7}$ kip-ft/ft

$\boxed{M_u = 60.0}$ kip-ft/ft

Is M_u less than M_r? $\boxed{\text{check} = \text{"OK"}}$

Check the minimum reinforcement limits in accordance with **LRFD [5.7.3.3.2]**:

$f_r = 0.24\,\lambda\sqrt{f'_c}$ = modulus of rupture (ksi) **LRFD [5.4.2.6]**

$f_r = 0.24\sqrt{f'_c}$ λ = 1.0 (normal wgt. conc.) **LRFD [5.4.2.8]** $\boxed{f_r = 0.45}$ ksi

$$I_g = \frac{1}{12} b \left(T_b\ 12\right)^3$$ $\boxed{I_g = 16581}$ in^4

$$y_t = \frac{1}{2} T_b\ 12$$ $\boxed{y_t = 12.8}$ in

$$S_c = \frac{I_g}{y_t}$$ $\boxed{S_c = 1301}$ in^3

$M_{cr_s} = 1.1\ f_r\ S_c\ \frac{1}{12}$ from E14-1.7.1.2 $M_{cr_s} = 53.5$ kip-ft/ft

$1.33\ M_u = 79.9$ kip-ft/ft

Is M_r greater than the lesser value of M_{cr} and $1.33*M_u$? check = "OK"

Check the Service Ib crack control requirements in accordance with **LRFD [5.7.3.4]**

$\rho = \frac{A_s}{d_s\ b}$ $\rho = 0.00343$

$n = \frac{E_s}{E_c}$ $n = 8.09$

$k = \sqrt{(\rho\ n)^2 + 2\ \rho\ n} - \rho\ n$ $k = 0.210$

$j = 1 - \frac{k}{3}$ $j = 0.930$

$d_c = \text{cover} + \frac{Bar_D}{2}$ $d_c = 2.5$ in

$f_{ss} = \frac{M_{u3}}{A_s\ j\ d_s}\ 12 \le 0.6\ f_y$ $f_{ss} = 22.7$ ksi $\le 0.6\ f_y$ O.K.

$h = T_b\ 12$

$\beta_s = 1 + \frac{d_c}{0.7\ (h - d_c)}$ $\beta_s = 1.2$

$\gamma_e = 1.0$ for Class 1 exposure

$s_{max} = \frac{700\ \gamma_e}{\beta_s\ f_{ss}} - 2\ d_c$ $s_{max} = 21.7$ in

$s = 10.0$ in

Is the bar spacing less than s_{max}? check = "OK"

E14-1.7.3.3 Transfer of Force at Base of Stem

Specification requires that the transfer of lateral forces from the stem to the footing be in accordance with the shear-transfer provisions of **LRFD [5.8.4]**. That calculation will not be presented. Refer to E13-1.9.3 for a similar computation.

E14-1.7.4 Temperature and Shrinkage Steel

Look at temperature and shrinkage requirements

E14-1.7.4.1 Temperature and Shrinkage Steel for Footing

The footing will not be exposed to daily temperature changes. Thus temperature and shrinkage steel is not required. However, #4 bars at 18" o.c. (max) are placed longitudinally to serve as spacers.

E14-1.7.4.2 Temperature and Shrinkage Steel of Stem

The stem will be exposed to daily temperature changes. In accordance with **LRFD [5.10.8** the stem shall provide temperature and shrinkage steel on each face and in each direction as calculated below:

$s = 18.0$ in (bar spacing)

$Bar_{No} = 4$ (bar size)

$Bar_D = 0.50$ in (temperature and shrinkage bar diameter)

$Bar_A = 0.20$ in^2 (temperature and shrinkage bar area)

$$A_s = \frac{Bar_A}{\frac{s}{12}}$$ (temperature and shrinkage provided)

$A_s = 0.13$ in^2/ft

$b_s = (H - D)\ 12$ least width of stem $b_s = 216.0$ in

$h_s = T_t\ 12$ least thickness of stem $h_s = 12.0$ in

$$A_{ts} = \frac{1.3\ b_s\ h_s}{2\left(b_s + h_s\right) f_y}$$ Area of reinforcement per foot, on each face and in each direction $A_{ts} = 0.12$ in^2/ft

Is $0.11 \le A_s \le 0.60$? check = "OK"

Is $A_s > A_{ts}$? check = "OK"

Check the maximum spacing requirements

$s_1 = \min(3\ h_s, 18)$ $\boxed{s_1 = 18.0}$ in

$s_2 = \begin{cases} 12 & \text{if } h_s > 18 \\ s_1 & \text{otherwise} \end{cases}$ For walls and footings (in) $\boxed{s_2 = 18.0}$ in

$s_{max} = \min(s_1, s_2)$ $\boxed{s_{max} = 18.0}$ in

Is the bar spacing less than s_{max}? $\boxed{\text{check} = \text{"OK"}}$

E14-1.8 Summary of Results

List all summaries.

E14-1.8.1 Summary of External Stability

Based on the defined project parameters the following external stability checks have been satisfied:

External Check	CDR
	Strength
Sliding	1.29
Eccentricity	1.94
Bearing	1.64

Table E14-1.8-1
Summary of External Stability Computations

E14-1.8.2 Summary of Wall Strength Design

The required wall reinforcing from the previous computations are presented in Figure E14-1.9-1.

E14-1.8.3 Drainage Design

Drainage requirements shall be investigated and detailed accordingly. In this example drainage requirements are met by providing granular, free draining backfill material with a pipe underdrain located at the bottom of the wall (Assumed wall is adjacent to sidewalk) as shown in Figure E14-1.9-1.

E14-1.9 Final CIP Concrete Wall Schematic

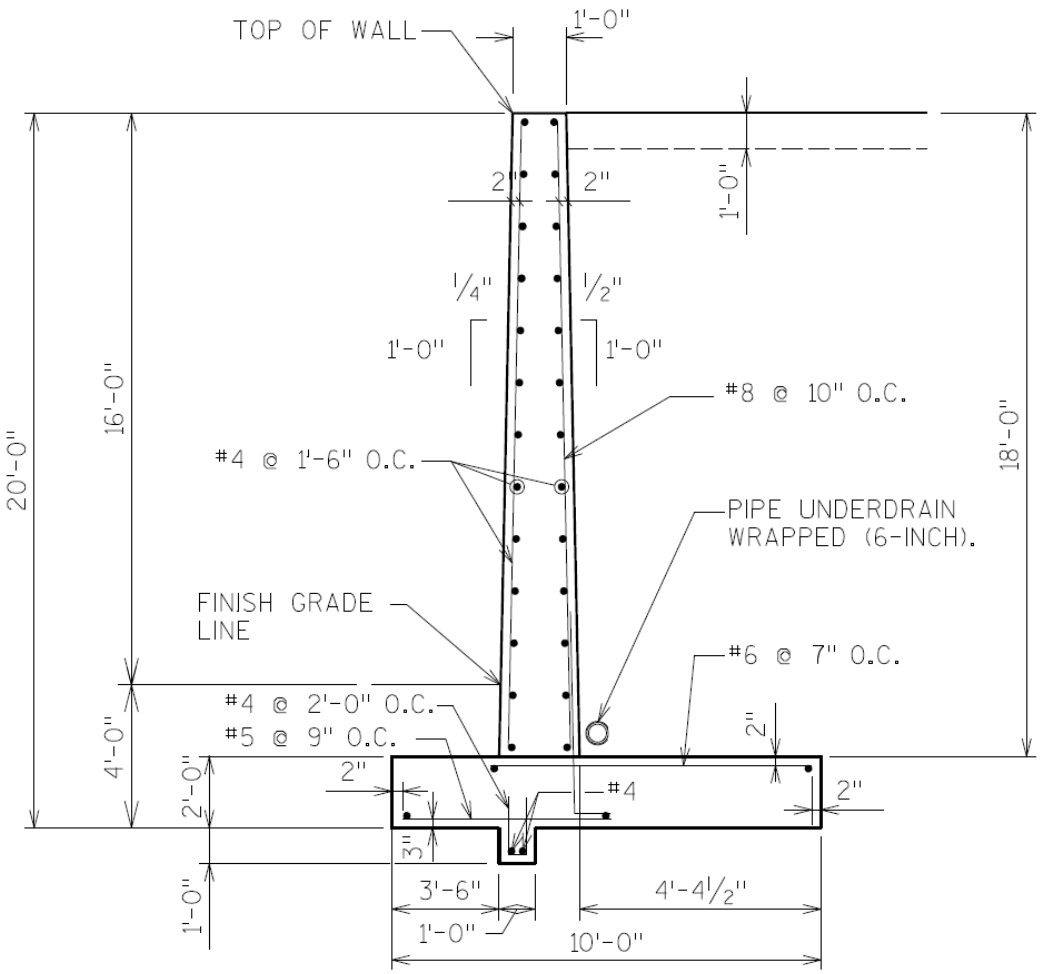

Figure E14-1.9-1
Cast-In-Place Wall Schematic

Table of Contents

E14-2 Precast Panel Steel Reinforced MSE Wall, LRFD 2
E14-2.1 Establish Project Requirements 2
E14-2.2 Design Parameters 3
E14-2.3 Estimate Depth of Embedment and Length of Reinforcement 5
E14-2.4 Permanent and Transient Loads 6
E14-2.4.1 Compute Active Earth Pressure 6
E14-2.4.2 Compute Unfactored Loads 7
E14-2.4.3 Summarize Applicable Load and Resistance Factors 9
E14-2.4.3 Compute Factored Loads and Moments 10
E14-2.5 Evaluate External Stability of MSE Wall 11
E14-2.5.1 Sliding Resistance at Base of MSE Wall 11
E14-2.5.2 Limiting Eccentricity at Base of MSE Wall 12
E14-2.5.3 Bearing Resistance at base of MSE Wall 13
E14-2.6 Evaluate Internal Stability of MSE Wall 14
E14-2.6.1 Establish the Vertical Layout of Soil Reinforcement 15
E14-2.6.2 Compute Horizontal Stress and Maximum Tension, Tmax 16
E14-2.6.3 Establish Nominal and Factored Pullout Resistance of Soil Reinforcement 18
E14-2.6.4 Establish Nominal and Factored Long-term Tensile Resistance of Soil Reinforcement 20
E14-2.6.5 Establish Number of Soil Reinforcing Strips at Z 21
E14-2.7 Summary of Results E14-2.7.1 Summary of External Stability 22
E14-2.7 Summary of Results E14-2.7.1 Summary of External Stability 22
E14-2.7.2 Summary of Internal Stability 22
E14-2.7.3 Element Facings and Drainage Design 23
E14-2.8 Final MSE Wall Schematic 23

E14-2 Precast Panel Steel Reinforced MSE Wall, LRFD

General

This example shows design calculations for MSE wall with precast concrete panel facings conforming to the LRFD Bridge Design Specifications and the WisDOT Bridge Manual. *(Example is current through LRFD Fifth Edition - 2010)*

Sample design calculations for external stability (sliding, eccentricity and bearing) and internal stability (soil reinforcement stress and pullout) will be presented. The overall stability and settlement calculations will not be shown in this example, but are required.

Design steps presented in 14.6.3.3 are used for the wall design.

E14-2.1 Establish Project Requirements

The following MSE wall shall have compacted freely draining soil in the reinforced zone and will be reinforced with metallic (inextensible) strips as shown in Figure E14-2.1-1. External stability is the designer's (WisDOT/Consultant) responsibility and internal stability and structural components are the contractors responsibility.

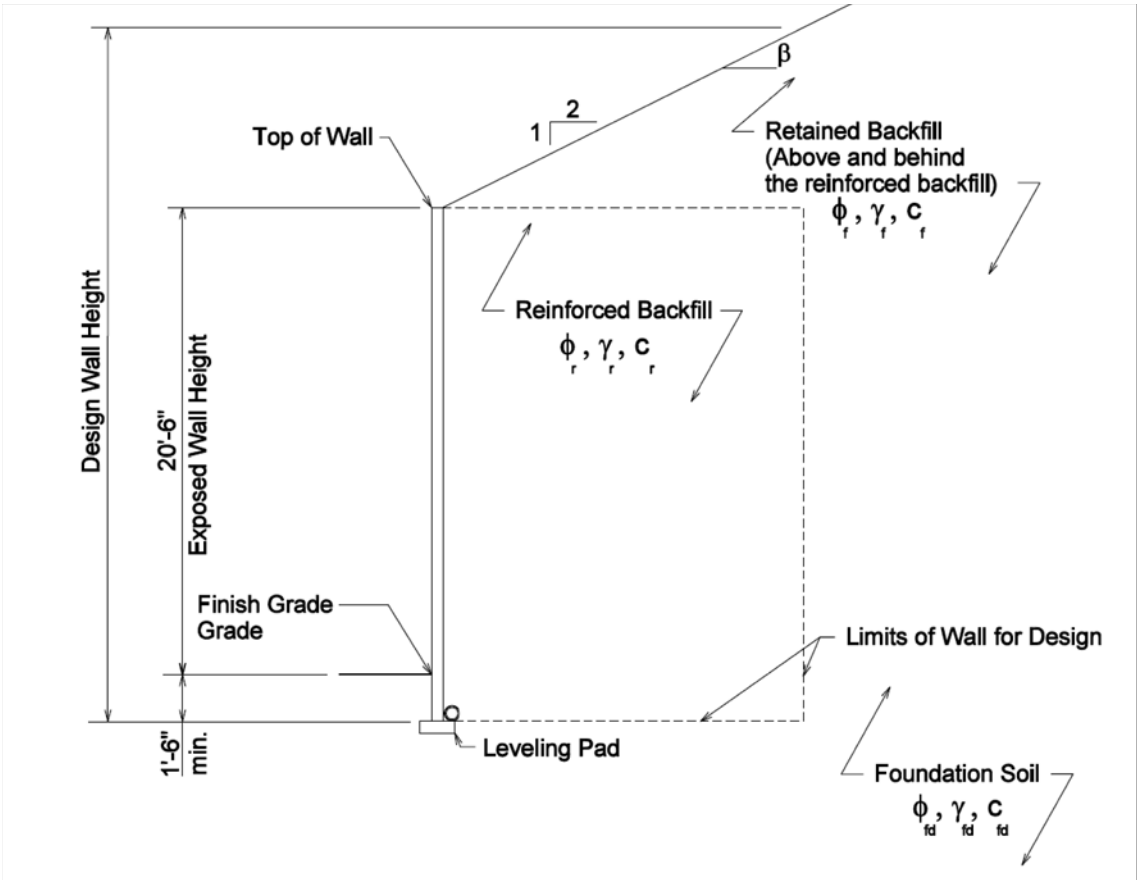

Figure E14-2.1-1
MSE Wall with Sloping Backfill

Wall Geometry

$H_e = 20.5$ Exposed wall height, ft

$H = H_e + 1.5$ Design wall height, ft (assume 1.5 ft wall embedment)

$\theta = 90\ deg$ Angle of back face of wall to horizontal

$\beta = 26.565\ deg$ Inclination of ground slope behind face of wall (2H:1V)

E14-2.2 Design Parameters

Project Parameters

$Design_Life = 75$ Wall design life, years (min) **LRFD [11.5.1]**

Soil Properties (From Geotechnical Site Investigation Report)

Designer to determine if long-term or short-term soil strength parameters govern external stability.

Reinforced Backfill Soil Design Parameters

$\phi_r = 30\ deg$ Angle of internal friction **LRFD [11.10.5.1]**

$\gamma_r = 0.120$ Unit of weight, kcf

$c_r = 0$ Cohesion, psf

Retained Backfill Soil Design Parameters

$\phi_f = 29\ deg$ Angle of internal friction

$\gamma_f = 0.120$ Unit of weight, kcf

$c_f = 0$ Cohesion, psf

Foundation Soil Design Parameters

$\phi_{fd} = 31 deg$ Angle of internal friction

$\gamma_{fd} = 0.125$ Unit of weight, kcf

$c_{fd} = 0$ Cohesion, psf

Factored Bearing Resistance of Foundation Soil

$q_R = 10.0$ Factored resistance at the strength limit state, ksf

Note: The factored bearings resistance, q_R, was assumed to be given in the Site Investigation Report. If not provided q_R shall be determined by calculating the nominal bearing resistance, q_n, per **LRFD [Eq 10.6.3.1.2a-1]** and factored with the bearing resistance factor, ϕ_b, for MSE walls (i.e., $q_R = \phi_b q_n$).

Precast Concrete Panel Facing Parameters

$S_{vt} = 2.5$ Vertical spacing of reinforcement, ft

Note: vertical spacing should not exceed 2.7 ft without full scale test data **LRFD [11.10.6.2.1]**

$w_p = 5.0$ Width of precast concrete panel facing, ft

$h_p = 5.0$ Height of precast concrete panel facing, ft

$t_p = 6.0$ Thickness of precast concrete panel facing, in

Soil Reinforcement Design Parameters

Galvanized steel ribbed strips Reinforcing type

$F_y = 65$ Reinforcing strip yield strength, ksi (Grade 65)

$b_mm = 50$ Reinforcing strip width, mm

$$b = \frac{b_mm}{25.4} \qquad \boxed{b = 1.97} \text{ in}$$

$E_{n_mm} = 4$ Reinforcing strip thickness, mm

$$E_n = \frac{E_{n_mm}}{25.4} \qquad \boxed{E_n = 0.16} \text{ in}$$

$Zinc = 3.4$ Zinc coating, mils (Minimum **LRFD [11.10.6.4.2a]**)

Live Load Surcharge Parameters

$SUR = 0.100$ Live load surcharge for walls without traffic, ksf (14.4.5.4.2)

Resistance Factors

$\phi_s = 1.00$	Sliding of MSE wall at foundation **LRFD [Table 11.5.7-1]**
$\phi_b = 0.65$	Bearing resistance **LRFD [Table 11.5.7-1]**
$\phi_t = 0.75$	Tensile resistance (steel strips) **LRFD [Table 11.5.7-1]**
$\phi_p = 0.90$	Pullout resistance **LRFD [Table 11.5.7-1]**

E14-2.3 Estimate Depth of Embedment and Length of Reinforcement

For this example it is assumed that global stability does not govern the required length of soil reinforcement.

Embedment Depth, d_e

Frost-susceptible material is assumed to be not present or that it has been removed and replaced with nonfrost susceptible material per **LRFD [11.10.2.2]**. There is also no potential for scour. Therefore, the minimum embedment, d_e, shall be the greater of 1.5 ft (14.6.4) or H/20 **LRFD [Table C11.10.2.2-1]**

Note: While AASHTO allows the d_e value of 1.0 ft on level ground, the embedment depth is limited to 1.5 ft by WisDOT policy as stated in Chapter 14.

$$\frac{H}{20} = 1.1 \quad \text{ft}$$

$$d_e = \max\left(\frac{H}{20}, 1.5\right) \qquad \boxed{d_e = 1.50} \text{ ft}$$

Therefore, the initial design wall height assumption was correct.

$$H_e = 20.5 \quad \text{ft}$$

$$H = H_e + 1.5 \qquad \boxed{H = 22.00} \text{ ft}$$

Length of Reinforcement, L

In accordance with **LRFD [11.10.2.1]** the minimum required length of soil reinforcement shall be the greater of 8 feet or 0.7H. Due to the sloping backfill surcharge and live load surcharge a longer reinforcement length of 0.9H will be used in this example. The length of reinforcement will be uniform throughout the entire wall height.

$0.9\,H = 19.8$ ft

$L_{user} = 20.0$ ft

$L = \max(8.0, 0.9\,H, L_{user})$ $\boxed{L = 20.00}$ ft

Height of retained fill at the back of the reinforced soil, h

$h = H + L\tan(\beta)$ $\boxed{h = 32.00}$ ft

E14-2.4 Permanent and Transient Loads

In this example, load types EV (vertical earth pressure), EH (horizontal earth pressure) and LS (live load surcharge) will be used as shown in Figure E14-2.4-1. Due to the relatively thin wall thickness the weight and width of the concrete facing will be ignored. Passive soil resistance will also be ignored.

E14-2.4.1 Compute Active Earth Pressure

Compute the coefficient of active earth pressure (k_a) using Coulomb Theory **LRFD [Eq 3.11.5.3-1]** with the wall backfill material interface friction angle, δ, set equal to β (i.e. $\delta=\beta$) **LRFD [11.10.5.2].** The retained backfill soil will be used (i.e., $k_a=k_{af}$)

$\phi_f = 29$ deg

$\beta = 26.565$ deg

$\theta = 90$ deg

$\delta = \beta$

$$\Gamma = \left(1 + \sqrt{\frac{\sin(\phi_f + \delta)\,\sin(\phi_f - \beta)}{\sin(\theta - \delta)\,\sin(\theta + \beta)}}\right)^2 \qquad \boxed{\Gamma = 1.462}$$

$$k_{af} = \frac{\sin(\theta + \phi_f)^2}{\Gamma\,\sin(\theta)^2\,\sin(\theta - \delta)} \qquad \boxed{k_{af} = 0.585}$$

E14-2.4.2 Compute Unfactored Loads

The forces and moments are computed using Figure E14-2.4-1 by their appropriate LRFD load types **LRFD [Tables 3.4.1-1 and 3.4.1-2]**

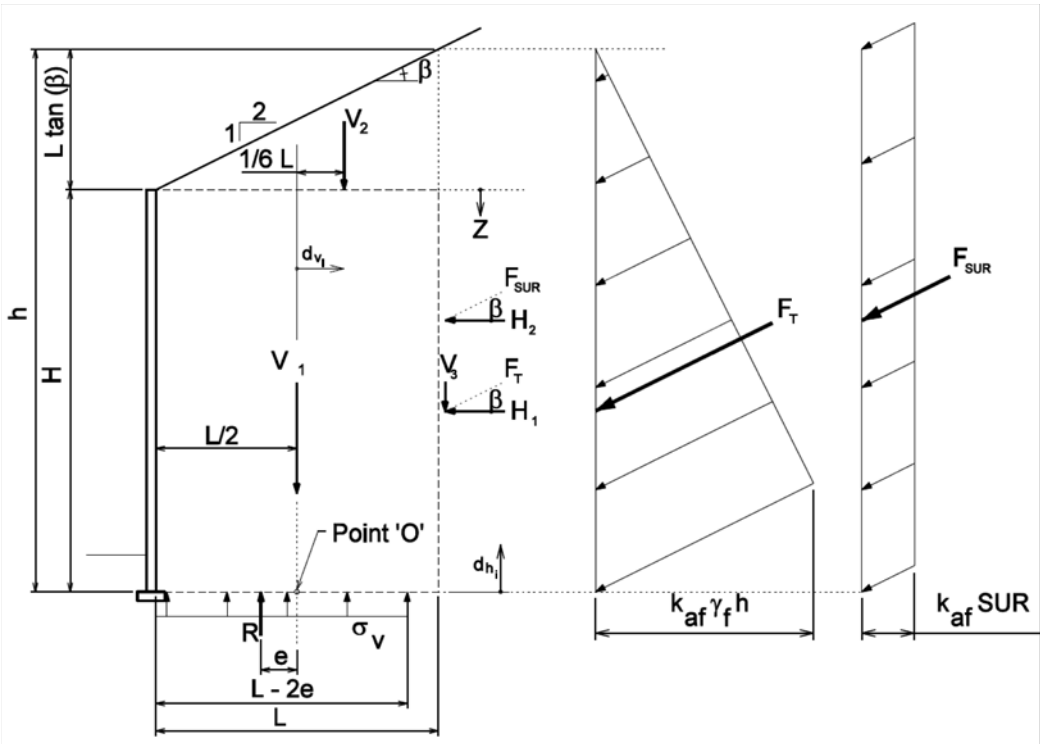

Figure E14-2.4-1
MSE Wall - External Stability

Active Earth Force Resultant, (kip/ft), F_T

$$F_T = \frac{1}{2}\gamma_f h^2 k_{af}$$ Active earth force resultant (EH) $\boxed{F_T = 35.9}$

Live Load Surcharge Resultant, (kip/ft), F_{SUR}

$$F_{SUR} = SUR\ h\ k_{af}$$ Live load surcharge (LS) $\boxed{F_{SUR} = 1.9}$

Vertical Loads, (kip/ft), V_i

$$V_1 = \gamma_r H L$$ Soil backfill - reinforced soil (EV) $\boxed{V_1 = 52.8}$

$$V_2 = \frac{1}{2}\gamma_f L (L \tan(\beta))$$ Soil backfill - backslope (EV) $\boxed{V_2 = 12.0}$

$$V_3 = F_T \sin(\beta)$$ Active earth force resultant (vertical component - EH) $\boxed{V_3 = 16.1}$

Moments produced from vertical loads about Point 'O', (kip-ft/ft) MV_i

Moment Arm		Moment	
$d_{v1} = 0$	$d_{v1} = 0.0$	$MV_1 = V_1\ d_{v1}$	$MV_1 = 0.0$
$d_{v2} = \frac{1}{6}L$	$d_{v2} = 3.3$	$MV_2 = V_2\ d_{v2}$	$MV_2 = 40.0$
$d_{v3} = \frac{L}{2}$	$d_{v3} = 10.0$	$MV_3 = V_3\ d_{v3}$	$MV_3 = 160.7$

Horizontal Loads, (kip/ft), H_i

$H_1 = F_T \cos(\beta)$	Active earth force resultant (horizontal component - EH)	$H_1 = 32.1$
$H_2 = F_{SUR} \cos(\beta)$	Live load surcharge resultant (horizontal component - LS)	$H_2 = 1.7$

Moments produced from horizontal loads about Point 'O', (kip-ft/ft), MH_i

Moment Arm		Moment	
$d_{h1} = \frac{h}{3}$	$d_{h1} = 10.7$	$MH_1 = H_1\ d_{h1}$	$MH_1 = 342.8$
$d_{h2} = \frac{h}{2}$	$d_{h2} = 16.0$	$MH_2 = H_2\ d_{h2}$	$MH_2 = 26.8$

Summary of Unfactored Forces & Moments:

Load			Moment Arm		Moment		LRFD Load Type
Item	Description	Value (kip/ft)	Item	Value (ft)	Item	Value (kip-ft/ft)	
V_1	Soil backfill	52.80	d_{v1}	0.0	MV_1	0.0	EV
V_2	Soil backfill	12.00	d_{v2}	3.3	MV_2	40.0	EV
V_3	Active earth pressure	16.10	d_{v3}	10.0	MV_3	160.7	EH

Table E14-2.4-1
Unfactored Vertical Forces & Moments

Load			Moment Arm		Moment		LRFD Load Type
Item	Description	Value (kip/ft)	Item	Value (ft)	Item	Value (kip-ft/ft)	
H_1	Active earth pressure	32.1	d_{h1}	10.7	MH_1	342.8	EH
H_2	Live load surcharge	1.70	d_{h2}	16.0	MH_2	26.8	LS

Table E14-2.4-2
Unfactored Horizontal Forces & Moments

E14-2.4.3 Summarize Applicable Load and Resistance Factors

Maximum and minimum load factors shall be used to determine the extreme load effects. WisDOT's policy is to set all load modifiers to one ($n = 1.0$). Factored loads and moments for each limit state are calculated by applying the appropriate load factors **LRFD [Tables 3.4.1-1 and 3.4.1-2]**. The following load combinations will be checked in this example:

Load Combination Limit State	EV	LS	EH
Strength Ia (minimum)	$\gamma_{EVmin} = 1.00$	$\gamma_{LSmin} = 1.75$	$\gamma_{EHmin} = 0.90$
Strength Ib (maximum)	$\gamma_{EVmax} = 1.35$	$\gamma_{LSmax} = 1.75$	$\gamma_{EHmax} = 1.50$
Service I (max/min)	$\gamma_{EV} = 1.00$	$\gamma_{LS} = 1.00$	$\gamma_{EH} = 1.00$

Load Combination	γ_{EV}	γ_{LS_V}	γ_{LS_H}	γ_{EH}	Application
Strength Ia	1.00	-	1.75	1.50	Sliding, Eccentricity
Strength Ib	1.35	1.75	1.75	1.50	Bearing, T_{max}
Service I	1.00	1.00	1.00	1.00	Pullout (σ_v)

Table E14-2.4-3
Unfactored Horizontal Forces & Moments

Load Combination Assumptions:

- Live load surcharge stabilizing loads (if applicable) are ignored for overturning and sliding analyses. Live load surcharge is used to compute maximum bearing pressure, wall strength and overall (global) stability.
- Minimum horizontal earth pressure ,$\gamma_{EH(min)} = 0.9$, will not control in this example based on B/H and lateral load inclination, but should be checked.
- Component load factors shall remain consistent throughout calculations. For example, the active earth force resultant (F_T) can be broken into component forces of either $V_3\gamma_{EH(max)}$ and $H_1\gamma_{EH(max)}$ or $V_3\gamma_{EH(min)}$ and $H_1\gamma_{EH(min)}$, not $V_3\gamma_{EH(min)}$ and $H_1\gamma_{EH(max)}$.
- T_{max1} (Pullout) is calculated without live load and T_{max2} (Rupture) is calculated with live load.

The loads discussed and tabulated previously can now be factored by the appropriate load factors and combined to determine the governing limit states for each design check.

E14-2.4.3 Compute Factored Loads and Moments

Unfactored loads by load type (kip/ft)

$V_{EV} = V_1 + V_2$ $\boxed{V_{EV} = 64.8}$

$V_{EH} = V_3$ $\boxed{V_{EH} = 16.1}$

$H_{EH} = H_1$ $\boxed{H_{EH} = 32.1}$

$H_{LS} = H_2$ $\boxed{H_{LS} = 1.7}$

Unfactored moments by load type (kip-ft/ft)

$M_{EV} = MV_1 + MV_2$ $\boxed{M_{EV} = 40.0}$

$M_{EH1} = MV_3$ $\boxed{M_{EH1} = 160.7}$

$M_{EH2} = MH_1$ $\boxed{M_{EH2} = 342.8}$

$M_{LS2} = MH_2$ $\boxed{M_{LS2} = 26.8}$

Factored vertical loads by limit state (kip/ft)

$V_Ia = n\left(1.00V_{EV} + 1.50\ V_{EH}\right)$ $\boxed{V_Ia = 88.9}$

$V_Ib = n\left(1.35V_{EV} + 1.50\ V_{EH}\right)$ $\boxed{V_Ib = 111.6}$

$V_Ser = n\left(1.00V_{EV} + 1.00\ V_{EH}\right)$ $\boxed{V_Ser = 80.9}$

Factored horizontal loads by limit state (kip/ft)

$H_Ia = n\left(1.75H_{LS} + 1.50H_{EH}\right)$ $\boxed{H_Ia = 51.1}$

$H_Ib = n\left(1.75H_{LS} + 1.50H_{EH}\right)$ $\boxed{H_Ib = 51.1}$

$H_Ser = n\left(1.00H_{LS} + 1.00H_{EH}\right)$ $\boxed{H_Ser = 33.8}$

Factored moments produced by vertical Loads by limit state (kip-ft/ft)

$MV_Ia = n\left(1.00M_{EV} + 1.50\ M_{EH1}\right)$ $\boxed{MV_Ia = 281.0}$

$MV_Ib = n\left(1.35M_{EV} + 1.50\ M_{EH1}\right)$ $\boxed{MV_Ib = 295.0}$

$MV_Ser = n\left(1.00M_{EV} + 1.00\ M_{EH1}\right)$ $\boxed{MV_Ser = 200.7}$

Factored moments produced by horizontal loads by limit state (kip-ft/ft)

$MH_Ia = n\left(1.75M_{LS2} + 1.50\ M_{EH2}\right)$ $\boxed{MH_Ia = 561.1}$

$MH_Ib = n\left(1.75M_{LS2} + 1.50\ M_{EH2}\right)$ $\boxed{MH_Ib = 561.1}$

$MH_Ser = n\left(1.00M_{LS2} + 1.00\ M_{EH2}\right)$ $\boxed{MH_Ser = 369.6}$

Summary of Factored Forces & Moments:

Load Combination	Vert. Loads V (kips/ft)	Moments MV (kip-kip/ft)	Horiz. Loads H (kips/ft)	Moments MH (kip-kip/ft)
Strength Ia	88.9	281.0	51.1	561.1
Strength Ib	111.6	295.0	51.1	561.1
Service I	80.9	200.7	33.8	369.6

Table E14-2.4-4
Summary of Factored Loads & Moments

E14-2.5 Evaluate External Stability of MSE Wall

Three potential external failure mechanisms will be considered in this example (sliding at the base, limiting eccentricity and bearing resistance). Global (overall) stability requirements are assumed to have been satisfied in prior calculations. Design calculations will be carried out for the governing limit states only.

E14-2.5.1 Sliding Resistance at Base of MSE Wall

The following calculations are based on **Strength Ia**:

Factored Sliding Force

$R_u = H_Ia$ $\boxed{R_u = 51.14}$ kip/ft

Sliding Resistance

To compute the coefficient of sliding friction for discontinuous reinforcement use the lesser friction angle of the reinforced back fill, ϕ_r , or foundation soil, ϕ_{fd}, **LRFD [11.10.5.3]**.

$\phi_\mu = \min(\phi_r, \phi_{fd})$ $\boxed{\phi_\mu = 30 \text{ deg}}$

$\mu = \tan(\phi_\mu)$ $\boxed{\mu = 0.577}$

$V_Ia = 88.9$ Factored vertical load, kip/ft

$V_{Nm} = \mu\ V_Ia$ $\boxed{V_{Nm} = 51.3}$ kip/ft

$\phi_s = 1.0$

$R_R = \phi_s\ V_{Nm}$ $\boxed{R_R = 51.33}$ kip/ft

<u>Capacity:Demand Ratio (CDR)</u>

$CDR_{Sliding} = \dfrac{R_R}{R_u}$ $\boxed{CDR_{Sliding} = 1.00}$

Is the $CDR \geq 1.0$? $\boxed{\text{check} = \text{"OK"}}$

E14-2.5.2 Limiting Eccentricity at Base of MSE Wall

The location of the resultant of the reaction forces is limited to the middle two-thirds of the base width for a soil foundation (i.e., e_{max} = L/3) **LRFD [11.6.3.3]**. The following calculations are based on **Strength Ia**:

Maximum eccentricity

$$e_{max} = \frac{L}{3}$$

$e_{max} = 6.67$ ft

Compute wall eccentricity (distance from Point 'O' in Figure E14-2.4-1)

$\Sigma M_R = MV_Ia$ Summation of resisting moments for Strength Ia

$\Sigma M_O = MH_Ia$ Summation of overturning moments for Strength Ia

$\Sigma V = V_Ia$ Summation of vertical loads for Strength Ia

$\Sigma M_R = 281.0$ kip-ft/ft

$\Sigma M_O = 561.1$ kip-ft/ft

$\Sigma V = 88.9$ kip/ft

$$e = \frac{\Sigma M_O - \Sigma M_R}{\Sigma V}$$

$e = 3.15$ ft

<u>Capacity:Demand Ratio (CDR)</u>

$$CDR_{Eccentricity} = \frac{e_{max}}{e}$$

$CDR_{Eccentricity} = 2.12$

Is the $CDR \geq 1.0$?

check = "OK"

E14-2.5.3 Bearing Resistance at base of MSE Wall

The following calculations are based on **Strength Ib**:

Compute wall eccentricity (distance from Point 'O' in Figure E14-2.4-1)

$\Sigma M_R = MV_Ib$ Summation of resisting moments for Strength Ib

$\Sigma M_O = MH_Ib$ Summation of overturning moments for Strength Ib

$\Sigma V = V_Ib$ Summation of vertical loads for Strength Ib

$\Sigma M_R = 295.0$ kip-ft/ft

$\Sigma M_O = 561.1$ kip-ft/ft

$\Sigma V = 111.6$ kip/ft

$$e = \frac{\Sigma M_O - \Sigma M_R}{\Sigma V}$$

$e = 2.38$ ft

Compute the ultimate bearing stress

σ_V = Ultimate bearing stress
L = Bearing length
e = Eccentricity (resultant produced by extreme bearing resistance loading)

Note: For the bearing resistance calculations the effective bearing width, B' = L-2e, is used instead of the actual width. Also, when the eccentricity, e, is negative: B'=L. The vertical stress is assumed to be uniformly distributed over the effective bearing width, B', since the wall is supported by a soil foundation **LRFD [11.6.3.2]**.

$$\sigma_V = \frac{\Sigma V}{L - 2\,e}$$

$\sigma_V = 7.33$ ksf/ft

Factored bearing resistance

$q_R = 10.00$ ksf/ft

<u>Capacity:Demand Ratio (CDR)</u>

$$CDR_{Bearing} = \frac{q_R}{\sigma_V}$$

$CDR_{Bearing} = 1.37$

Is the $CDR \geq 1.0$?

check = "OK"

E14-2.6 Evaluate Internal Stability of MSE Wall

Note: MSE walls are a proprietary wall system and the internal stability computations shall be performed by the wall supplier.

Internal stability shall be checked for 1) pullout and 2) rupture in accordance with **LRFD [11.10.6]**. The factored tensile load, T_{max}, is calculated twice for internal stability checks for vertical stress (σ_V) calculations. For pullout T_{max1} is determined by excluding live load surcharge. For rupture T_{max2} is determined by including live load surcharge. In this example, the maximum reinforcement loads are calculated using the Simplified Method.

The location of the potential failure surface for a MSE wall with metallic strip or grid reinforcements (inextensible) is shown in Figure E14-2.6-1.

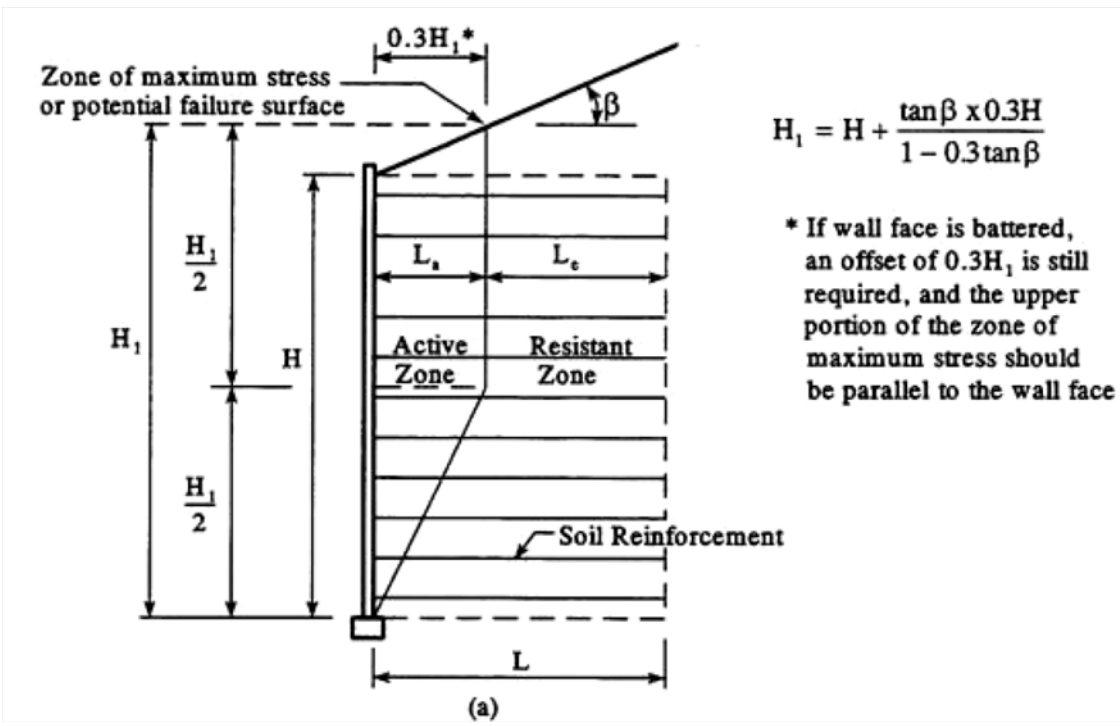

Figure E14-2.6-1
MSE Wall - Internal Stability (Inextensible Reinforcement)
FHWA [Figure 4-9]

E14-2.6.1 Establish the Vertical Layout of Soil Reinforcement

Soil reinforcement layout is shown in Table E14-2.6-1. The location of the reinforcement levels corresponds to the vertical depth, Z, into the reinforced soil. The vertical layout was determined by the industry practice of 2.5 ft vertical spacing for steel ribbed strip reinforcement. The top level vertical spacing was adjusted to fit the height of the wall. Computations for determining the maximum tension, T_{max}, at Z = 8.25 ft are as follows:

$Layer = 4$ Layer of reinforcement (from top)

$Z = 8.25$ Depth below top of wall, ft

$S_{vt} = 2.5$ Vertical spacing of reinforcement, ft

$w_p = 5.00$ Width of precast concrete panel facing, ft

Calculate the upper and lower tributary depths based on the reinforcement vertical spacing

$$Z_{neg} = Z - \frac{S_{vt}}{2} \qquad \boxed{Z_{neg} = 7.0} \text{ ft}$$

$$Z_{pos} = Z + \frac{S_{vt}}{2} \qquad \boxed{Z_{pos} = 9.5} \text{ ft}$$

Layer	Z (ft)	Z^- (ft)	Z^+ (ft)	S_{vt} (ft)
1	0.75	0	0.75+0.5(3.25-0.75)= 2.0	2.00
2	3.25	3.25-0.5(3.25-0.75)= 2.0	3.25+0.5(5.75-3.25)= 4.5	2.50
3	5.75	5.75-0.5(5.75-3.25)= 4.5	5.75+0.5(8.25-5.75)= 7.0	2.50
4	**8.25**	**8.25-0.5(8.25-5.75)= 7.0**	**8.25+0.5(10.75-8.25)= 9.5**	**2.50**
5	10.75	10.75-0.5(10.75-8.25)= 9.5	10.75+0.5(13.25-10.75)= 12.0	2.50
6	13.25	13.25-0.5(13.25-10.75)= 12.0	13.25+0.5(15.75-13.25)= 14.5	2.50
7	15.75	15.75-0.5(15.75-13.25)= 14.5	15.75+0.5(18.25-15.75)= 17.0	2.50
8	18.25	18.25-0.5(18.25-15.75)= 17.0	18.25+0.5(20.75-18.25)= 19.5	2.50
9	20.75	20.75-0.5(20.75-18.25)= 19.5	22	2.50

Table E14-2.6-1
Summary of Computations for Reinforcement Spacing, S_{vt}

E14-2.6.2 Compute Horizontal Stress and Maximum Tension, T_{max}

Factored horizontal stress

$$\sigma_H = \gamma_P (\sigma_v k_r + \Delta\sigma_H)$$ **LRFD [Equation 11.10.6.2.1-1]**

γ_p = Load factor for vertical earth pressure (γ_{EVmax})
k_r = Horizontal pressure coefficient
σ_v = Pressure due to gravity and surcharge for pullout, T_{max1} ($\gamma_r Z_{trib}+\sigma_2$)
σ_v = Pressure due to gravity and surcharge for pullout resistance ($\gamma_r Z_{p\text{-}PO}$)
σ_v = Pressure due to gravity and surcharge for rupture, T_{max2} ($\gamma_r Z_{trib} + \sigma_2 + q$)
$\Delta\sigma_H$ = Horizontal pressure due to concentrated horizontal surcharge load
Z = Reinforcement depth for max stress Figure E14-2.6-2
Z_p = Depth of soil at reinforcement layer potential failure plane
$Z_{p\text{-}ave}$ = Average depth of soil at reinforcement layer in the effective zone
σ_2 = Equivalent uniform stress from backslope $(0.5(0.7)L\tan\beta)\gamma_f$
q = Surcharge load (q = SUR), ksf

To compute the lateral earth pressure coefficient, k_r , a k_a multiplier is used to determine k_r for each of the respective vertical tributary spacing depths (Z_{pos}, Z_{neg}). The k_a multiplier is determined using Figure E14-2.6-2. To calculate k_a it is assumed that $\delta=\beta$ and $\beta = 0$; thus,

$k_a=\tan^2(45-\phi_f/2)$ **LRFD [Equation C11.10.6.2.1-1]**

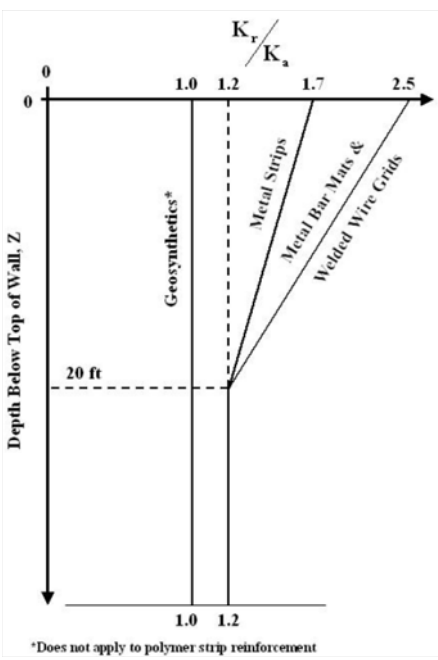

Figure E14-2.6-2
k_r/k_a Variation with MSE Wall Depth
FHWA [Figure 4-10]

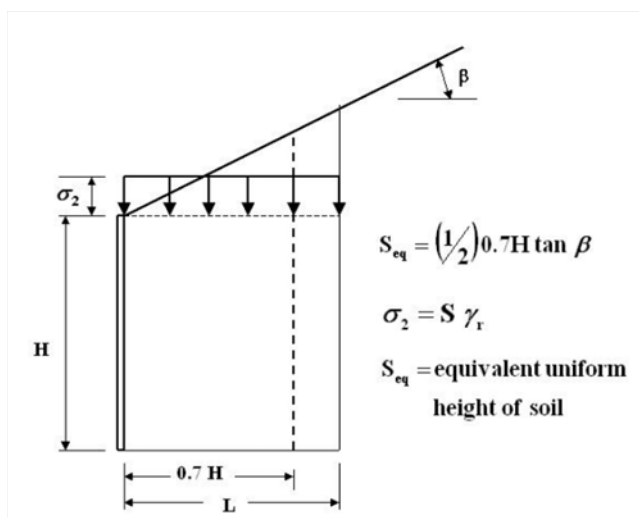

Figure E14-2.6-3
Calculation of Vertical Stress
FHWA [Figure 4-11]

Calculate the coefficient of active earth pressure, k_a

$\phi_f = 29\ \text{deg}$

$$k_a = \tan\left(45\ \text{deg} - \frac{\phi_f}{2}\right)^2$$

$\boxed{k_a = 0.347}$

Compute the internal lateral earth pressure coefficient limits based on applying a k_a multiplier as shown in Figure E14-2.6-2. For inextensible steel ribbed strips the k_a multiplier decreases linearly from the top of the reinforced soil zone to a depth of 20 ft. Thus, the k_a multiplier will vary from 1.7 at Z=0 ft to 1.2 at Z=20 ft. To compute k_r apply these values to the coefficient of active earth pressure.

$k_{r_0ft} = 1.7\ k_a$ $\boxed{k_{r_0ft} = 0.590}$

$k_{r_20ft} = 1.2\ k_a$ $\boxed{k_{r_20ft} = 0.416}$

Compute the internal lateral earth pressure coefficients, k_r, for each of the respective tributary depths. Since both depths, Z_{neg} and Z_{pos}, are less than 20 ft k_r will be interpolated at their respective depths

$$k_{r_neg} = k_{r_20ft} + \frac{(20 - Z_{neg})\,(k_{r_0ft} - k_{r_20ft})}{20}$$ $\boxed{k_{r_neg} = 0.529}$

$$k_{r_pos} = k_{r_20ft} + \frac{(20 - Z_{pos})\,(k_{r_0ft} - k_{r_20ft})}{20}$$ $\boxed{k_{r_pos} = 0.507}$

Compute effective (resisting) length, L_e

$Z = 8.25$ ft Refer to Figure E14-2.6-1. ($\Delta H = H_1 - H$)

$H = 22.0$ ft

$L = 20$ ft

$$\Delta H = \frac{\tan(\beta)\ (0.3\ H)}{1 - 0.3\tan(\beta)}$$ $\boxed{\Delta H = 3.88}$ ft

$$H_1 = H + \Delta H$$ $\boxed{H_1 = 25.9}$ ft

$$L_a = \begin{cases} 0.3\ H_1 & \text{if } Z \le \dfrac{H_1}{2} - \Delta H \\ \dfrac{H - Z}{\frac{H_1}{2}}\left(0.3\ H_1\right) & \text{otherwise} \end{cases}$$ $\boxed{L_a = 7.76}$ ft

$$L_e = \max(L - L_a, 3)$$ $\boxed{L_e = 12.24}$ ft

Note: L_e shall be greater than or equal to 3 feet **LRFD [11.10.6.3.2]**

E14-2.6.3 Establish Nominal and Factored Pullout Resistance of Soil Reinforcement

Compute the factored horizontal stress, σ_H, at Z by averaging the upper and lower tributary values (Z_{neg} and Z_{pos}). Since there is no horizontal stresses from concentrated dead loads values $\Delta\sigma_H$ is set to zero.

$$\sigma_H = \gamma_{EVmax}\,(\gamma_r Z_{trib} + \sigma_2) k_r$$

Surcharge loads

$$\sigma_2 = \frac{1}{2}\,0.7\,H\,\tan(\beta)\,\gamma_f$$ $\sigma_2 = 0.46$ ksf/ft

Horizontal stress at Z_{neg} and Z_{pos}

$$\sigma_{H_neg} = \gamma_{EVmax}\left(\gamma_r Z_{neg} + \sigma_2\right) k_{r_neg}$$ $\sigma_{H_neg} = 0.93$ ksf/ft

$$\sigma_{H_pos} = \gamma_{EVmax}\left(\gamma_r Z_{pos} + \sigma_2\right) k_{r_pos}$$ $\sigma_{H_pos} = 1.10$ ksf/ft

Horizontal stress at Z

$$\sigma_H = 0.5\left(\sigma_{H_pos} + \sigma_{H_neg}\right)$$ $\sigma_H = 1.01$ ksf/ft

Compute the maximum tension, T_{max1} , at Z

$$A_{trib} = S_{vt}\,w_p$$ $A_{trib} = 12.50$ ft^2

$$T_{max1} = \sigma_H\,A_{trib}$$ $T_{max1} = 12.67$ kip/strip

Compute effective vertical stress for pullout resistance, σ_v

$$Z_{p_PO} = Z + 0.5\,\tan(\beta)\left(L_a + L\right)$$ $Z_{p_PO} = 15.2$ ft

$\gamma_{EV} = 1.00$ Unfactored vertical stress for pullout resistance **LRFD [11.10.6.3.2]**

$$\sigma_v = \gamma_{EV}\,\gamma_r\,Z_{p_PO}$$ $\sigma_v = 1.82$ ksf

Compute pullout resistance factor, F*

The coefficient of uniformity, C_u, shall be computed based on backfill gradations D_{60}/D_{10}. If the backfill material is unknown at the time of design a conservative assumption of C_u=4 should be assumed **LRFD [11.10.6.3.2]**.

The pullout resistance factor, F*, for inextensible steel ribbed strips decreases linearly from the top of the intersection of the failure plane with the top of the reinforced soil zone. Thus, F* will vary from 1.2+log C_u (<= 2.0) at Z=0 ft to tan(ϕ_r) at Z=20 ft. Since no product-specific pullout test data is provided at the time of design the default value for F* will be used as provided by **LRFD [Figure 11.10.6.3.2-1]**.

$C_u = 4$ Coefficient of uniformity (C_u=4 default value) **LRFD [11.10.6.3.2]**

$F'_{0ft} = \min(2.00, 1.2 + \log(C_u))$ $\boxed{F'_{0ft} = 1.80}$

$F'_{20ft} = \tan(\phi_r)$ $\boxed{F'_{20ft} = 0.58}$

$$F' = \begin{cases} F'_{20ft} + \dfrac{20.0 - Z}{20}\left(F'_{0ft} - F'_{20ft}\right) & \text{if } Z \le 20.0 \\ \tan(\phi_r) & \text{otherwise} \end{cases}$$

$\boxed{F' = 1.30}$

Compute nominal pullout resistance, P_r

$\alpha = 1.0$ Scale effect correction factor (steel reinforcement $\alpha = 1.0$ default value) **LRFD [Table 11.10.6.3.2-1]**

$C = 2$ Overall reinforcement surface area geometry factor (strip reinforcement C = 2.0) **LRFD [11.10.6.3.2]**

$R_c = 1$ Reinforcement coverage ratio (continuous reinforcement R_c = 1.0) **LRFD [11.10.6.4]**

Note: Using strips are considered discontinuous, however the nominal pullout resistance is based on the actual strip width, rather than a unit width, the reinforcement coverage ratio is 1.

$P_r = F' \alpha \sigma_v C R_c L_e b \frac{1}{12}$ $\boxed{P_r = 9.49}$ kip/strip

Compute factored pullout resistance, P_{rr}

$\phi_p = 0.9$

$P_{rr} = \phi_p P_r$ $\boxed{P_{rr} = 8.54}$ kip/strip

Determine number of soil reinforcing strips based on pullout resistance, N_p

$N_p = \frac{T_{max1}}{P_{rr}}$ $\boxed{N_p = 1.48}$ strips

E14-2.6.4 Establish Nominal and Factored Long-term Tensile Resistance of Soil Reinforcement

Compute the factored horizontal stress, σ_H

$$\sigma_H = \gamma_{EVmax}(\gamma_r Z + \sigma_2 + q)k_r$$

Surcharge loads

$\sigma_2 = 0.46$ ksf/ft

$q = 0.10$ ksf/ft

Horizontal stress at Z_{neg} and Z_{pos}

$\sigma_{H_neg} = \gamma_{EVmax}\left(\gamma_r Z_{neg} + \sigma_2 + q\right) k_{r_neg}$ $\sigma_{H_neg} = 1.00$ ksf/ft

$\sigma_{H_pos} = \gamma_{EVmax}\left(\gamma_r Z_{pos} + \sigma_2 + q\right) k_{r_pos}$ $\sigma_{H_pos} = 1.17$ ksf/ft

Horizontal stress at Z

$\sigma_H = 0.5\left(\sigma_{H_pos} + \sigma_{H_neg}\right)$ $\sigma_H = 1.08$ ksf/ft

Compute the maximum tension, T_{max}, at Z

$A_{trib} = S_{vt}\, w_p$ $A_{trib} = 12.50$ ft^2

$T_{max2} = \sigma_H A_{trib}$ $T_{max2} = 13.55$ kip/strip

E_c = thickness of metal reinforcement at end of service life (mil)
E_n = nominal thickness of steel reinforcement at construction (mil)
E_s = sacrificial thickness of metal lost by corrosion during service life of structure (mil)
b = width of metal reinforcement

$F_y = 65$	Reinforcing strip yield strength, ksi
$\phi_t = 0.75$	Tensile resistance (steel strip)
$E_n = 0.16$	Reinforcing strip thickness, in
$b = 1.97$	Reinforcing strip width, in
$Zinc = 3.4$	Galvanized coating, mils

Compute the design cross-sectional area of the reinforcement after sacrificial thicknesses have been accounted for during the wall design life per **LRFD [11.10.6.4.2a]**. The zinc coating life shall be calculated based on 0.58 mil/yr loss for the first 2 years and 0.16 mil/yr thereafter. After the depletion of the zinc coating, the steel design life is calculated and used to determine the sacrificial steel thickness after the steel design life. The sacrificial thickness of steel is based on 0.47 mil/yr/side loss.

Design_Life = Coating_Life + Steel_Design_Life = 75 years

$$\text{Coating_Life} = 2 + \frac{\text{Zinc} - 2\ 0.58}{0.16}$$ $\boxed{\text{Coating_Life} = 16.0}$ years

$$\text{Steel_Design_Life} = \text{Design_Life} - \text{Coating_Life}$$ $\boxed{\text{Steel_Design_Life} = 59}$ years

$$E_s = \left(\frac{0.47}{1000}\right) \text{Steel_Design_Life}\ (2)$$ $\boxed{E_s = 0.055}$ in

$$E_c = E_n - E_s$$ $\boxed{E_c = 0.102}$ in

$$\text{Design_Strip_Area} = E_c\ b$$ $\boxed{\text{Design_Strip_Area} = 0.201}$ in^2

Compute the Factored Tensile Resistance, T_r

$$T_n = F_y\ \text{Design_Strip_Area}$$ $\boxed{T_n = 13.05}$ kip/strip

$$T_r = \phi_t\ T_n$$ $\boxed{T_r = 9.79}$ kip/strip

Determine the number of soil reinforcing strips based on tensile resistance, N_t

$$N_t = \frac{T_{max2}}{T_r}$$ $\boxed{N_t = 1.38}$ strips

E14-2.6.5 Establish Number of Soil Reinforcing Strips at Z

$N_p = 1.48$ Based on pullout resistance, strips

$N_t = 1.38$ Based on tensile resistance, strips

Required number of strip reinforcements for each panel width (round up), N_g

$$N_g = \text{ceil}\left(\max\left(N_t, N_p\right)\right)$$ $\boxed{N_g = 2}$ strips

Calculate the horizontal spacing of reinforcement, S_h, at Z by dividing the panel width by the required number of strip reinforcements N_g.

$$S_h = \frac{w_p}{N_g}$$ $\boxed{S_h = 2.50}$ ft

Note: The typical horizontal reinforcement spacing, S_h, will be provided at 2.5 ft. This will also be the maximum allowed spacing while satisfying the maximum spacing requirement of 2.7 ft. If the wall requires additional reinforcement the vertical spacing will be maintained and adjustments will be made to the horizontal spacing accordingly.

E14-2.7 Summary of Results

E14-2.7.1 Summary of External Stability

Based on the defined project parameters, embedment depth and length of reinforcement the following external stability checks have been satisfied:

External Check	CDR
Sliding	1.00
Eccentricity	2.12
Bearing	1.37

Table E14-2.7-1
Summary of External Stability Computations

E14-2.7.2 Summary of Internal Stability

Computations for the required number of strip reinforcements at each level is presented in **Table E14-2.7-2**.

		Pullout			Rupture						
Layer	Z	σ_H	T_{max1}	P_{rr}	σ_H	T_{max2}	T_r	N_p	N_t	N_g	S_h
1	0.75	0.46	4.55	5.86	0.53	5.34	9.79	0.78	0.54	2	2.50
2	3.25	0.64	8.05	7.08	0.72	9.00	9.79	1.14	0.92	2	2.50
3	5.75	0.84	10.47	7.98	0.91	11.38	9.79	1.31	1.16	2	2.50
4	**8.25**	**1.01**	**12.67**	**8.54**	**1.08**	**13.55**	**9.79**	**1.48**	**1.38**	**2**	**2.50**
5	10.75	1.17	14.65	9.37	1.24	15.49	9.79	1.56	1.58	2	2.50
6	13.25	1.31	16.42	10.13	1.38	17.22	9.79	1.62	1.76	2	2.50
7	15.75	1.44	17.96	10.46	1.50	18.73	9.79	1.72	1.91	2	2.50
8	18.25	1.54	19.29	10.25	1.60	20.01	9.79	1.88	2.04	3	1.67
9	20.75	1.67	20.84	10.22	1.72	21.55	9.79	2.04	2.20	3	1.67

Table E14-2.7-2
Summary of Internal Stability Computation for Strength I Load Combinations

E14-2.7.3 Element Facings and Drainage Design

The design of element facings will not be examined in this example, but shall be considered in the design. This is to be performed by the wall supplier. This includes, but is not limited to, the structural integrity of the concrete face panels, connections, joint widths, differential settlements and the design of bearing pads used to prevent or minimize point loadings or stress concentrations and to accommodate for small vertical deformations of the panels.

Drainage requirements shall be investigated and detailed accordingly. In this example drainage requirements are meet by including a wrapped pipe underdrain behind the retaining wall as shown in Figure E14-2.8-1.

E14-2.8 Final MSE Wall Schematic

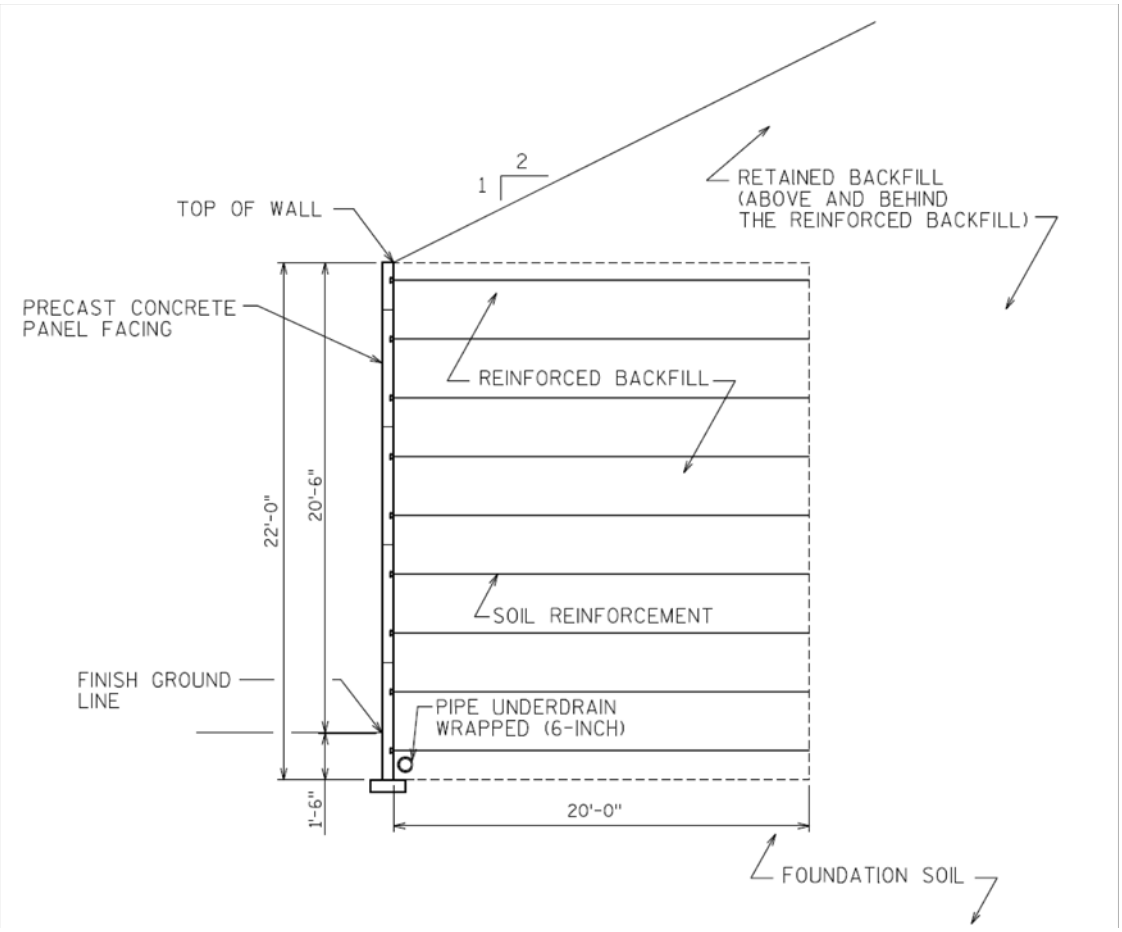

Figure E14-2.8-1
MSE Wall Schematic

This page intentionally left blank.

Table of Contents

E14-3 Modular Block Facing Geogrid Reinforced MSE Wall, LRFD 2
E14-3.1 Establish Project Requirements 2
E14-3.2 Design Parameters 3
E14-3.3 Estimate Depth of Embedment and Length of Reinforcement 5
E14-3.4 Permanent and Transient Loads 5
E14-3.4.1 Compute Active Earth Pressure 6
E14-3.4.2 Compute Unfactored Loads 6
E14-3.4.3 Summarize Applicable Load and Resistance Factors 8
E14-3.4.4 Compute Factored Loads and Moments 10
E14-3.5 Evaluate External Stability of MSE Wall 11
E14-3.5.1 Sliding Resistance at Base of MSE Wall 11
E14-3.5.2 Limiting Eccentricity at Base of MSE Wall 12
E14-3.5.3 Bearing Resistance at base of MSE Wall 13
E14-3.6 Evaluate Internal Stability of MSE Wall 14
E14-3.6.1 Establish the Vertical Layout of Soil Reinforcement 15
E14-3.6.2 Compute Horizontal Stress and Maximum Tension, Tmax 16
E14-3.6.3 Establish Nominal and Factored Pullout Resistance of Soil Reinforcement 18
E14-3.6.4 Establish Nominal and Factored Long-term Tensile Resistance of Soil Reinforcement 19
E14-3.6.5 Establish Grade of Soil Reinforcing Elements at Each Level 21
E14-3.7 Summary of Results E14-3.7.1 Summary of External Stability 21
E14-3.7 Summary of Results E14-3.7.1 Summary of External Stability 21
E14-3.7.2 Summary of Internal Stability 22
E14-3.8 Final MSE Wall Schematic 22

E14-3 Modular Block Facing Geogrid Reinforced MSE Wall, LRFD

General

This example shows design calculations for MSE wall with modular block facings conforming to the LRFD Bridge Design Specifications and the WisDOT Bridge Manual. *(Example is current through LRFD Fifth Edition - 2010)*

Sample design calculations for external stability (sliding, eccentricity and bearing) and internal stability (soil reinforcement stress and pullout) will be presented. The overall stability, settlement and connection calculations will not be shown in this example, but are required.

Design steps presented in 14.6.3.3 are used for the wall design.

E14-3.1 Establish Project Requirements

The following MSE wall shall have compacted freely draining soil in the reinforced zone and will be reinforced with geosynthetic (extensible) strips as shown in Figure E14-3.1-1. External stability is the designer's (WisDOT/Consultant) responsibility and internal stability and structural components are the contractors responsibility.

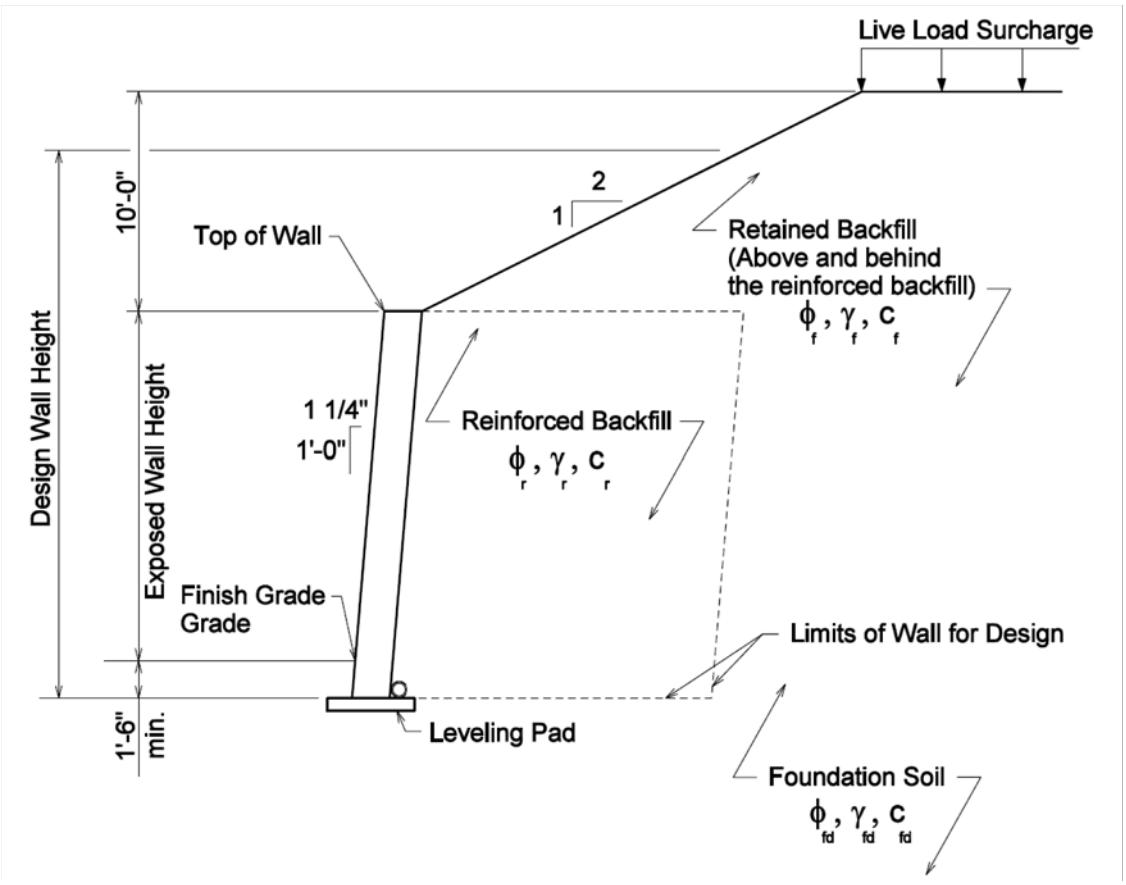

Figure E14-3.1-1
MSE Wall with Broken Backslope & Traffic

Wall Geometry

$H_e = 14.5$ Exposed wall height, ft

$H = H_e + 1.5$ Design wall height, ft (assume 1.5 ft wall embedment)

$\beta = 26.565\ deg$ Inclination of ground slope behind face of wall (2H:1V)

$b_1 = 1.25$ Front wall batter, in/ft (b_1H:12V)

$h_{slope} = 10.0$ Slope height, ft

$Batter = atan\left(\frac{b_1}{12}\right)$ Angle of front face of wall to vertical

$\boxed{Batter = 5.95\ deg}$

Note: Since the wall has less than 10 degrees of batter the wall can be defined as "near vertical" thus θ = 90 degrees and $\beta'=\delta'=I$ for a broken backslope

$\theta = 90\ deg$ Angle of back face of wall to horizontal

$I = atan\left(\frac{h_{slope}}{2\ H}\right)$ Infinite slope angle

$\boxed{I = 17.4\ deg}$

$\beta' = I$ Inclination of ground slope behind face of wall, deg

$\delta' = I$ Friction angle between fill and wall, deg

E14-3.2 Design Parameters

Project Parameters

$Design_Life = 75$ Wall design life, years (min) **LRFD [11.5.1]**

Soil Properties (From Geotechnical Site Investigation Report)

Designer to determine if long-term or short-term soil strength parameters govern external stability.

Reinforced Backfill Soil Design Parameters

$\phi_r = 30\ deg$ Angle of internal friction **LRFD [11.10.5.1]** and (14.4.6)

$\gamma_r = 0.120$ Unit of weight, kcf

$c_r = 0$ Cohesion, psf

Retained Backfill Soil Design Parameters

$\phi_f = 29\ deg$ Angle of internal friction

$\gamma_f = 0.120$ Unit of weight, kcf

$c_f = 0$ Cohesion, psf

Foundation Soil Design Parameters

$\phi_{fd} = 31deg$ Angle of internal friction

$\gamma_{fd} = 0.125$ Unit of weight, kcf

$c_{fd} = 0$ Cohesion, psf

Factored Bearing Resistance of Foundation Soil

$q_R = 6.5$ Factored resistance at the strength limit state, ksf

Note: The factored bearings resistance, q_R, was assumed to be given in the Site Investigation Report. If not provided q_R shall be determined by calculating the nominal bearing resistance, q_n, per **LRFD [Eq 10.6.3.1.2a-1]** and factored with the bearing resistance factor,ϕ_b, for MSE walls (i.e., $q_R=\phi_b q_n$).

Precast Concrete Panel Facing Parameters

$S_v = 1.333$ Vertical spacing of reinforcement, ft

Note: vertical spacing should not exceed 2.7 ft without full scale test data **LRFD [11.10.6.2.1]**

Soil Reinforcement Design Parameters

Geosynthetic - Geogrids Reinforcing type

Note: Product specific information to be defined during internal stability checks

Live Load Surcharge Parameters

$h_{eq} = 2.0$ Equivalent height of soil for surcharge load, ft (14.4.5.4.2)

$SUR = h_{eq}\,\gamma_f$ Live load soil for surcharge load

$\boxed{SUR = 0.240}$ ksf/ft

Resistance Factors

$\phi_s = 1.00$ Sliding of MSE wall at foundation **LRFD [Table 11.5.7-1]**

$\phi_b = 0.65$ Bearing resistance **LRFD [Table 11.5.7-1]**

$\phi_t = 0.90$ Tensile resistance (geosynthetic reinforcement and connectors) **LRFD [Table 11.5.7-1]**

$\phi_p = 0.90$ Pullout resistance **LRFD [Table 11.5.7-1]**

E14-3.3 Estimate Depth of Embedment and Length of Reinforcement

For this example it is assumed that global stability does not govern the required length of soil reinforcement.

Embedment Depth, d_e

Frost-susceptible material is assumed to be not present or that it has been removed and replaced with nonfrost susceptible material per **LRFD [11.10.2.2]**. There is also no potential for scour. Therefore, the minimum embedment, d_e, shall be the greater of 1.5 ft (14.6.4) or H/20 **LRFD [Table C11.10.2.2-1]**

Note: While AASHTO allows the d_e value of 1.0 ft on level ground, the embedment depth is limited to 1.5 ft by WisDOT policy as stated in Chapter 14.

$$\frac{H}{20} = 0.8 \quad \text{ft}$$

$$d_e = \max\left(\frac{H}{20}, 1.5\right) \qquad \boxed{d_e = 1.50} \quad \text{ft}$$

Therefore, the initial design wall height assumption was correct.

$$H_e = 14.5 \quad \text{ft}$$

$$H = H_e + 1.5 \qquad \boxed{H = 16.00} \quad \text{ft}$$

Length of Reinforcement, L

In accordance with **LRFD [11.10.2.1]** the minimum required length of soil reinforcement shall be the greater of 8 feet or 0.7H. Due to the sloping backfill and traffic surcharge a longer reinforcement length of 0.9H will be used in this example. The length of reinforcement will be uniform throughout the entire wall height.

$$0.9\,H = 14.4 \quad \text{ft}$$

$$L_{user} = 14.5 \quad \text{ft}$$

$$L = \max(8.0, 0.9\,H, L_{user}) \qquad \boxed{L = 14.50} \quad \text{ft}$$

Height of retained fill at the back of the reinforced soil, h

$$h = H + L\tan(\beta) \qquad \boxed{h = 23.25} \quad \text{ft}$$

E14-3.4 Permanent and Transient Loads

In this example, load types EV (vertical earth pressure), EH (horizontal earth pressure) and LS (live load surcharge) will be used as shown in Figure E14-3.4-1. No transient loads are present in this example. Due to the relatively thin wall thickness the weight and width of the concrete facing will be ignored. Passive soil resistance will also be ignored.

E14-3.4.1 Compute Active Earth Pressure

Compute the coefficient of active earth pressure (k_a) using Coulomb Theory **LRFD [Eq 3.11.5.3-1]** with the wall backfill material interface friction angle, δ, set equal to β (i.e. $\delta=\beta$) **LRFD [11.10.5.2].** The retained backfill soil will be used (i.e., $k_a=k_{af}$)

$\phi_f = 29$ deg

$\beta' = 17.4$ deg

$\theta = 90$ deg

$\delta' = 17.4$ deg

$$\Gamma = \left(1 + \sqrt{\frac{\sin(\phi_f + \delta')\ \sin(\phi_f - \beta')}{\sin(\theta - \delta')\ \sin(\theta + \beta')}}\right)^2 \qquad \boxed{\Gamma = 1.961}$$

$$k_{af} = \frac{\sin(\theta + \phi_f)^2}{\Gamma\ \sin(\theta)^2\ \sin(\theta - \delta')} \qquad \boxed{k_{af} = 0.409}$$

E14-3.4.2 Compute Unfactored Loads

The forces and moments are computed using Figure E14-3.4-1 by their appropriate LRFD load types **LRFD [Tables 3.4.1-1 and 3.4.1-2]**

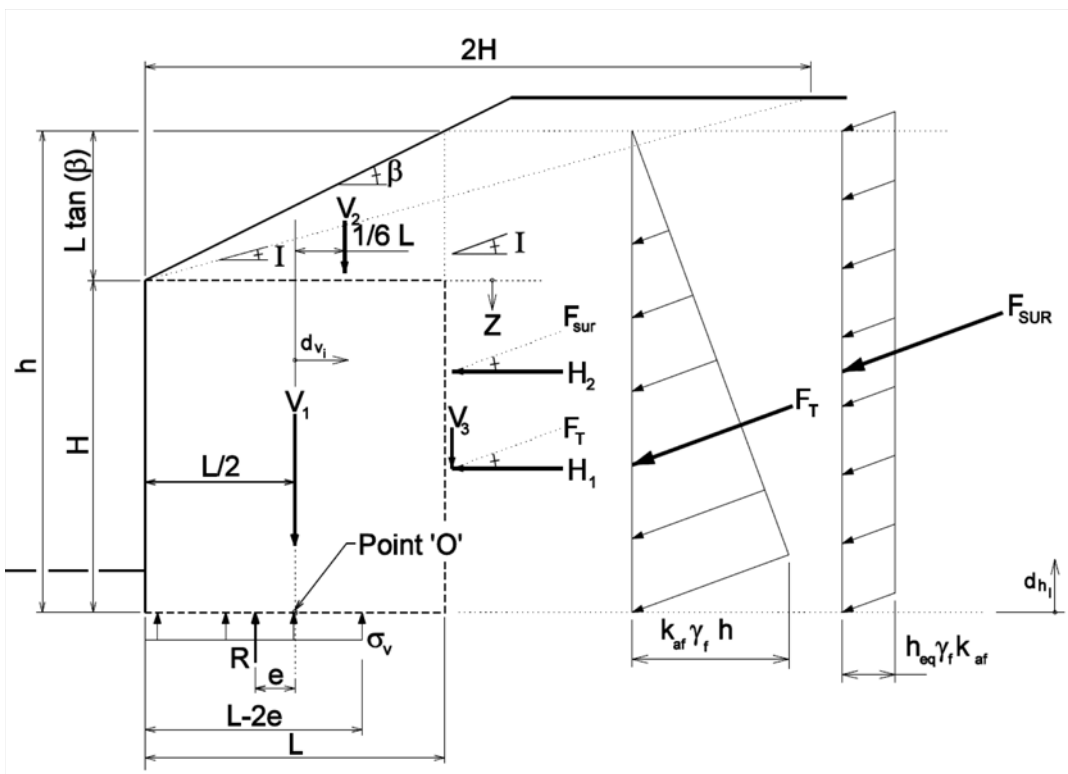

Figure E14-3.4-1
MSE Wall - External Stability

Active Earth Force Resultant, (kip/ft), F_T

$F_T = \frac{1}{2} \gamma_f h^2 k_{af}$ Active earth force resultant (EH) $F_T = 13.3$

Live Load Surcharge, (kip/ft), F_{SUR}

$F_{SUR} = h_{eq} \gamma_f h k_{af}$ Live load surcharge resultant (LS) $F_{SUR} = 2.3$

Vertical Loads, (kip/ft), V_i

$V_1 = \gamma_r H L$ Soil backfill - reinforced soil (EV) $V_1 = 27.8$

$V_2 = \frac{1}{2} \gamma_f L (L \tan(\beta))$ Soil backfill - backslope (EV) $V_2 = 6.3$

$V_3 = F_T \sin(I)$ Active earth force resultant (vertical component - EH) $V_3 = 4$

Moments produced from vertical loads about the center of reinforced soil, (kip-ft/ft) MV_i

Moment Arm		Moment	
$d_{v1} = 0$	$d_{v1} = 0.0$	$MV_1 = V_1 d_{v1}$	$MV_1 = 0.0$
$d_{v2} = \frac{1}{6}L$	$d_{v2} = 2.4$	$MV_2 = V_2 d_{v2}$	$MV_2 = 15.2$
$d_{v3} = \frac{L}{2}$	$d_{v3} = 7.3$	$MV_3 = V_3 d_{v3}$	$MV_3 = 28.7$

Horizontal Loads, (kip/ft), H_i

$H_1 = F_T \cos(I)$ Active earth force resultant (horizontal component - EH) $H_1 = 12.7$

$H_2 = F_{SUR} \cos(I)$ Live load surcharge resultant (LS) $H_2 = 2.2$

Moments produced from horizontal loads about the center of reinforced soil, (kip-ft/ft), MH

Moment Arm		Moment	
$d_{h1} = \frac{h}{3}$	$d_{h1} = 7.7$	$MH_1 = H_1\ d_{h1}$	$MH_1 = 98.0$
$d_{h2} = \frac{h}{2}$	$d_{h2} = 11.6$	$MH_2 = H_2\ d_{h2}$	$MH_2 = 25.3$

Summary of Unfactored Forces & Moments:

Load			Moment Arm		Moment		LRFD Load Type
Item	Description	Value (kip/ft)	Item	Value (ft)	Item	Value (kip-ft/ft)	
V_1	Soil backfill	27.80	d_{v1}	0.0	MV_1	0.0	EV
V_2	Soil backfill	6.30	d_{v2}	2.4	MV_2	15.2	EV
V_3	Active earth pressure	4.00	d_{v3}	7.3	MV_3	28.7	EH

Table E14-3.4-1
Unfactored Vertical Forces & Moments

Load			Moment Arm		Moment		LRFD Load Type
Item	Description	Value (kip/ft)	Item	Value (ft)	Item	Value (kip-ft/ft)	
H_1	Active earth pressure	12.70	d_{h1}	7.7	MH_1	98.0	EH
H_2	Live Load Surcharge	2.20	d_{h2}	11.6	MH_2	25.3	LS

Table E14-3.4-2
Unfactored Horizontal Forces & Moments

E14-3.4.3 Summarize Applicable Load and Resistance Factors

Maximum and minimum load factors shall be used to determine the extreme load effects. WisDOT's policy is to set all load modifiers to one ($n = 1.0$). Factored loads and moments for each limit state are calculated by applying the appropriate load factors **LRFD [Tables 3.4.1-1 and 3.4.1-2]**. The following load combinations will be used in this example:

Load Combination Limit State	EV	LS	EH
Strength Ia (minimum)	$\gamma_{EVmin} = 1.00$	$\gamma_{LSmin} = 1.75$	$\gamma_{EHmin} = 0.90$
Strength Ib (maximum)	$\gamma_{EVmax} = 1.35$	$\gamma_{LSmax} = 1.75$	$\gamma_{EHmax} = 1.50$
Service I (max/min)	$\gamma_{EV} = 1.00$	$\gamma_{LS} = 1.00$	$\gamma_{EH} = 1.00$

Load Combination	γ_{EV}	γ_{LS_V}	γ_{LS_H}	γ_{EH}	Application
Strength Ia	1.00	-	1.75	1.50	Sliding, Eccentricity
Strength Ib	1.35	1.75	1.75	1.50	Bearing, T_{max}
Service I	1.00	1.00	1.00	1.00	Pullout (σ_v)

Table E14-3.4-3
Load Combinations

Load Combination Assumptions:

- Live load surcharge stabilizing loads (if applicable) are ignored for overturning and sliding analyses. Live load surcharge is used to compute maximum bearing pressure, wall strength and overall (global) stability.
- Minimum horizontal earth pressure ,$\gamma_{EH(min)} = 0.9$, will not control in this example based on B/H and lateral load inclination, but should be checked.
- Component load factors shall remain consistent throughout calculations. For example, the active earth force resultant (F_T) can be broken into component forces of either $V_3\gamma_{EH(max)}$ and $H_1\gamma_{EH(max)}$ or $V_3\gamma_{EH(min)}$ and $H_1\gamma_{EH(min)}$, not $V_3\gamma_{EH(min)}$ and $H_1\gamma_{EH(max)}$.
- T_{max1} (Pullout) is calculated without live load and T_{max2} (Rupture) is calculated with live load.

The loads discussed and tabulated previously can now be factored by the appropriate load factors and combined to determine the governing limit states for each design check.

E14-3.4.4 Compute Factored Loads and Moments

Unfactored loads by load type (kip/ft)

$V_{EV} = V_1 + V_2$ $\boxed{V_{EV} = 34.1}$

$V_{EH} = V_3$ $\boxed{V_{EH} = 4.0}$

$H_{EH} = H_1$ $\boxed{H_{EH} = 12.7}$

$H_{LS} = H_2$ $\boxed{H_{LS} = 2.2}$

Unfactored moments by load type (kip-ft/ft)

$M_{EV} = MV_1 + MV_2$ $\boxed{M_{EV} = 15.2}$

$M_{EH1} = MV_3$ $\boxed{M_{EH1} = 28.7}$

$M_{EH2} = MH_1$ $\boxed{M_{EH2} = 98.0}$

$M_{LS2} = MH_2$ $\boxed{M_{LS2} = 25.3}$

Factored vertical loads by limit state (kip/ft)

$V_Ia = n\left(1.00V_{EV} + 1.50\ V_{EH}\right)$ $\boxed{V_Ia = 40.1}$

$V_Ib = n\left(1.35V_{EV} + 1.50\ V_{EH}\right)$ $\boxed{V_Ib = 52.0}$

$V_Ser = n\left(1.00V_{EV} + 1.00\ V_{EH}\right)$ $\boxed{V_Ser = 38.1}$

Factored horizontal loads by limit state (kip/ft)

$H_Ia = n\left(1.75H_{LS} + 1.50H_{EH}\right)$ $\boxed{H_Ia = 22.8}$

$H_Ib = n\left(1.75H_{LS} + 1.50H_{EH}\right)$ $\boxed{H_Ib = 22.8}$

$H_Ser = n\left(1.00H_{LS} + 1.00H_{EH}\right)$ $\boxed{H_Ser = 14.8}$

Factored moments produced by vertical Loads by limit state (kip-ft/ft)

$MV_Ia = n\left(1.00M_{EV} + 1.50\ M_{EH1}\right)$ $\boxed{MV_Ia = 58.2}$

$MV_Ib = n\left(1.35M_{EV} + 1.50\ M_{EH1}\right)$ $\boxed{MV_Ib = 63.6}$

$MV_Ser = n\left(1.00M_{EV} + 1.00\ M_{EH1}\right)$ $\boxed{MV_Ser = 43.9}$

Factored moments produced by horizontal loads by limit state (kip-ft/ft)

$MH_Ia = n\left(1.75M_{LS2} + 1.50\ M_{EH2}\right)$ $\boxed{MH_Ia = 191.3}$

$MH_Ib = n\left(1.75M_{LS2} + 1.50\ M_{EH2}\right)$ $\boxed{MH_Ib = 191.3}$

$MH_Ser = n\left(1.00M_{LS2} + 1.00\ M_{EH2}\right)$ $\boxed{MH_Ser = 123.3}$

Summary of Factored Forces & Moments:

Load Combination	Vert. Loads V (kips/ft)	Moments MV (kip-kip/ft)	Horiz. Loads H (kips/ft)	Moments MH (kip-kip/ft)
Strength Ia	40.1	58.2	22.8	191.3
Strength Ib	52.0	63.6	22.8	191.3
Service I	38.1	43.9	14.8	123.3

Table E14-3.4-4
Summary of Factored Loads & Moments

E14-3.5 Evaluate External Stability of MSE Wall

Three potential external failure mechanisms will be considered in this example (sliding at the base, limiting eccentricity and bearing resistance). Overall (global) stability requirements are not included here. Design calculations will be carried out for the governing limit states only.

E14-3.5.1 Sliding Resistance at Base of MSE Wall

The following calculations are based on **Strength Ia**:

Factored Sliding Force

$R_u = H_Ia$ $\boxed{R_u = 22.8}$ kip/ft

Sliding Resistance

To compute the coefficient of sliding friction for continuous reinforcement use the lesser friction angle of the reinforced back fill, ϕ_r , or the foundation soil, ϕ_{fd}, **LRFD [11.10.5.3]**.

$\phi_\mu = \min(\phi_r, \phi_{fd})$ $\boxed{\phi_\mu = 30 \text{ deg}}$

Note: Since continuous reinforcement is used, a slip plane may occur at the reinforcement layer. The sliding friction angle for this case shall use the lesser of (when applicable) ϕ_r, ϕ_{fd}, and ρ. Where ρ is the soil-reinforcement interface friction angle. Without specific data ρ may equal 2/3 ϕ_f with ϕ_f a maximum of 30 degrees. This check is not made in this example, but is required.

$\mu = \tan(\phi_\mu)$ $\boxed{\mu = 0.577}$

$V_Ia = 40.1$ Factored vertical load, kip/ft

$V_{Nm} = \mu\ V_Ia$ $\boxed{V_{Nm} = 23.1}$ kip/ft

$\phi_s = 1.00$

$R_R = \phi_s\ V_{Nm}$ $\boxed{R_R = 23.1}$ kip/ft

Capacity:Demand Ratio (CDR)

$$CDR_{Sliding} = \frac{R_R}{R_u}$$ $CDR_{Sliding} = 1.02$

Is the $CDR \geq 1.0$? check = "OK"

E14-3.5.2 Limiting Eccentricity at Base of MSE Wall

The location of the resultant of the reaction forces is limited to the middle two-thirds of the base width for a soil foundation (i.e., e_{max} = L/3) **LRFD [11.6.3.3]**. The following calculations are based on **Strength Ia**.

Maximum eccentricity

$$e_{max} = \frac{L}{3}$$ $e_{max} = 4.83$ ft

Compute wall eccentricity (distance from Point 'O' Figure E14-3.4-1)

$\Sigma M_R = MV_Ia$ Summation of resisting moments for Strength Ia

$\Sigma M_O = MH_Ia$ Summation of overturning moments for Strength Ia

$\Sigma V = V_Ia$ Summation of vertical loads for Strength Ia

$\Sigma M_R = 58.2$ kip-ft/ft

$\Sigma M_O = 191.3$ kip-ft/ft

$\Sigma V = 40.1$ kip/ft

$$e = \frac{\Sigma M_O - \Sigma M_R}{\Sigma V}$$ $e = 3.32$ ft

Capacity:Demand Ratio (CDR)

$$CDR_{Eccentricity} = \frac{e_{max}}{e}$$ $CDR_{Eccentricity} = 1.46$

Is the $CDR \geq 1.0$? check = "OK"

E14-3.5.3 Bearing Resistance at base of MSE Wall

The following calculations are based on **Strength Ib**:

Compute wall eccentricity (distance from Point 'O' Figure E14-3.4-1)

$\Sigma M_R = MV_Ib$ Summation of resisting moments for Strength Ib

$\Sigma M_O = MH_Ib$ Summation of overturning moments for Strength Ib

$\Sigma V = V_Ib$ Summation of vertical loads for Strength Ib

$\Sigma M_R = 63.6$ kip-ft/ft

$\Sigma M_O = 191.3$ kip-ft/ft

$\Sigma V = 52.0$ kip/ft

$$e = \frac{\Sigma M_O - \Sigma M_R}{\Sigma V}$$

$e = 2.46$ ft

Compute the ultimate bearing stress

σ_V = Ultimate bearing stress

L = Bearing length

e = Eccentricity (resultant produced by extreme bearing resistance loading)

Note: For the bearing resistance calculations the effective bearing width, B' = L-2e, is used instead of the actual width. Also, when the eccentricity, e, is negative: B'=L. The vertical stress is assumed to be uniformly distributed over the effective bearing width, B', since the wall is supported by a soil foundation **LRFD [11.6.3.2]**.

$$\sigma_V = \frac{\Sigma V}{L - 2\,e}$$

$\sigma_V = 5.43$ ksf/ft

Factored bearing resistance

$q_R = 6.50$ ksf/ft

<u>Capacity:Demand Ratio (CDR)</u>

$$CDR_{Bearing} = \frac{q_R}{\sigma_V}$$

$CDR_{Bearing} = 1.20$

Is the $CDR \geq 1.0$?

check = "OK"

E14-3.6 Evaluate Internal Stability of MSE Wall

Note: MSE walls are a proprietary wall system and the internal stability computations shall be performed by the wall supplier.

Internal stability shall be checked for 1) pullout and 2) rupture in accordance with **LRFD [11.10.6]**. The factored tensile load, T_{max}, is calculated twice for internal stability checks for vertical stress (σ_V) calculations. For pullout T_{max1} is determined by excluding live load surcharge. For rupture T_{max2} is determined by including live load surcharge. In this example, the maximum reinforcement loads are calculated using the Simplified Method.

The location of the potential failure surface for a MSE wall with metallic strip or grid reinforcements (inextensible) is shown in Figure E14-2.6-1.

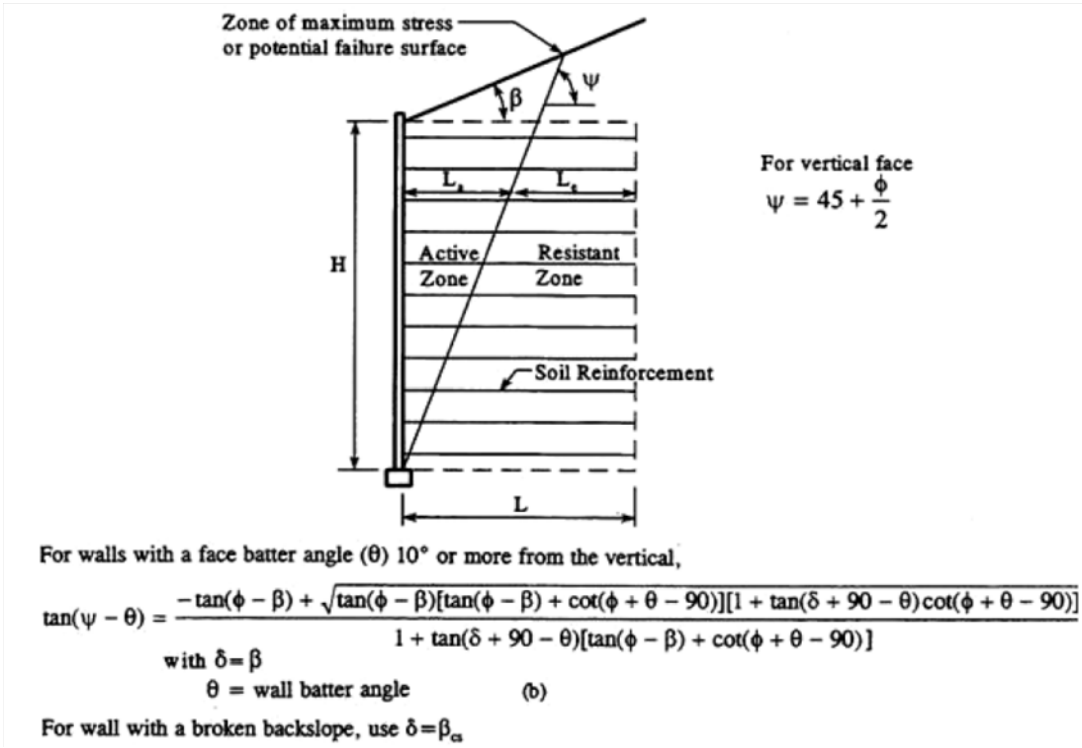

Figure E14-2.6-1
MSE Wall - Internal Stability (Extensible Reinforcement)
FHWA [Figure 4-9]

E14-3.6.1 Establish the Vertical Layout of Soil Reinforcement

Soil reinforcement layouts are shown in Table E14-3.6-1. They were determined by a standard block wall unit thickness of 8-in and a maximum vertical reinforcement spacing of 2.7-ft. The top and bottom level vertical spacing was adjusted to fit the height of the wall. Computations for determining the maximum tension, T_{max}, are taken at each level in the vertical layout.

$Layer = 3$ Layer of reinforcement (from top)

$Z = 3.333$ ft Depth below top of wall, ft

$S_V = 1.33$ ft Vertical spacing of reinforcement, ft

Calculate the upper and lower tributary depths based on the reinforcement vertical spacing

$$Z_{neg} = Z - \frac{S_V}{2} \qquad \boxed{Z_{neg} = 2.67} \text{ ft}$$

$$Z_{pos} = Z + \frac{S_V}{2} \qquad \boxed{Z_{pos} = 4.00} \text{ ft}$$

Layer	Z (ft)	Zneg (ft)	Zpos (ft)
1	0.67	0.00	1.33
2	2.00	1.33	2.67
3	3.33	2.67	4.00
4	4.67	4.00	5.33
5	6.00	5.33	6.67
6	7.33	6.67	8.00
7	8.67	8.00	9.33
8	10.00	9.33	10.67
9	11.33	10.67	12.00
10	12.67	12.00	13.33
11	14.00	13.33	14.67
12	15.33	14.67	16.00

Table E14-3.6-1
Vertical Layout of Soil Reinforcement

E14-3.6.2 Compute Horizontal Stress and Maximum Tension, T_{max}

Factored horizontal stress

$$\sigma_H = \gamma_P (\sigma_v k_r + \Delta\sigma_H) \quad \textbf{LRFD [Eq 11.10.6.2.1-1]}$$

γ_p = Load factor for vertical earth pressure (γ_{EVmax})
k_r = Horizontal pressure coefficient
σ_v = Pressure due to gravity and surcharge for pullout, T_{max1} ($\gamma_r Z_{trib}+\sigma_2$)
σ_v = Pressure due to gravity and surcharge for pullout resistance ($\gamma_r Z_{p\text{-}PO}$)
σ_v = Pressure due to gravity and surcharge for rupture, T_{max2} ($\gamma_r Z_{trib} + \sigma_2 + q$)
$\Delta\sigma_H$ = Horizontal pressure due to concentrated horizontal surcharge load
Z = Reinforcement depth for max stress Figure E14-2.6-2
Z_p = Depth of soil at reinforcement layer potential failure plane
$Z_{p\text{-}ave}$ = Average depth of soil at reinforcement layer in the effective zone
σ_2 = Equivalent uniform stress from backslope ($0.5(0.7)L\tan\beta)\gamma_f$
q = Surcharge load ($q = SUR$), ksf

To compute the lateral earth pressure coefficient, k_r , a k_a multiplier is used to determine k_r for each of the respective vertical tributary spacing depths (Z_{pos}, Z_{neg}). The k_a multiplier is determined using Figure E14-2.6-2. To calculate k_a it is assumed that $\delta=\beta$ and $\beta = 0$; thus,

$k_a=\tan^2(45-\phi_f/2)$ **LRFD [Eq C11.10.6.2.1-1]**

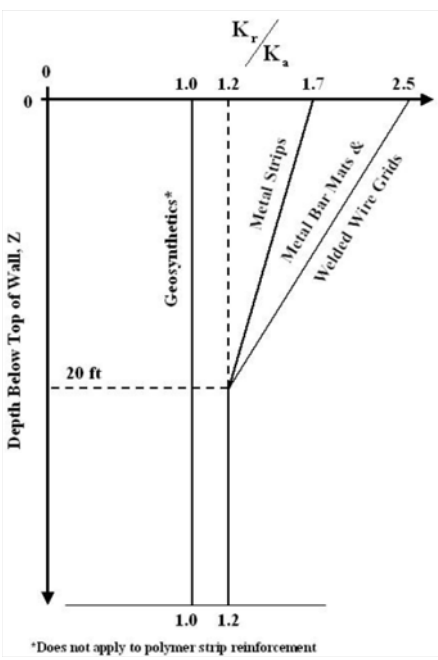

Figure E14-3.6-2
k_r/k_a Variation with MSE Wall Depth
FHWA [Figure 4-10]

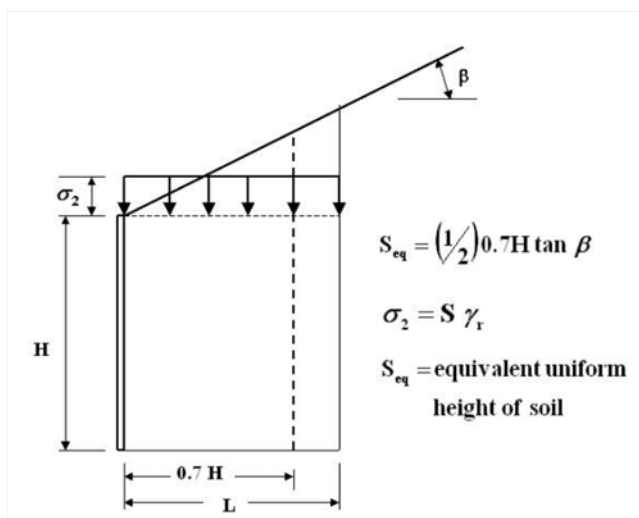

Figure E14-3.6-3
Calculation of Vertical Stress
FHWA [Figure 4-11]

Calculate the coefficient of active earth pressure, k_a

$$\phi_r = 30 \text{ deg}$$

$$k_a = \tan\left(45 \text{ deg} - \frac{\phi_r}{2}\right)^2 \qquad \boxed{k_a = 0.333}$$

The internal lateral earth pressure coefficient, k_r, for geogrids remains constant throughout the reinforced soil zone. k_r will be equal to $k_a(k_r/k_a) = k_a$ at any depth below the top of wall as shown in figure E14-3.6-2 **LRFD [Figure 11.10.6.2.2-3]**.

$$k_r = k_a \qquad \boxed{k_r = 0.333}$$

Compute effective (resisting) length, L_e

$$Z = 3.33 \quad \text{ft}$$

$$H = 16.00 \quad \text{ft}$$

$$L = 14.5 \quad \text{ft}$$

$$\psi = 45 \text{ deg} + \frac{\phi_r}{2} \qquad \boxed{\psi = 60.0 \text{ deg}}$$

$$L_a = \frac{H - Z}{\tan(\psi)} \qquad \boxed{L_a = 7.31}$$

$$L_e = \max(L - L_a, 3) \qquad \boxed{L_e = 7.19}$$

Note: L_e shall be greater than or equal to 3 ft **LRFD [11.10.6.3.2]**

E14-3.6.3 Establish Nominal and Factored Pullout Resistance of Soil Reinforcement

Compute the factored horizontal stress, σ_H, at Z by averaging the upper and lower tributary values (Z_{neg} and Z_{pos}). Since there is no horizontal stresses from concentrated dead loads values $\Delta\sigma_H$ is set to zero.

$$\sigma_H = \gamma_{EVmax}(\gamma_r Z_{trib} + \sigma_2)k_r$$

Surcharge loads

$$\sigma_2 = \frac{1}{2}\, 0.7\, H \tan(\beta)\, \gamma_f$$

$\sigma_2 = 0.336$ ksf/ft

Horizontal stress at Z_{neg} and Z_{pos}

$$\sigma_{H_neg} = \gamma_{EVmax}\left(\gamma_r Z_{neg} + \sigma_2\right) k_r$$

$\sigma_{H_neg} = 0.295$ ksf/ft

$$\sigma_{H_pos} = \gamma_{EVmax}\left(\gamma_r Z_{pos} + \sigma_2\right) k_r$$

$\sigma_{H_pos} = 0.367$ ksf/ft

Horizontal stress at Z

$$\sigma_H = 0.5\left(\sigma_{H_pos} + \sigma_{H_neg}\right)$$

$\sigma_H = 0.331$ ksf/ft

Compute the maximum tension, $T_{max\,1}$, at Z

$S_v = 1.33$ ft

$$T_{max1} = \sigma_H S_v\, 1000.$$

$T_{max1} = 441$ plf

Compute effective vertical stress for pullout resistance, σ_v

$$Z_{p_PO} = Z + 0.5 \tan(\beta)\left(L_a + L\right)$$

$Z_{p_PO} = 8.8$ ft

$\gamma_{EV} = 1.00$ Unfactored vertical stress for pullout resistance **LRFD [11.10.6.3.2]**

$$\sigma_v = \gamma_{EV}\, \gamma_r\, Z_{p_PO}\, 1000$$

$\sigma_v = 1054$ psf

Compute pullout resistance factor, F*

Pullout resistance factor, F*, for extensible geosynthetic reinforcement remains constant throughout the reinforced soil for determining the internal lateral earth pressure. Since no product-specific pullout test data is provided at the time of design F* and the scale effect correction factor,α, default values will be used per **LRFD [Figure 11.10.6.3.2-1 and Table 11.10.6.3.2-1]**.

Use default values for F' and α since product-specific pullout test data has not been provided.

$$F' = 0.67 \tan\left(\phi_r\right)$$

Pullout Friction Factor (Geogrids F*= 0.67tanϕ'_r Default value) **LRFD [Figure 11.10.6.3.2-1]**

$F' = 0.387$

Compute nominal pullout resistance, P_r

$\alpha = 0.8$	Scale effect correction factor (geogrids α = 0.8 default value) **LRFD [Table 11.10.6.3.2-1]**
$C = 2$	Overall reinforcement surface area geometry factor (geogrids C = 2.0) **LRFD [11.10.6.3.2]**
$R_c = 1$	Reinforcement coverage ratio (continuous reinforcement R_c = 1.0) **LRFD [11.10.6.4]**

$P_r = F' \alpha \sigma_v C R_c L_e$ $\boxed{P_r = 4690}$ plf

Compute factored pullout resistance, P_{rr}

$\phi_p = 0.9$

$P_{rr} = \phi_p P_r$ $\boxed{P_{rr} = 4221}$ plf

E14-3.6.4 Establish Nominal and Factored Long-term Tensile Resistance of Soil Reinforcement

Compute the factored horizontal stress, σ_H

$$\sigma_H = \gamma_{EVmax} (\gamma_r Z + \sigma_2 + q) k_r$$

Surcharge loads

$\boxed{\sigma_2 = 0.34}$ ksf/ft

$\boxed{q = 0.24}$ ksf/ft

Horizontal stress at Z_{neg} and Z_{pos}

$\sigma_{H_neg} = \gamma_{EVmax} (\gamma_r Z_{neg} + \sigma_2 + q) k_r$ $\boxed{\sigma_{H_neg} = 0.40}$ ksf/ft

$\sigma_{H_pos} = \gamma_{EVmax} (\gamma_r Z_{pos} + \sigma_2 + q) k_r$ $\boxed{\sigma_{H_pos} = 0.48}$ ksf/ft

Horizontal stress at Z

$\sigma_H = 0.5(\sigma_{H_pos} + \sigma_{H_neg})$ $\boxed{\sigma_H = 0.44}$ ksf/ft

Compute the maximum tension, T_{max2}, at Z

$S_v = 1.33$ ft

$T_{max2} = \sigma_H S_v 1000$ $\boxed{T_{max2} = 585}$ plf

$$T_r = \phi T_{al} = \phi T_{ult}/RF$$

T_r = Factored soil reinforcement tensile resistance
ϕ = Resistance factor
T_{al} = Nominal geosynthetic reinforcement strength
T_{ult} = Ultimate tensile strength
RF_{CR} = Creep reduction factor
RF_D = Durability reduction factor
RF_{ID} = Installation damage reduction factor
RF = Reduction factor (RF_{CR} x RF_D x RF_{ID})

The following calculation for determining the nominal long-term reinforcement tensile strength uses values similar to proprietary product specific data. In any application RF_{ID} nor RF_D shall not be less than 1.1. A single default reduction factor, RF, of 7 may be used for permanent applications if meeting the requirements listed in **LRFD [11.10.6.4.2b and Table 11.10.6.4.2b-1,Table 11.10.6.4.2b-1]**

	Geogrid Type		
	#1	#2	#3
T_{ult} (plf)	2500	5000	7500
RF_{CR}	2.00	2.00	2.00
RF_D	1.15	1.15	1.15
RF_{ID}	1.35	1.35	1.35

Table E14-3.6-2
Geogrid Resistance Properties

Grade = 1

T_{ult} = 2500 plf

RF_{CR} = 2.00

RF_D = 1.15

RF_{ID} = 1.35

$RF = RF_{CR}\ RF_D\ RF_{ID}$ $\boxed{RF = 3.11}$

$T_{al} = \dfrac{T_{ult}}{RF}$ $\boxed{T_{al} = 805}$ plf

$T_r = \phi_t\ T_{al}$ $\boxed{T_r = 725}$ plf

E14-3.6.5 Establish Grade of Soil Reinforcing Elements at Each Level

Based on Pullout Resistance

$$CDR_{pullout} = \frac{P_{rr}}{T_{max1}}$$

$CDR_{pullout} = 9.56$

Is the $CDR \geq 1.0$?

check = "OK"

Based on Tensile Resistance

$$CDR_{tensile} = \frac{T_r}{T_{max2}}$$

$CDR_{tensile} = 1.24$

Is the $CDR \geq 1.0$?

check = "OK"

Note: If the wall requires additional reinforcement the vertical spacing will be maintained and adjustments will be made to the grade (strength) for each layer accordingly.

E14-3.7 Summary of Results

E14-3.7.1 Summary of External Stability

Based on the defined project parameters, embedment depth and length of reinforcement the following external stability checks have been satisfied:

External Check	CDR
Sliding	1.02
Eccentricity	1.46
Bearing	1.20

Table E14-3.7-1
Summary of External Stability Computations

E14-3.7.2 Summary of Internal Stability

Computations for the grades of geogrid reinforcements at each level is presented in Table E14-3.7-2.

		Pullout			Rupture					
Level	Z	σ_H	T_{max1}	P_{rr}	Grade	σ_H	T_{max2}	T_r	CDR_p	CDR_t
1	0.67	187	250	2455	#1	295	394	725	9.84	1.84
2	2.00	259	346	3280	#1	367	490	725	9.49	1.48
3	3.33	331	442	4221	#1	439	586	725	9.56	1.24
4	4.67	403	538	5280	#1	511	682	725	9.82	1.06
5	6.00	475	634	6456	#2	583	778	1449	10.19	1.86
6	7.33	547	730	7750	#2	655	874	1449	10.62	1.66
7	8.67	619	826	9161	#2	727	970	1449	11.10	1.49
8	10.00	691	922	10690	#2	799	1066	1449	11.60	1.36
9	11.33	763	1018	12336	#2	871	1162	1449	12.12	1.25
10	12.67	835	1114	14099	#2	943	1258	1449	12.66	1.15
11	14.00	907	1210	15980	#2	1015	1354	1449	13.21	1.07
12	15.33	979	1306	17978	#3	1087	1450	2174	13.77	1.50

Table E14-3.7.2
Summary of Internal Stability Computations for Strength I Load Combinations

E14-3.8 Final MSE Wall Schematic

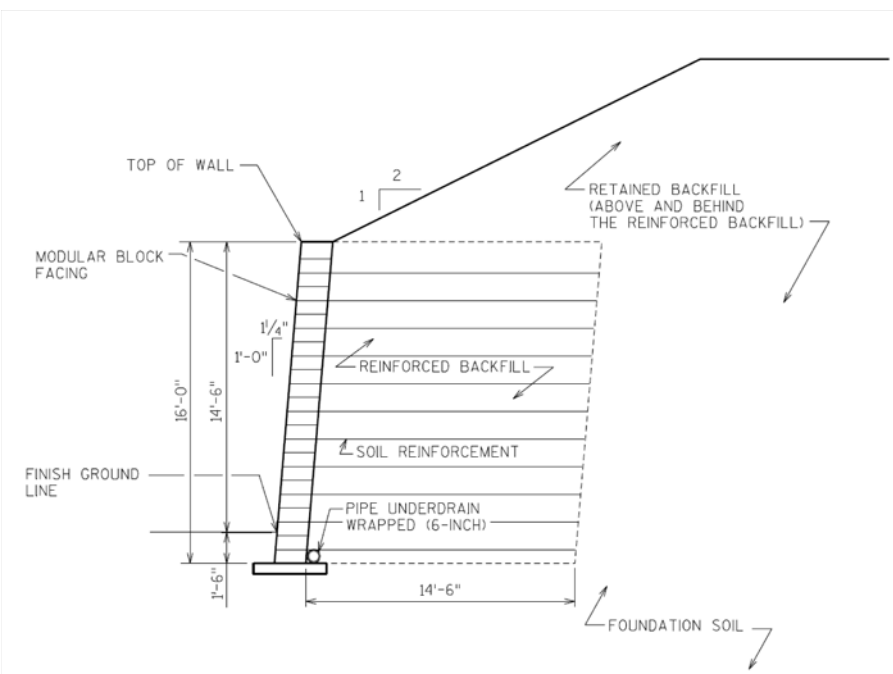

Figure E14-3.8-1
MSE Wall Schematic

Table of Contents

E14-4 Cast-In-Place Concrete Cantilever Wall on Piles, LRFD 2
E14-4.1 Establish Project Requirements 2
E14-4.2 Design Parameters 3
E14-4.3 Define Wall Geometry 4
E14-4.4 Permanent and Transient Loads 8
E14-4.4.1 Compute Active Earth Pressure Coefficient 8
E14-4.4.2 Compute Pile Group Properties 9
E14-4.4.3 Compute Unfactored Loads 10
E14-4.4.4 Summarize Applicable Load and Resistance Factors 14
E14-4.4.5 Compute Factored Loads and Moments 15
E14-4.5 Evaluate Pile Reactions 17
E14-4.6 Evaluate External Stability of Wall 19
E14-4.6.1 Pile Bearing Resistance 19
E14-4.6.2 Pile Sliding Resistance 20
E14-4.7 Evaluate Wall Structural Design 21
E14-4.7.1 Evaluate Wall Footing 21
E14-4.7.1.1 Evalute One-Way Shear 21
E14-4.7.1.2 Evaluate Two-Way Shear 24
E14-4.7.1.3 Evaluate Top Transverse Reinforcement Strength 25
E14-4.7.1.4 Evaluate Bottom Transverse Reinforcement Strength 27
E14-4.7.1.5 Evaluate Longitudinal Reinforcement Strength 29
E14-4.7.2 Evaluate Stem Strength 31
E14-4.7.2.1 Evaluate Stem Shear Strength at Footing 31
E14-4.7.2.2 Evaluate Stem Flexural Strength at Footing 32
E14-4.7.2.3 Transfer of Force at Base of Stem 34
E14-4.7.3 Temperature and Shrinkage Steel 34
E14-4.7.3.1 Temperature and Shrinkage Steel for Footing 34
E14-4.7.3.2 Temperature and Shrinkage Steel of Stem 35
E14-4.8 Summary of Results 36
E14-4.8.1 Summary of External Stability 36
E14-4.8.2 Summary of Wall Strength Design 36
E14-4.8.3 Drainage Design 36
E14-4.9 Final Cast-In-Place Concrete Wall Schematic 37

E14-4 Cast-In-Place Concrete Cantilever Wall on Piles, LRFD

General

This example shows design calculations for a cast-in-place (CIP) concrete wall supported on piles conforming to the LRFD Bridge Design Specifications and the WisDOT Bridge Manual. ***(Example is current through LRFD Seventh Edition - 2016 Interim)***

Sample design calculations for pile capacities and wall strength design will be presented. The overall stability and settlement calculations will not be shown in this example, but are required.

Design steps presented in 14.5.2.1 are used for the wall design.

E14-4.1 Establish Project Requirements

The CIP concrete wall shown in Figure E14-4.1-1 will be designed appropriately to accommodate a horizontal backslope. External stability, overall stability and wall strength are the designer's (WisDOT/Consultant) responsibility.

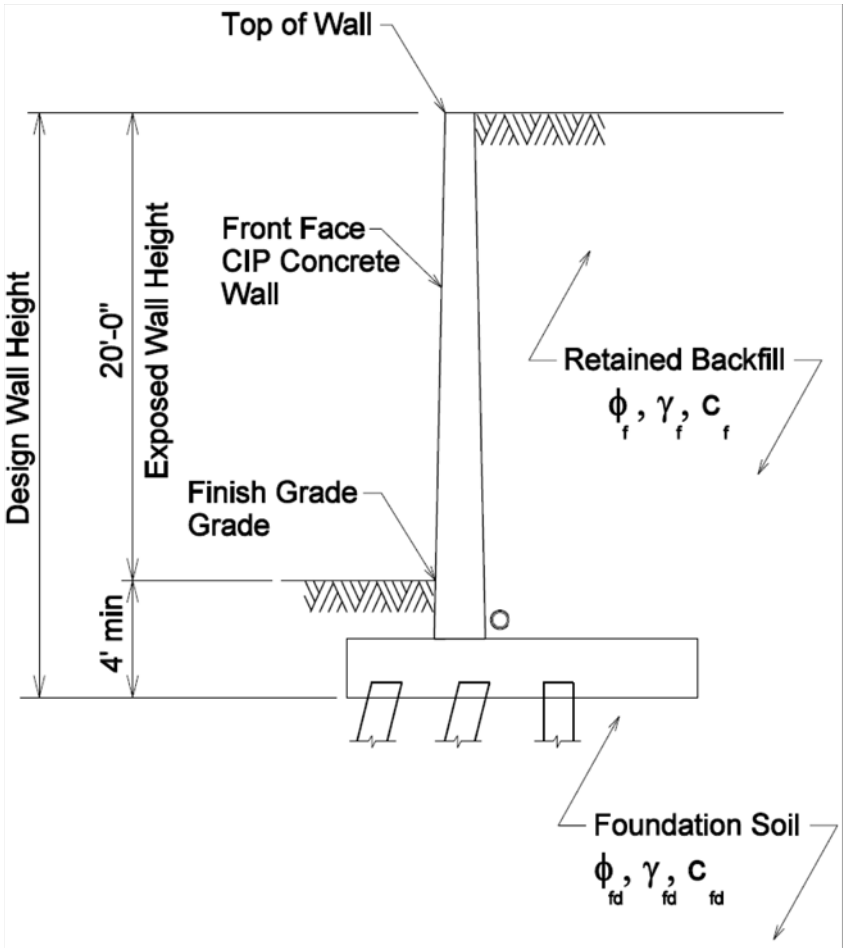

Figure E14-4.1-1
CIP Concrete Wall on Piles

E14-4.2 Design Parameters

Project Parameters

$Design_Life = 75$ years — Wall design life (min) **LRFD [11.5.1]**

Soil Properties (From Geotechnical Site Investigation Report)

Designer to determine if long-term or short-term soil strength parameters govern external stability.

Backfill Soil Design Parameters

$\phi_f = 32$ deg — Angle of internal friction

$\gamma_f = 0.120$ — Unit weight, kcf

$c_f = 0$ — Cohesion, ksf

$\delta = 17$ deg — Friction angle between fill and wall

Note: Per WisDOT Bridge Manual and Standard Specifications, structural backfill shall be granular and non-expansive.

ϕ_f= 32 degrees is used for this example, however ϕ_f=30 degrees is the maximum that should be used without testing.

Foundation Soil Design Parameters

$\phi_{fd} = 29$ deg — Angle of internal friction

$\gamma_{fd} = 0.110$ — Unit of weight, kcf

$c_{fd} = 0$ — Cohesion, ksf

Reinforced Concrete Parameters

$f'_c = 3.5$ — Concrete compressive design strength, ksi (14.5.9)

$\gamma_c = 0.150$ $\quad w_c = \gamma_c$ — Unit weight of concrete, ksf

$E_c = 33000\, w_c^{1.5} \sqrt{f'_c}$ — Modulus of elasticity of concrete, ksi **LRFD [C5.4.2.4]**

$\boxed{E_c = 3587}$ ksi

$f_y = 60$ — Yield strength of reinforcing bars, ksi (14.5.9)

$E_s = 29000$ — Modulus of elasticity of reinforcing bars, ksi

Live Load Surcharge Parameters

Live load surcharge shall be used when vehicular load is located within H/2 of the backface of the wall **LRFD [3.11.6.4].** The equivalent height of soil for vehicular load, H_{eq}, used for surcharge loads shall be in accordance to **LRFD [Table 3.11.6.4-2]**. However, WisDOT policy for most cases requires an equivalent height of 2.0 feet. The following procedure is used for determining live load surcharge:

$L_{traffic} = 100.00$ Distance from wall backface to edge of traffic, ft

$\frac{H}{2} = 12.00$ Distance from wall backface where live load surcharge shall be considered in the wall design, ft

Note: The wall height used is the exposed height plus an assumed 4 feet embedment ($H=H_e+4$ feet).

Shall live load surcharge be included? check = "NO"

$h_{eq} = 0.833$ Equivalent height of soil for surcharge load, ft (14.4.5.4.2)

WisDOT Policy: Wall with live load from traffic use 2.0 feet (240 psf) and walls without traffic use 0.833 feet (100 psf)

E14-4.3 Define Wall Geometry

Wall Geometry

$H_e = 20.00$ Exposed wall height, ft

$D_f = 4.00$ Footing cover, ft (WisDOT policy 4'-0" minimum)

$H = H_e + D_f$ Design wall height, ft

$T_t = 1.00$ Stem thickness at top of wall, ft

$b_1 = 0.25$ Front wall batter, in/ft (b_1H:12V)

$b_2 = 0.50$ Back wall batter, in/ft (b_2H:12V)

$\beta = 0.00$ deg Inclination of ground slope behind face of wall, deg (horizontal)

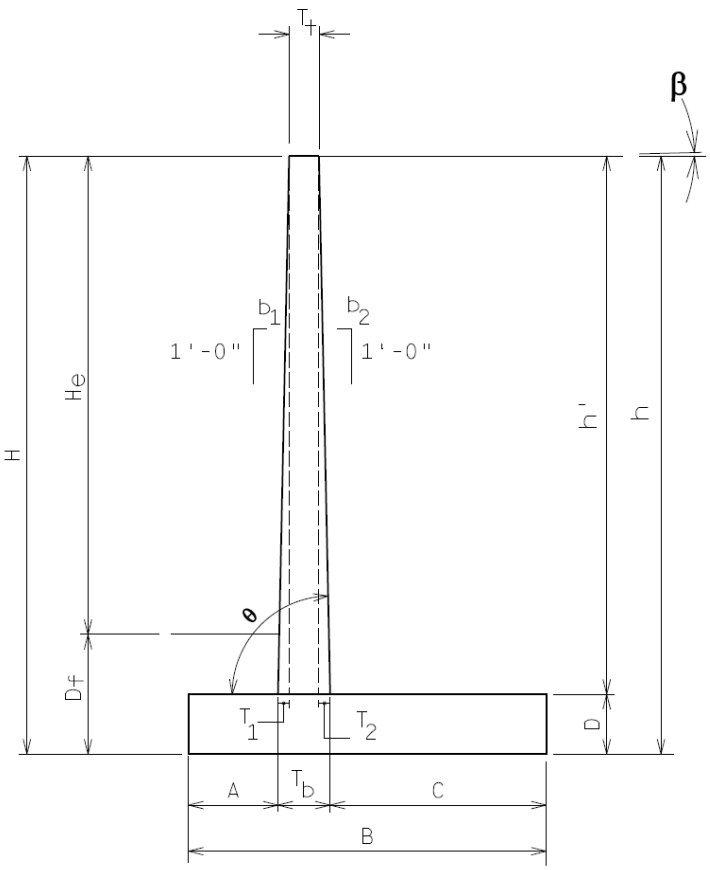

Figure E14-4.3-1
CIP Concrete Wall Geometry

Preliminary Wall Dimensioning

Selecting the most optimal wall configuration is an iterative process and depends on site conditions, cost considerations, wall geometry and aesthetics. For this example, the iterative process has been completed and the final wall dimensions are used for design checks.

H = 24.0	Design wall height, ft
B = 12.00	Footing base width, ft (2/5H to 3/5H)
A = 4.75	Toe projection, ft (H/8 to H/5)
D = 2.50	Footing thickness, ft (H/8 to H/5)

WisDOT policy:

H≤10'-0"	D_{min}=1'-6"
H>10'-0"	D_{min}=2'-0"
On Piles	D_{min}=2'-0"

Other Wall Dimensioning

$h' = H - D$	Stem height, ft	$h' = 21.5$
$T_1 = b_1 \frac{h'}{12}$	Stem front batter width, ft	$T_1 = 0.448$
$T_2 = b_2 \frac{h'}{12}$	Stem back batter width, ft	$T_2 = 0.896$
$T_b = T_1 + T_t + T_2$	Stem thickness at bottom of wall, ft	$T_b = 2.34$
$C = B - A - T_b$	Heel projection, ft	$C = 4.91$
$\theta = \text{atan}\left(\frac{12}{b_2}\right)$	Angle of back face of wall to horizontal	$\theta = 87.6$ deg
$b = 12$	Concrete strip width for design, in	
$h = H + (T_2 + C)\tan(\beta)$	Retained soil height, ft	$h = 24.0$

Pile Dimensioning

$y_{p1} = 1.25$	Distance from Point 'O' to centerline pile row 1, ft
$PS1 = 2.75$	Distance from centerline pile row 1 to centerline pile row 2, ft
$PS2 = 3.00$	Distance from centerline pile row 2 to centerline pile row 3, ft
$P_1 = 8.00$	Spacing between piles in row 1, ft
$P_2 = 8.00$	Spacing between piles in row 2, ft
$P_3 = 8.00$	Spacing between piles in row 3, ft

Pile Parameters (From Geotechnical Site Investigation Report, assuming HP12x53)

$Pile_Axial = 220$	Pile axial capacity (factored), kips
$pile_batter = 4$	Pile batter (pile_batterV:1H)
$H_{r1} = 11$	Pile row 1 lateral capacity (factored), kips*
$H_{r2} = 11$	Pile row 2 lateral capacity (factored), kips*
$H_{r3} = 14$	Pile row 3 lateral capacity (factored), kips*
$B_{xx} = 12.05$	Pile flange width (normal to wall alignment) dimension, in
$B_{yy} = 11.78$	Pile depth (perpendicular to wall alignment) dimension, in

* Based on LPILE or Broms' Method ϕ=1.0

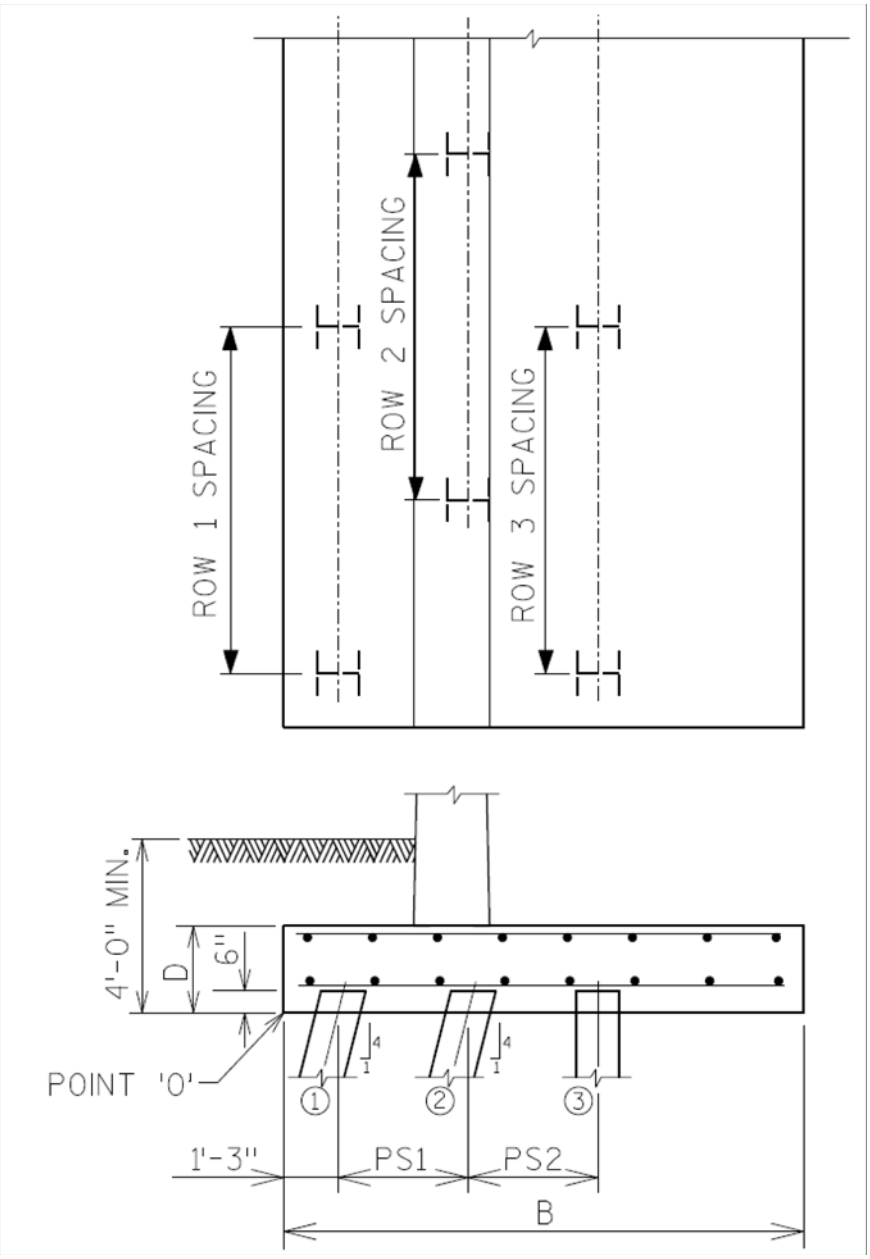

Figure E14-4.3-2
CIP Concrete Pile Geometry

E14-4.4 Permanent and Transient Loads

In this example, load types DC (dead load components), EV (vertical earth pressure), EH (horizontal earth pressure) and LS (live load surcharge) will be used. Passive resistance of the footing will be ignored.

E14-4.4.1 Compute Active Earth Pressure Coefficient

Compute the coefficient of active earth pressure using Coulomb Theory
LRFD [Eq 3.11.5.3-1]

$\phi_f = 32.0$ deg

$\beta = 0.0$ deg

$\theta = 87.6$ deg

$\delta = 17.0$ deg

$$k_a = \frac{\sin(\theta + \phi_f)^2}{\Gamma \sin(\theta)^2 \sin(\theta - \delta)}$$

$$\Gamma = \left(1 + \sqrt{\frac{\sin(\phi_f + \delta)\ \sin(\phi_f - \beta)}{\sin(\theta - \delta)\ \sin(\theta + \beta)}}\right)^2 \qquad \boxed{\Gamma = 2.727}$$

$$k_a = \frac{\sin(\theta + \phi_f)^2}{\Gamma \sin(\theta)^2 \sin(\theta - \delta)} \qquad \boxed{k_a = 0.294}$$

E14-4.4.2 Compute Pile Group Properties

Compute the distance from Point 'O' to the pile row centerlines

$y_{p1} = 1.25$ $\boxed{y_{p1} = 1.25}$ ft

$y_{p2} = y_{p1} + PS1$ $\boxed{y_{p2} = 4.00}$ ft

$y_{p3} = y_{p1} + PS1 + PS2$ $\boxed{y_{p3} = 7.00}$ ft

Compute the effective number of piles in each pile row and overall

$$NP_1 = \begin{cases} \dfrac{1}{P_1} & \text{if } P_1 > 0 \\ 0 & \text{otherwise} \end{cases}$$ $\boxed{NP_1 = 0.13}$ piles/ft

$$NP_2 = \begin{cases} \dfrac{1}{P_2} & \text{if } P_2 > 0 \\ 0 & \text{otherwise} \end{cases}$$ $\boxed{NP_2 = 0.13}$ piles/ft

$$NP_3 = \begin{cases} \dfrac{1}{P_3} & \text{if } P_3 > 0 \\ 0 & \text{otherwise} \end{cases}$$ $\boxed{NP_3 = 0.13}$ piles/ft

$NP = NP_1 + NP_2 + NP_3$ $\boxed{NP = 0.38}$ piles/ft

Compute the centroid of the pile group

$$yy = \begin{cases} \dfrac{y_{p1}\,NP_1 + y_{p2}\,NP_2 + y_{p3}\,NP_3}{NP} & \text{if } NP > 0 \\ 0 & \text{otherwise} \end{cases}$$ $\boxed{yy = 4.08}$ ft

Compute the distance from the centroid to the pile row

$d_{p1} = yy - y_{p1}$ $\boxed{d_{p1} = 2.83}$ ft

$d_{p2} = yy - y_{p2}$ $\boxed{d_{p2} = 0.08}$ ft

$d_{p3} = yy - y_{p3}$ $\boxed{d_{p3} = -2.92}$ ft

Compute the section modulus for each of the pile rows

$$Sxx_1 = \frac{NP_1\,d_{p1}^2 + NP_2\,d_{p2}^2 + NP_3\,d_{p3}^2}{d_{p1}}$$ $\boxed{Sxx_1 = 0.73}$

$$Sxx_2 = \frac{NP_1\,d_{p1}^2 + NP_2\,d_{p2}^2 + NP_3\,d_{p3}^2}{d_{p2}}$$ $\boxed{Sxx_2 = 24.81}$

$$Sxx_3 = \frac{NP_1\,d_{p1}^2 + NP_2\,d_{p2}^2 + NP_3\,d_{p3}^2}{d_{p3}}$$ $\boxed{Sxx_3 = -0.71}$

E14-4.4.3 Compute Unfactored Loads

The forces and moments are computed by using Figures E14-1.3-1 and E14-1.3-3 and by their respective load types **LRFD [Tables 3.4.1-1 and 3.4.1-2]**

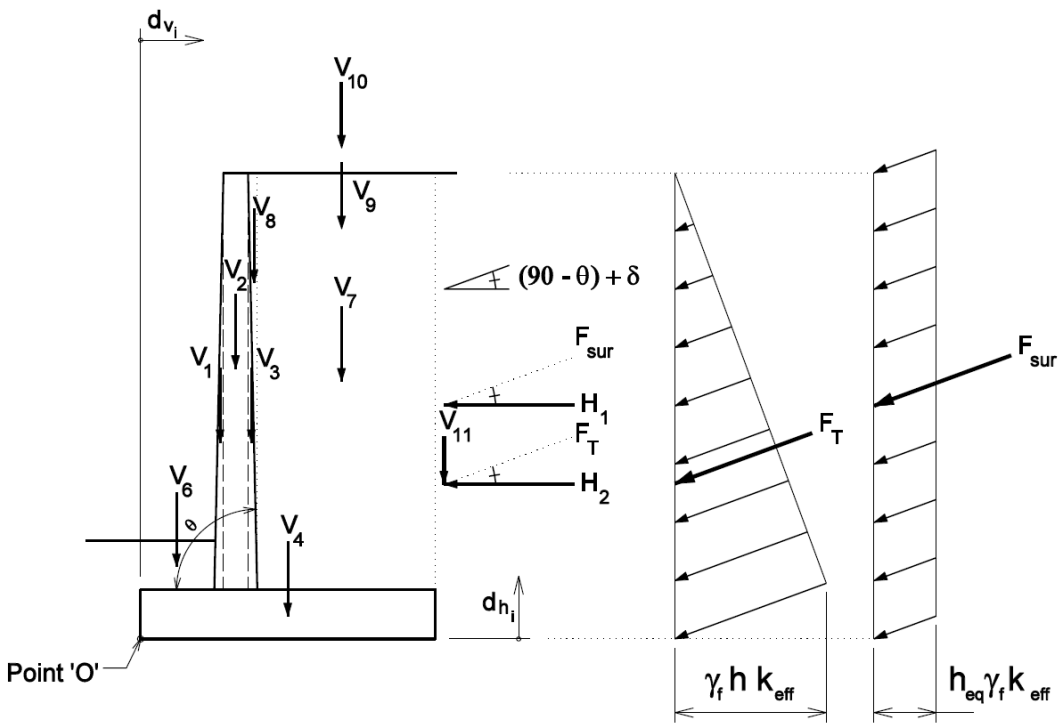

Figure E14-4.4-1
CIP Concrete Wall - External Stability

Active Earth Force Resultant (kip/ft), F_T

$$F_T = \frac{1}{2} \gamma_f h^2 k_a$$

Active earth force resultant (EH) $\boxed{F_T = 10.17}$

Live Load Surcharge Load (kip/ft), F_{sur}

$$F_{sur} = \gamma_f h_{eq} h k_a$$

Live load surcharge resultant (LS) $\boxed{F_{sur} = 0.71}$

Vertical Loads (kip/ft), V_i

$$V_1 = \frac{1}{2} T_1 h' \gamma_c$$

Wall stem front batter (DC) $\boxed{V_1 = 0.72}$

$$V_2 = T_t h' \gamma_c$$

Wall stem (DC) $\boxed{V_2 = 3.23}$

$V_3 = \frac{1}{2} T_2\ h'\ \gamma_c$ Wall stem back batter (DC) $\boxed{V_3 = 1.44}$

$V_4 = D\ B\ \gamma_c$ Wall footing (DC) $\boxed{V_4 = 4.50}$

$V_6 = A\left(D_f - D\right)\gamma_{fd}$ Soil backfill - toe (EV) $\boxed{V_6 = 0.78}$

$V_7 = C\ h'\ \gamma_f$ Soil backfill - heel (EV) $\boxed{V_7 = 12.66}$

$V_8 = \frac{1}{2}\ T_2\ h'\ \gamma_f$ Soil backfill - batter (EV) $\boxed{V_8 = 1.16}$

$V_9 = \frac{1}{2}\left(T_2 + C\right)\left[\left(T_2 + C\right)\tan(\beta)\right]\gamma_f$

Soil backfill - backslope (EV) $\boxed{V_9 = 0.00}$

$V_{10} = h_{eq}\left(T_2 + C\right)\gamma_f$

Live load surcharge (LS) $\boxed{V_{10} = 0.58}$

$V_{11} = F_T \sin[(90\ \text{deg} - \theta) + \delta]$

Active earth force resultant (vertical component - EH) $\boxed{V_{11} = 3.38}$

Moments produced from vertical loads about Point 'O' (kip-ft/ft), MV_i

Moment Arm (ft)		Moment (kip-ft/ft)	
$d_{v1} = A + \frac{2}{3}\ T_1$	$\boxed{d_{v1} = 5.0}$	$MV_1 = V_1\ d_{v1}$	$\boxed{MV_1 = 3.6}$
$d_{v2} = A + T_1 + \frac{T_t}{2}$	$\boxed{d_{v2} = 5.7}$	$MV_2 = V_2\ d_{v2}$	$\boxed{MV_2 = 18.4}$
$d_{v3} = A + T_1 + T_t + \frac{T_2}{3}$	$\boxed{d_{v3} = 6.5}$	$MV_3 = V_3\ d_{v3}$	$\boxed{MV_3 = 9.4}$
$d_{v4} = \frac{B}{2}$	$\boxed{d_{v4} = 6.0}$	$MV_4 = V_4\ d_{v4}$	$\boxed{MV_4 = 27.0}$
$d_{v6} = \frac{A}{2}$	$\boxed{d_{v6} = 2.4}$	$MV_6 = V_6\ d_{v6}$	$\boxed{MV_6 = 1.9}$

$d_{v7} = B - \frac{C}{2}$ $\boxed{d_{v7} = 9.5}$ $MV_7 = V_7\ d_{v7}$ $\boxed{MV_7 = 120.8}$

$d_{v8} = A + T_1 + T_t + \frac{2T_2}{3}$ $\boxed{d_{v8} = 6.8}$ $MV_8 = V_8\ d_{v8}$ $\boxed{MV_8 = 7.9}$

$d_{v9} = A + T_1 + T_t + \frac{2\left(T_2 + C\right)}{3}$ $\boxed{d_{v9} = 10.1}$ $MV_9 = V_9\ d_{v9}$ $\boxed{MV_9 = 0.0}$

$d_{v10} = B - \left(\frac{T_2 + C}{2}\right)$ $\boxed{d_{v10} = 9.1}$ $MV_{10} = V_{10}\ d_{v10}$ $\boxed{MV_{10} = 5.3}$

$d_{v11} = B$ $\boxed{d_{v11} = 12.0}$ $MV_{11} = V_{11}\ d_{v11}$ $\boxed{MV_{11} = 40.5}$

Horizontal Loads (kip/ft), H_i

$H_1 = F_{sur} \cos[(90\ \text{deg} - \theta) + \delta]$ Live load surcharge (LS) $\boxed{H_1 = 0.67}$

$H_2 = F_T \cos[(90\ \text{deg} - \theta) + \delta]$ Active earth force (horizontal component) (EH) $\boxed{H_2 = 9.59}$

Moments produced from horizontal loads about about Point 'O' (kip-ft/ft), MH_i

Moment Arm (ft)		Moment (kip-ft/ft)	
$d_{h1} = \frac{h}{2}$	$\boxed{d_{h1} = 12.0}$	$MH_1 = H_1\ d_{h1}$	$\boxed{MH_1 = 8.0}$
$d_{h2} = \frac{h}{3}$	$\boxed{d_{h2} = 8.0}$	$MH_2 = H_2\ d_{h2}$	$\boxed{MH_2 = 76.8}$

Summary of Unfactored Forces & Moments:

Load			Moment Arm		Moment		LRFD Load Type
Item	Description	Value (kip/ft)	Item	Value (ft)	Item	Value (kip-ft/ft)	
V_1	Wall stem front batter	0.72	d_{v1}	5.0	MV_1	3.6	DC
V_2	Wall stem	3.23	d_{v2}	5.7	MV_2	18.4	DC
V_3	Wall stem back batter	1.44	d_{v3}	6.5	MV_3	9.4	DC
V_4	Wall footing	4.50	d_{v4}	6.0	MV_4	27.0	DC
V_6	Soil backfill - Toe	0.78	d_{v6}	2.4	MV_6	1.9	EV
V_7	Soil backfill - Heel	12.66	d_{v7}	9.5	MV_7	120.8	EV
V_8	Soil backfill - Batter	1.16	d_{v8}	6.8	MV_8	7.9	EV
V_9	Soil backfill - Backslope	0.00	d_{v9}	10.1	MV_9	0.0	EV
V_{10}	Live load surcharge	0.58	d_{v10}	9.1	MV_{10}	5.3	LS
V_{11}	Active earth pressure	3.38	d_{v11}	12.0	MV_{11}	40.5	EH

Table E14-4.4-1
Unfactored Vertical Forces & Moments

Load			Moment Arm		Moment		LRFD Load Type
Item	Description	Value (kip/ft)	Item	Value (ft)	Item	Value (kip-ft/ft)	
H_1	Live load surcharge	0.67	d_{h1}	12.0	MH_1	8.0	LS
H_2	Active earth force	9.59	d_{h2}	8.0	MH_2	76.8	EH

Table E14-4.4-2
Unfactored Horizontal Forces & Moments

E14-4.4.4 Summarize Applicable Load and Resistance Factors

Maximum and minimum load factors shall be used to determine the extreme load effects. WisDOT's policy is to set all the load modifiers to zero($n = 1.0$). Factored loads and moments for each limit state are calculated by applying the appropriate load factors **LRFD [Tables 3.4.1-1 and 3.4.1-2]**. The following load combinations will be used in this example:

Load Combination	γ_{DC}	γ_{EV}	γ_{LS_V}	γ_{LS_H}	γ_{EH}	Application
Strength Ia	0.90	1.00	-	1.75	1.50	Sliding, Eccentricity
Strength Ib	1.25	1.35	1.75	1.75	1.50	Bearing, Wall Strength
Service I	1.00	1.00	1.00	1.00	1.00	Wall Crack Control

Table E14-4.4-3
Load Combinations

Load Combination Assumptions:

- Live load surcharge stabilizing loads (if applicable) are ignored for overturning and sliding analyses. Live load surcharge is used to compute maximum bearing pressure, wall strength and overall (global) stability.
- Minimum horizontal earth pressure ,$\gamma_{EH(min)}$ = 0.9, will not control in this example based on B/H and lateral load inclination, but should be checked.
- Component load factors shall remain consistent throughout calculations. For example, the active earth force resultant (F_T) can be broken into component forces of either $V_{10}\gamma_{EH(max)}$ and $H_2\gamma_{EH(max)}$ or $V_{10}\gamma_{EH(min)}$ and $H_2\gamma_{EH(min)}$, not $V_{10}\gamma_{EH(min)}$ and $H_2\gamma_{EH(max)}$.

The loads discussed and tabulated previously can now be factored by the appropriate load factors and combined to determine the governing limit states for each design check.

E14-4.4.5 Compute Factored Loads and Moments

Unfactored loads by load type (kip/ft)

$V_{DC} = V_1 + V_2 + V_3 + V_4$ $\boxed{V_{DC} = 9.9}$

$V_{EV} = V_6 + V_7 + V_8 + V_9$ $\boxed{V_{EV} = 14.6}$

$V_{LS} = V_{10}$ $\boxed{V_{LS} = 0.6}$

$V_{EH} = V_{11}$ $\boxed{V_{EH} = 3.4}$

$H_{LS} = H_1$ $\boxed{H_{LS} = 0.7}$

$H_{EH} = H_2$ $\boxed{H_{EH} = 9.6}$

Unfactored moments by load type (kip-ft/ft)

$M_{DC} = MV_1 + MV_2 + MV_3 + MV_4$ $\boxed{M_{DC} = 58.4}$

$M_{EV} = MV_6 + MV_7 + MV_8 + MV_9$ $\boxed{M_{EV} = 130.6}$

$M_{LS1} = MV_{10}$ $\boxed{M_{LS1} = 5.3}$

$M_{EH1} = MV_{11}$ $\boxed{M_{EH1} = 40.5}$

$M_{LS2} = MH_1$ $\boxed{M_{LS2} = 8.0}$

$M_{EH2} = MH_2$ $\boxed{M_{EH2} = 76.8}$

Factored vertical loads by limit state (kip/ft)

$V_Ia = n\left(0.90V_{DC} + 1.00V_{EV} + 0.00\ V_{LS} + 1.50\ V_{EH}\right)$ $\boxed{V_Ia = 28.6}$

$V_Ib = n\left(1.25V_{DC} + 1.35V_{EV} + 1.75\ V_{LS} + 1.50\ V_{EH}\right)$ $\boxed{V_Ib = 38.2}$

$V_Ser = n\left(1.00V_{DC} + 1.00V_{EV} + 1.00\ V_{LS} + 1.00\ V_{EH}\right)$ $\boxed{V_Ser = 28.4}$

Factored horizontal loads by limit state (kip/ft)

$H_Ia = n\left(1.75H_{LS} + 1.50H_{EH}\right)$ $\boxed{H_Ia = 15.6}$

$H_Ib = n\left(1.75H_{LS} + 1.50H_{EH}\right)$ $\boxed{H_Ib = 15.6}$

$H_Ser = n\left(1.00H_{LS} + 1.00H_{EH}\right)$ $\boxed{H_Ser = 10.3}$

Factored moments produced by vertical Loads by limit state (kip-ft/ft)

$MV_Ia = n\left(0.90M_{DC} + 1.00M_{EV} + 0.00M_{LS1} + 1.50\ M_{EH1}\right)$ $\boxed{MV_Ia = 243.9}$

$MV_Ib = n\left(1.25M_{DC} + 1.35M_{EV} + 1.75M_{LS1} + 1.50\ M_{EH1}\right)$ $\boxed{MV_Ib = 319.3}$

$MV_Ser = n\left(1.00M_{DC} + 1.00M_{EV} + 1.00M_{LS1} + 1.00\ M_{EH1}\right)$ $\boxed{MV_Ser = 234.8}$

Factored moments produced by horizontal loads by limit state (kip-ft/ft)

$MH_Ia = n\left(1.75M_{LS2} + 1.50\ M_{EH2}\right)$ $\boxed{MH_Ia = 129.1}$

$MH_Ib = n\left(1.75M_{LS2} + 1.50\ M_{EH2}\right)$ $\boxed{MH_Ib = 129.1}$

$MH_Ser = n\left(1.00M_{LS2} + 1.00\ M_{EH2}\right)$ $\boxed{MH_Ser = 84.8}$

Load Combination	Vert. Loads V (kips/ft)	Moments MV (kip-kip/ft)	Horiz. Loads H (kips/ft)	Moments MH (kip-kip/ft)
Strength Ia	28.6	243.9	15.6	129.1
Strength Ib	38.2	319.3	15.6	129.1
Service I	28.4	234.8	10.3	84.8

Table E14-4.4-4
Summary of Factored Loads & Moments

E14-4.5 Evaluate Pile Reactions

Calculated loads for each limit state:

Strength Ia	Strength Ib	Service	
$V_Ia = 28.56$	$V_Ib = 38.15$	$V_Ser = 28.45$	Vertical Load, kip/ft
$H_Ia = 15.56$	$H_Ib = 15.56$	$H_Ser = 10.26$	Horizontal Load, kip/ft
$MV_Ia = 243.90$	$MV_Ib = 319.27$	$MV_Ser = 234.76$	Moments (Vertical) kip-ft/ft
$MH_Ia = 129.13$	$MH_Ib = 129.13$	$MH_Ser = 84.75$	Moments (Horizontal), kip-ft/ft

Compute the eccentricity about Point 'O'

$$e_{toe_Ia} = \frac{MH_Ia - MV_Ia}{V_Ia}$$ Strength Ia $e_{toe_Ia} = -4.02$ ft

$$e_{toe_Ib} = \frac{MH_Ib - MV_Ib}{V_Ib}$$ Strength Ib $e_{toe_Ib} = -4.98$ ft

$$e_{toe_Ser} = \frac{MH_Ser - MV_Ser}{V_Ser}$$ Service $e_{toe_Ser} = -5.27$ ft

Compute the eccentricity about the neutral axis of the pile group

$e_{NA_Ia} = yy + e_{toe_Ia}$ Strength Ia $e_{NA_Ia} = 0.07$ ft

$e_{NA_Ib} = yy + e_{toe_Ib}$ Strength Ib $e_{NA_Ib} = -0.90$ ft

$e_{NA_Ser} = yy + e_{toe_Ser}$ Service $e_{NA_Ser} = -1.19$ ft

Compute the moment about the neutral axis of the pile group

$M_{NA_Ia} = V_Ia\ e_{NA_Ia}$ Strength Ia $M_{NA_Ia} = 1.9$ kip-ft/ft

$M_{NA_Ib} = V_Ib\ e_{NA_Ib}$ Strength Ib $M_{NA_Ib} = -34.4$ kip-ft/ft

$M_{NA_Ser} = V_Ser\ e_{NA_Ser}$ Service $M_{NA_Ser} = -33.9$ kip-ft/ft

Compute the pile reactions for each limit state

Strength Ia

$$P_{U1a} = \frac{V_Ia}{NP} + \frac{M_{NA_Ia}}{Sxx_1}$$ $P_{U1a} = 78.7$ kip/pile

$$P_{U2a} = \frac{V_Ia}{NP} + \frac{M_{NA_Ia}}{Sxx_2}$$ $P_{U2a} = 76.2$ kip/pile

$$P_{U3a} = \frac{V_Ia}{NP} + \frac{M_{NA_Ia}}{Sxx_3}$$ $P_{U3a} = 73.5$ kip/pile

Strength Ib

$$P_{U1b} = \frac{V_Ib}{NP} + \frac{M_{NA_Ib}}{Sxx_1}$$ $P_{U1b} = 54.6$ kip/pile

$$P_{U2b} = \frac{V_Ib}{NP} + \frac{M_{NA_Ib}}{Sxx_2}$$ $P_{U2b} = 100.4$ kip/pile

$$P_{U3b} = \frac{V_Ib}{NP} + \frac{M_{NA_Ib}}{Sxx_3}$$ $P_{U3b} = 150.2$ kip/pile

Service

$$P_{U1_Ser} = \frac{V_Ser}{NP} + \frac{M_{NA_Ser}}{Sxx_1}$$ $P_{U1_Ser} = 29.5$ kip/pile

$$P_{U2_Ser} = \frac{V_Ser}{NP} + \frac{M_{NA_Ser}}{Sxx_2}$$ $P_{U2_Ser} = 74.5$ kip/pile

$$P_{U3_Ser} = \frac{V_Ser}{NP} + \frac{M_{NA_Ser}}{Sxx_3}$$ $P_{U3_Ser} = 123.6$ kip/pile

Load Combination	Row 1 (kip/pile)	Row 2 (kip/pile)	Row 3 (kip/pile)
Strength Ia	78.7	76.2	73.5
Strength Ib	54.6	100.4	150.2
Service I	29.5	74.5	123.6

Table E14-4.5-1
Summary of Factored Pile Reactions (Vertical)

E14-4.6 Evaluate External Stability of Wall

Three potential external failure mechanisms will be considered in this example. These failures include pile bearing resistance, limiting eccentricity and lateral resistance. Global (overall) stability requirements are assumed to have been satisfied in prior calculations. Design calculations will be carried out for the governing limit states only.

E14-4.6.1 Pile Bearing Resistance

Axial and lateral pile capacities from Geotechnical Site Investigation Report:

$Pile_Axial = 220$ Pile axial capacity, kips

$pile_batter = 4$ Pile batter (pile_batter V:1H)

$H_{r1} = 11.00$ Battered pile row 1 lateral capacity, kips/pile

$H_{r2} = 11.00$ Battered pile row 2 lateral capacity, kips/pile

$H_{r3} = 14.00$ Vertical pile row 3 lateral capacity, kips/pile

Determine the horizontal and vertical components of the battered pile

$pile_angle = atan\left(\frac{1}{pile_batter}\right)$ $\boxed{pile_angle = 14.0\ deg}$

$P_{Rb_H} = Pile_Axial \sin(pile_angle)$ $\boxed{P_{Rb_H} = 53.4}$ kips/pile

$P_{Rb_V} = Pile_Axial \cos(pile_angle)$ $\boxed{P_{Rb_V} = 213.4}$ kips/pile

Calculate axial capacity of battered piles

$P_R = P_{Rb_V}$ $\boxed{P_R = 213.4}$ kips/pile

$P_u = \max(P_{U1a}, P_{U2a}, P_{U1b}, P_{U2b})$ $\boxed{P_u = 100.4}$ kips/pile

$CDR_{Brg_B_Pile} = \frac{P_R}{P_u}$ $\boxed{CDR_{Brg_B_Pile} = 2.13}$

Is the $CDR \geq 1.0$? $\boxed{check = \text{"OK"}}$

Calculate axial capacity of vertical piles

$P_R = Pile_Axial$ $\boxed{P_R = 220.0}$

$P_u = \max(P_{U3a}, P_{U3b})$ $\boxed{P_u = 150.2}$

$CDR_{Brg_V_Pile} = \frac{P_R}{P_u}$ $\boxed{CDR_{Brg_V_Pile} = 1.46}$

Is the $CDR \geq 1.0$? $\boxed{check = \text{"OK"}}$

E14-4.6.2 Pile Sliding Resistance

For sliding failure, the horizontal force effects, H_u, is checked against the sliding resistance, H_R, where $H_R = \phi H_n$. The following calculations are based on **Strength Ia**:

Factored Lateral Force, H_u

$H_u = H_Ia$ $\boxed{H_u = 15.6}$ kip/ft

Sliding Resistance, H_R

It is assumed that the P-y method was used for the pile analysis (LPILE), thus group effects shall be considered. Calculate sliding capacity of the effective pile group per **LRFD [Table-10.7.2.4-1]:**

$B_{yy} = 11.78$ Depth of pile, in

$$\frac{PS1 + PS2}{\frac{B_{yy}}{12}} = 5.86$$ Say:5B

Note: It was assumed that pile row 1 and 3 are aligned throughout the pile group and that pile row 2 will not effect the lateral pile group resistance. Pile row 1 and 3 will then be applied row 1 and 2 "5B" multipliers, respectfully.

"5B" Pile multipliers

$row1 = 1.00$

$row2 = 1.00$

$row3 = 0.80$

Lateral group resistance

$H_{R1} = row1\ H_{r1}\ NP_1 + row2\ H_{r2}\ NP_2 + row3\ H_{r3}\ NP_3$ $\boxed{H_{R1} = 4.15}$ kip/ft

Batter resistance

$H_{R2} = P_{Rb_H}\left(NP_1 + NP_2\right)$ $\boxed{H_{R2} = 13.34}$ kip/ft

Compute factored resistance against failure by sliding, R_R

$H_R = H_{R1} + H_{R2}$ $\boxed{H_R = 17.49}$ kip/ft

<u>Capacity:Demand Ratio (CDR)</u>

$$CDR_{Sliding} = \frac{H_R}{H_u}$$ $\boxed{CDR_{Sliding} = 1.12}$

Is the $CDR \geq 1.0$? $\boxed{check = \text{"OK"}}$

E14-4.7 Evaluate Wall Structural Design

Note: CIP concrete walls are a non-proprietary wall system and the structural design computations shall be performed by the wall designer.

Wall structural design computations for shear and flexure will be considered in this example. Crack control and temperature and shrinkage considerations will also be included.

E14-4.7.1 Evaluate Wall Footing

Investigate shear and moment requirements

E14-4.7.1.1 Evalute One-Way Shear

Design for one-way shear in only the transverse direction.

Compute the effective shear depth, d_v, for the heel:

$cover = 2.0$ in

$s = 9.0$ in (bar spacing)

$Bar_{No} = 7$ (transverse bar size)

$Bar_D = 0.875$ in (transverse bar diameter)

$Bar_A = 0.600$ in^2 (transverse bar area)

$$A_{s_heel} = \frac{Bar_A}{\frac{s}{12}}$$ $A_{s_heel} = 0.80$ in^2/ft

$$d_{s_heel} = D\ 12 - cover - \frac{Bar_D}{2}$$ $d_{s_heel} = 27.6$ in

$\alpha_1 = 0.85$ (for $f'_c \le 10.0$ ksi) **LRFD [5.7.2.2]**

$$a_heel = \frac{A_{s_heel}\ f_y}{\alpha_1\ f'_c\ b}$$ $a_heel = 1.3$ in

$$d_{v1} = d_{s_heel} - \frac{a_heel}{2}$$ $d_{v1} = 26.9$ in

$$d_{v2} = 0.9\ d_{s_heel}$$ $d_{v2} = 24.8$ in

$$d_{v3} = 0.72\ D\ 12$$ $d_{v3} = 21.6$ in

$$d_{v_heel} = \max(d_{v1}, d_{v2}, d_{v3})$$ $d_{v_heel} = 26.9$ in

Compute the effective shear depth, d_v, for the toe

$cover = 6.0$ in

$s = 9.0$ in (bar spacing)

$Bar_{No} = 7$ (transverse bar size)

$Bar_D = 0.88$ in (transverse bar diameter)

$Bar_A = 0.60$ in^2 (transverse bar area)

$$A_{s_toe} = \frac{Bar_A}{\frac{s}{12}}$$ $A_{s_toe} = 0.80$ in^2/ft

$$d_{s_toe} = D\ 12 - cover - \frac{Bar_D}{2}$$ $d_{s_toe} = 23.6$ in

$$a_toe = \frac{A_{s_toe}\ f_y}{\alpha_1\ f'_c\ b}$$ $a_toe = 1.3$ in

$$d_{v1} = d_{s_toe} - \frac{a_toe}{2}$$ $d_{v1} = 22.9$ in

$$d_{v2} = 0.9\ d_{s_toe}$$ $d_{v2} = 21.2$ in

$$d_{v_toe} = \max(d_{v1}, d_{v2})$$ $d_{v_toe} = 22.9$ in

Determine the distance from Point 'O' to the critical sections:

$$y_crit_toe = A\ 12 - d_{v_toe}$$ $y_crit_toe = 34.1$ in

$$y_crit_heel = B\ 12 - C\ 12 + d_{v_heel}$$ $y_crit_heel = 112.0$ in

Determine the distance from Point 'O' to the pile limits:

$$y_{v1_neg} = y_{p1}\ 12 - \frac{B_{yy}}{2}$$ $y_{v1_neg} = 9.1$ in

$$y_{v1_pos} = y_{p1}\ 12 + \frac{B_{yy}}{2}$$ $y_{v1_pos} = 20.9$ in

$$y_{v2_neg} = y_{p2}\ 12 - \frac{B_{yy}}{2}$$ $y_{v2_neg} = 42.1$ in

$$y_{v2_pos} = y_{p2}\ 12 + \frac{B_{yy}}{2}$$ $y_{v2_pos} = 53.9$ in

$$y_{v3_neg} = y_{p3}\ 12 - \frac{B_{yy}}{2}$$ $y_{v3_neg} = 78.1$ in

$$y_{v3_pos} = y_{p3}\ 12 + \frac{B_{yy}}{2}$$ $y_{v3_pos} = 89.9$ in

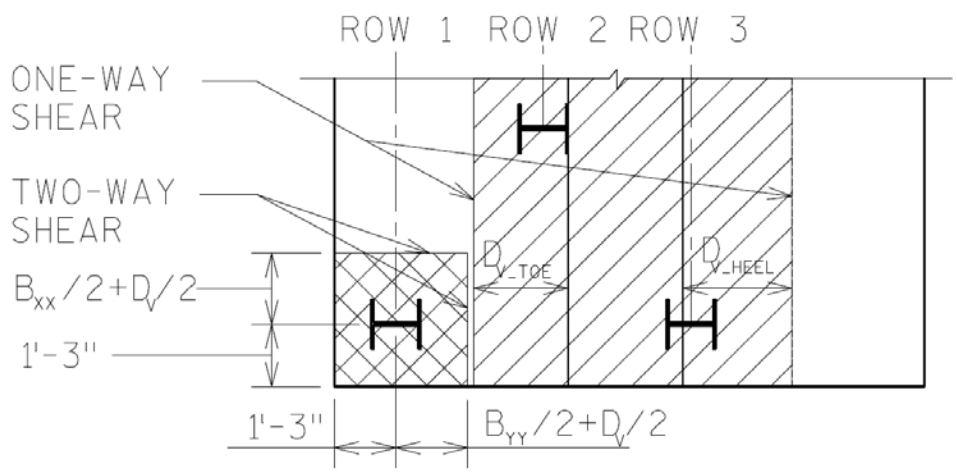

Figure E14-4.7-1
Partial Footing Plan for Critical Shear Sections

Determine if the pile rows are "Outside", "On", or "Inside" the critical sections

Since the pile row 1 falls "Outside" the critical sections, the full row pile reaction will be used for shear

$$P_{U1} = \max(P_{U1a}, P_{U1b})$$ $P_{U1} = 78.7$ kip

$$V_{u_Pile1} = 1.0\ (P_{U1}\ NP_1)$$ $V_{u_Pile1} = 9.8$ kip/ft

Since the pile row 2 and 3 falls "Inside" the critical sections, none of the row pile reactions will be used for shear

The load applied to the critical section is based on the proportion of the piles located outside of the critical toe or heel section. In this case, pile row 1 falls outside the toe critical section and the full row pile reaction will be used for shear.

$V_u = V_{u_Pile1}$ $\boxed{V_u = 9.8}$ kip/ft

Nominal shear resistance, V_n, is taken as the lesser of V_{n1} and V_{n2} **LRFD [5.8.3.3]**

$V_{n1} = V_c$ **LRFD [Eq 5.8.3.3-1]**

where: $V_c = 0.0316\ \beta\lambda\sqrt{f'_c}\ b_v\ d_v$

$V_{n2} = 0.25\ f'_c\ b_v\ d_v$ **LRFD [Eq 5.8.3.3-2]**

Nominal one-way action shear resistance for structures without transverse reinforcement, V_n, is taken as the lesser of V_{n1} and V_{n2}

$\beta = 2.0$ $\lambda = 1.0$ (normal wgt. conc.) **LRFD [5.4.2.8]**

$V_c = 0.0316\ \beta\ \lambda\sqrt{f'_c}\ b\ d_{v_toe}$ $\boxed{V_c = 32.5}$ kip/ft

$V_{n1} = V_c$ $\boxed{V_{n1} = 32.5}$ kip/ft

$V_{n2} = 0.25\ f'_c\ b\ d_{v_toe}$ $\boxed{V_{n2} = 240.3}$ kip/ft

$V_n = \min(V_{n1}, V_{n2})$ $\boxed{V_n = 32.5}$ kip/ft

$\phi_v = 0.90$

$V_r = \phi_v\ V_n$ $\boxed{V_r = 29.2}$ kip/ft

$\boxed{V_u = 9.8}$ kip/ft

Is V_u less than V_r? $\boxed{\text{check} = \text{"OK"}}$

E14-4.7.1.2 Evaluate Two-Way Shear

For two-way action around the maximum loaded pile, the pile critical perimeter, b_o, is located a minimum of $0.5d_v$ from the perimeter of the pile. If portions of the critical perimeter are located off the footing, that portion of the critical perimeter is limited by the footing edge.

Two-way action should be checked for the maximum loaded pile.

$V_u = \max(P_{U1a}, P_{U2a}, P_{U3a}, P_{U1b}, P_{U2b}, P_{U3b})$ $\boxed{V_u = 150.2}$ kip

Determine the location of the pile critical perimeter. Assume that the critical section is outside of the footing and only include the portion of the shear perimeter is located within the footing:

$$b_{o_xx} = 1.25\ 12 + \frac{B_{xx}}{2} + \frac{d_{v_toe}}{2}$$ $b_{o_xx} = 32.5$ in

$$b_{o_yy} = 1.25\ 12 + \frac{B_{yy}}{2} + \frac{d_{v_toe}}{2}$$ $b_{o_yy} = 32.3$ in

$$\beta_{c_pile} = \frac{b_{o_xx}}{b_{o_yy}}$$ $\beta_{c_pile} = 1.004$ in

$$b_{o_pile} = b_{o_xx} + b_{o_yy}$$ $b_{o_pile} = 64.8$ in

Nominal shear resistance, V_n, is taken as the lesser of V_{n1} and V_{n2} **LRFD [5.13.3.6.3]**

λ = 1.0 (normal wgt. conc.) **LRFD [5.4.2.8]**

$$V_{n1} = \left(0.063 + \frac{0.126}{\beta_{c_pile}}\right) \lambda \sqrt{f'_c}\ b_{o_pile}\ d_{v_toe}$$ $V_{n1} = 523.1$ kip/ft

$$V_{n2} = 0.126\ \lambda \sqrt{f'_c}\ b_{o_pile}\ d_{v_toe}$$ $V_{n2} = 349.7$ kip/ft

$$V_n = \min(V_{n1}, V_{n2})$$ $V_n = 349.7$ kip/ft

$$V_r = \phi_v V_n$$ $V_r = 314.7$ kip/ft

$V_u = 150.2$ kip/ft

Is V_u less than V_r? check = "OK"

E14-4.7.1.3 Evaluate Top Transverse Reinforcement Strength

Top transverse reinforcement strength is determined by assuming the heel acts as a cantilever member supporting its own weight and loads acting above it. Pile reactions may be used to decrease this load.

For **Strength Ib**:

$$V_u = 1.25\left(\frac{C}{B} V_4\right) + 1.35\left(V_7 + V_8 + V_9\right) + 1.75\left(V_{10}\right) + 1.50\left(V_{11}\right)$$

$V_u = 27.0$ kip/ft

$$M_u = V_u \frac{C}{2}$$ $M_u = 66.3$ kip-ft/ft

Calculated the capacity of the heel in flexure at the face of the stem:

$$M_n = A_{s_heel} f_y \left(d_{s_heel} - \frac{a_heel}{2}\right) \frac{1}{12}$$ $M_n = 107.6$ kip-ft/ft

Calculate the flexural resistance factor ϕ_F:

$\beta_1 = 0.85$

$c = \dfrac{a_heel}{\beta_1}$ $\boxed{c = 1.58}$ in

$$\phi_F = \begin{cases} 0.75 & \text{if } \dfrac{d_{s_heel}}{c} < \dfrac{5}{3} \\ 0.65 + 0.15\left(\dfrac{d_{s_heel}}{c} - 1\right) & \text{if } \dfrac{5}{3} \le \dfrac{d_{s_heel}}{c} \le \dfrac{8}{3} \\ 0.90 & \text{otherwise} \end{cases}$$

$\boxed{\phi_F = 0.90}$

based on f_y = 60 ksi, **LRFD [5.5.4.2.1], [Table C5.7.2.1-1]**

Note: if $\phi_F = 0.75$ Section is compression-controlled
if $0.75 < \phi_F < 0.90$ Section is in transition
if $\phi_F = 0.90$ Section is tension-controlled

Calculate the flexural factored resistance, M_r:

$M_r = \phi_F M_n$ $\boxed{M_r = 96.8}$ kip-ft/ft

$\boxed{M_u = 66.3}$ kip-ft/ft

Is M_u less than M_r? $\boxed{\text{check} = \text{"OK"}}$

Check the minimum reinforcement limits in accordance with **LRFD [5.7.3.3.2]**:

$f_r = 0.24\,\lambda\sqrt{f'_c}$ = modulus of rupture (ksi) **LRFD [5.4.2.6]**

$f_r = 0.24\sqrt{f'_c}$ λ = 1.0 (normal wgt. conc.) **LRFD [5.4.2.8]** $\boxed{f_r = 0.449}$ ksi

$I_g = \dfrac{1}{12}\, b\,(D\ 12)^3$ $\boxed{I_g = 27000}$ in^4

$y_t = \dfrac{1}{2}\, D\ 12$ $\boxed{y_t = 15.00}$ in

$S_c = \dfrac{I_g}{y_t}$ $\boxed{S_c = 1800}$ in^3

$M_{cr} = \gamma_3(\gamma_1 f_r)\, S_c$ therefore, $M_{cr} = 1.1\, f_r\, S_c$

Where:

$\gamma_1 = 1.6$ flexural cracking variability factor

$\gamma_3 = 0.67$ ratio of specified minimum yield strength to ultimate tensile strength of the reinforcement <u>for A615, Grade 60 reinforcement</u>

$M_{cr} = 1.1\ f_r\ S_c\ \frac{1}{12}$ $\boxed{M_{cr} = 74.1}$ kip-ft/ft

$\boxed{1.33\ M_u = 88.2}$ kip-ft/ft

Is M_r greater than the lesser value of M_{cr} and $1.33*M_u$? $\boxed{check = \text{"OK"}}$

E14-4.7.1.4 Evaluate Bottom Transverse Reinforcement Strength

Bottom transverse reinforcement strength is determined by using the maximum pile reaction.

Determine the moment arms

$arm_v1 = A - y_{p1}$ $\boxed{arm_v1 = 3.5}$ ft

$arm_v2 = A - y_{p2}$ $\boxed{arm_v2 = 0.8}$ ft

Determine the moment for **Strength Ia**:

$V_{u_1a} = P_{U1a}\ NP_1$ $\boxed{V_{u_1a} = 9.8}$ kip/ft

$V_{u_2a} = P_{U2a}\ NP_2$ $\boxed{V_{u_2a} = 9.5}$ kip/ft

$M_{u_Ia} = V_{u_1a}\ arm_v1 + V_{u_2a}\ arm_v2$ $\boxed{M_{u_Ia} = 41.6}$ kip-ft/ft

Determine the moment for **Strength Ib**:

$V_{u_1b} = P_{U1b}\ NP_1$ $\boxed{V_{u_1b} = 6.8}$ kip/ft

$V_{u_2b} = P_{U2b}\ NP_2$ $\boxed{V_{u_2b} = 12.5}$ kip/ft

$M_{u_Ib} = V_{u_1b}\ arm_v1 + V_{u_2b}\ arm_v2$ $\boxed{M_{u_Ib} = 33.3}$ kip-ft/ft

Determine the design moment:

$M_u = \max(M_{u_Ia}, M_{u_Ib})$ $\boxed{M_u = 41.6}$ kip-ft/ft

Calculated the capacity of the toe in flexure at the face of the stem:

$M_n = A_{s_toe}\ f_y \left(d_{s_toe} - \frac{a_toe}{2}\right) \frac{1}{12}$ $\boxed{M_n = 91.6}$ kip-ft/ft

Calculate the flexural resistance factor ϕ_F:

$\beta_1 = 0.85$

$c = \frac{a_toe}{\beta_1}$ $\boxed{c = 1.58}$ in

$$\phi_F = \begin{cases} 0.75 & \text{if } \dfrac{d_{s_toe}}{c} < \dfrac{5}{3} \\ 0.65 + 0.15\left(\dfrac{d_{s_toe}}{c} - 1\right) & \text{if } \dfrac{5}{3} \le \dfrac{d_{s_toe}}{c} \le \dfrac{8}{3} \\ 0.90 & \text{otherwise} \end{cases}$$

$\phi_F = 0.90$

based on f_y = 60 ksi, **LRFD [5.5.4.2.1], [Table C5.7.2.1-1]**

Calculate the flexural factored resistance, M_r:

$M_r = \phi_F M_n$ $M_r = 82.4$ kip-ft/ft

$M_u = 41.6$ kip-ft/ft

Is M_u less than M_r? check = "OK"

Check the minimum reinforcement limits in accordance with **LRFD [5.7.3.3.2]**:

$f_r = 0.24\,\lambda\sqrt{f'_c}$ = modulus of rupture (ksi) **LRFD [5.4.2.6]**

$f_r = 0.24\sqrt{f'_c}$ λ = 1.0 (normal wgt. conc.) **LRFD [5.4.2.8]** $f_r = 0.449$ ksi

$I_g = \dfrac{1}{12}\, b\,(D\ 12)^3$ $I_g = 27000$ in^4

$y_t = \dfrac{1}{2}\, D\ 12$ $y_t = 15.00$ in

$S_c = \dfrac{I_g}{y_t}$ $S_c = 1800$ in^3

$M_{cr} = 1.1\, f_r\, S_c\, \dfrac{1}{12}$ from E14-4.7.1.3 $M_{cr} = 74.1$ kip-ft/ft

$1.33\, M_u = 55.3$ kip-ft/ft

Is M_r greater than the lesser value of M_{cr} and $1.33{*}M_u$? check = "OK"

E14-4.7.1.5 Evaluate Longitudinal Reinforcement Strength

The structural design of the longitudinal reinforcement, assuming the footing acts as a continuous beam over pile supports, is calculated using the maximum pile reactions.

Compute the effective shear depth, d_v ,for the longitudinal reinforcement

$cover = 6.0$ in

$s = 12.0$ in (bar spacing)

$Bar_{No} = 5$ (longitudinal bar size)

$Bar_D = 0.625$ in (longitudinal bar diameter)

$Bar_A = 0.310$ in^2 (longitudinal bar area)

$$A_{s_long} = \frac{Bar_A}{\frac{s}{12}}$$ $A_{s_long} = 0.31$ in^2/ft

$$d_s = D\ 12 - cover - Bar_{D_toe} - \frac{Bar_D}{2}$$ $d_s = 22.8$ in

$$a_long = \frac{A_{s_long}\ f_y}{\alpha_1\ f'_c\ b}$$ $a_long = 0.5$ in

$$d_{v1} = d_s - \frac{a_long}{2}$$ $d_{v1} = 22.6$ in

$$d_{v2} = 0.9\ d_s$$ $d_{v2} = 20.5$ in

$$d_{v3} = 0.72\ D\ 12$$ $d_{v3} = 21.6$ in

$$d_{v_long} = \max(d_{v1}, d_{v2}, d_{v3})$$ $d_{v_long} = 22.6$ in

Calculate the design moment using a uniform vertical load:

$$L_{pile} = \max(P_1, P_2, P_3)$$ $L_{pile} = 8.0$ ft

$$w_u = \frac{V_lb}{B}$$ $w_u = 3.2$ kip/ft/ft

$$M_u = \frac{w_u\ L_{pile}^2}{10}$$ $M_u = 20.3$ kip-ft/ft

Calculated the capacity of the toe in flexure at the face of the stem:

$$M_n = A_{s_long}\, f_y \left(d_s - \frac{a_long}{2}\right) \frac{1}{12}$$ $M_n = 35.0$ kip-ft/ft

Calculate the flexural resistance factor ϕ_F:

$$\beta_1 = 0.85$$

$$c = \frac{a_toe}{\beta_1}$$ $c = 1.58$ in

$$\phi_F = \begin{cases} 0.75 & \text{if } \frac{d_s}{c} < \frac{5}{3} \\ 0.65 + 0.15\left(\frac{d_s}{c} - 1\right) & \text{if } \frac{5}{3} \le \frac{d_s}{c} \le \frac{8}{3} \\ 0.90 & \text{otherwise} \end{cases}$$

$\phi_F = 0.90$

based on f_y = 60 ksi, **LRFD [5.5.4.2.1], [Table C5.7.2.1-1]**

Calculate the flexural factored resistance, M_r:

$$M_r = \phi_F\, M_n$$ $M_r = 31.5$ kip-ft/ft

Is M_u less than M_r? check = "OK"

Check the minimum reinforcement limits in accordance with **LRFD [5.7.3.3.2]**:

$f_r = 0.24\, \lambda \sqrt{f'_c}$ = modulus of rupture (ksi) **LRFD [5.4.2.6]**

$f_r = 0.24 \sqrt{f'_c}$ λ = 1.0 (normal wgt. conc.) **LRFD [5.4.2.8]** $f_r = 0.449$ ksi

$$I_g = \frac{1}{12}\, b\, (D\ 12)^3$$ $I_g = 27000$ in^4

$$y_t = \frac{1}{2}\, D\ 12$$ $y_t = 15.00$ in

$$S_c = \frac{I_g}{y_t}$$ $S_c = 1800$ in^3

$$M_{cr} = 1.1\, f_r\, S_c\, \frac{1}{12}$$ from E14-4.7.1.3 $M_{cr} = 74.1$ kip-ft/ft

$1.33\, M_u = 27.1$ kip-ft/ft

Is M_r greater than the lesser value of M_{cr} and 1.33*M_u? check = "OK"

E14-4.7.2 Evaluate Stem Strength

Unfactored Stem Horizontal Loads and Moments:

$H_1 = \gamma_f\, h_{eq}\, h'\, k_a \cos(90\ \text{deg} - \theta + \delta)$ $\boxed{H_1 = 0.6}$ kip/ft

$H_2 = \frac{1}{2}\, \gamma_f\, h'^2\, k_a \cos(90\ \text{deg} - \theta + \delta)$ $\boxed{H_2 = 7.7}$ kip/ft

$M_1 = H_1 \left(\frac{h'}{2}\right)$ $\boxed{M_1 = 6.4}$ kip-ft/ft

$M_2 = H_2 \left(\frac{h'}{3}\right)$ $\boxed{M_2 = 55.2}$ kip-ft/ft

Factored Stem Horizontal Loads and Moments:

for **Strength Ib**:

$H_{u1} = 1.75\, H_1 + 1.50\, H_2$ $\boxed{H_{u1} = 12.6}$ kip/ft

$M_{u1} = 1.75\, M_1 + 1.50\, M_2$ $\boxed{M_{u1} = 94.0}$ kip-ft/ft

for **Service I**:

$H_{u3} = 1.00\, H_1 + 1.00\, H_2$ $\boxed{H_{u3} = 8.3}$ kip/ft

$M_{u3} = 1.00\, M_1 + 1.00\, M_2$ $\boxed{M_{u3} = 61.6}$ kip-ft/ft

E14-4.7.2.1 Evaluate Stem Shear Strength at Footing

$V_u = H_{u1}$ $\boxed{V_u = 12.6}$ kip/ft

Nominal shear resistance, V_n, is taken as the lesser of V_{n1} and V_{n2} **LRFD [5.8.3.3]**

$V_{n1} = V_c$ **LRFD [Eq 5.8.3.3-1]**

where: $V_c = 0.0316\, \beta \lambda \sqrt{f'_c}\, b_v\, d_v$

$V_{n2} = 0.25\, f'_c\, b_v\, d_v$ **LRFD [Eq 5.8.3.3-2]**

Compute the shear resistance due to concrete, V_c:

cover = 2.0 in

s = 12.0 in (bar spacing)

$Bar_{No} = 9$ (transverse bar size)

$Bar_D = 1.13$ in (transverse bar diameter)

$Bar_A = 1.00$ in^2 (transverse bar area)

$$A_s = \frac{Bar_A}{\frac{s}{12}}$$ $A_s = 1.00$ in^2/ft

$$d_s = T_b\ 12 - cover - \frac{Bar_D}{2}$$ $d_s = 25.6$ in

$$a = \frac{A_s\ f_y}{\alpha_1\ f'_c\ b}$$ $a = 1.7$ in

$$d_{v1} = d_s - \frac{a}{2}$$ $d_{v1} = 24.7$ in

$$d_{v2} = 0.9\ d_s$$ $d_{v2} = 23.0$ in

$$d_{v3} = 0.72\ T_b\ 12$$ $d_{v3} = 20.3$ in

$$d_v = \max(d_{v1}, d_{v2}, d_{v3})$$ $d_v = 24.7$ in

Nominal shear resistance, V_n, is taken as the lesser of V_{n1} and V_{n2}

$\beta = 2.0$ λ = 1.0 (normal wgt. conc.) **LRFD [5.4.2.8]**

$$V_c = 0.0316\ \beta\ \lambda\sqrt{f'_c}\ b\ d_v$$ $V_c = 35.1$ kip/ft

$$V_{n1} = V_c$$ $V_{n1} = 35.1$ kip/ft

$$V_{n2} = 0.25\ f'_c\ b\ d_v$$ $V_{n2} = 259.6$ kip/ft

$$V_n = \min(V_{n1}, V_{n2})$$ $V_n = 35.1$ kip/ft

$$V_r = \phi_v\ V_n$$ $V_r = 31.6$ kip/ft

$V_u = 12.6$ kip/ft

Is V_u less than V_r? check = "OK"

E14-4.7.2.2 Evaluate Stem Flexural Strength at Footing

$$M_u = M_{u1}$$ $M_u = 94.0$ kip-ft/ft

Calculate the capacity of the stem in flexure at the face of the footing:

$$M_n = A_s\ f_y \left(d_s - \frac{a}{2}\right) \frac{1}{12}$$ $M_n = 123.6$ kip-ft/ft

Calculate the flexural resistance factor ϕ_F:

$\beta_1 = 0.85$

$c = \frac{a}{\beta_1}$ $\boxed{c = 1.98}$ in

$$\phi_F = \begin{cases} 0.75 & \text{if } \frac{d_s}{c} < \frac{5}{3} \\ 0.65 + 0.15\left(\frac{d_s}{c} - 1\right) & \text{if } \frac{5}{3} \le \frac{d_s}{c} \le \frac{8}{3} \\ 0.90 & \text{otherwise} \end{cases}$$

$\boxed{\phi_F = 0.90}$

based on f_y = 60 ksi,
LRFD [5.5.4.2.1], [Table C5.7.2.1-1]

Calculate the flexural factored resistance, M_r:

$M_r = \phi_F M_n$ $\boxed{M_r = 111.2}$ kip-ft/ft

$\boxed{M_u = 94.0}$ kip-ft/ft

Is M_u less than M_r? $\boxed{\text{check} = \text{"OK"}}$

Check the minimum reinforcement limits in accordance with **LRFD [5.7.3.3.2]**:

$f_r = 0.24\,\lambda\sqrt{f'_c}$ = modulus of rupture (ksi) **LRFD [5.4.2.6]**

$f_r = 0.24\sqrt{f'_c}$ λ = 1.0 (normal wgt. conc.) **LRFD [5.4.2.8]** $\boxed{f_r = 0.45}$ ksi

$I_g = \frac{1}{12}\, b\,(T_b\ 12)^3$ $\boxed{I_g = 22247}$ in^4

$y_t = \frac{1}{2}\, T_b\ 12$ $\boxed{y_t = 14.1}$ in

$S_c = \frac{I_g}{y_t}$ $\boxed{S_c = 1582}$ in^3

$M_{cr_s} = 1.1\, f_r\, S_c\, \frac{1}{12}$ from E14-4.7.1.3 $\boxed{M_{cr_s} = 65.1}$ kip-ft/ft

$\boxed{1.33\ M_u = 125.0}$ kip-ft/ft

Is M_r greater than the lesser value of M_{cr} and 1.33*M_u? $\boxed{\text{check} = \text{"OK"}}$

Check the Service Ib crack control requirements in accordance with **LRFD [5.7.3.4]**

$$\rho = \frac{A_s}{d_s\ b}$$ $\rho = 0.00326$

$$n = \frac{E_s}{E_c}$$ $n = 8.09$

$$k = \sqrt{(\rho\ n)^2 + 2\ \rho\ n} - \rho\ n$$ $k = 0.205$

$$j = 1 - \frac{k}{3}$$ $j = 0.932$

$$d_c = \text{cover} + \frac{Bar_D}{2}$$ $d_c = 2.6$ in

$$f_{ss} = \frac{M_{u3}}{A_s\ j\ d_s}\ 12 \le 0.6\ f_y$$ $f_{ss} = 31.0$ ksi $\le 0.6\ f_y$ O.K.

$$h = T_b\ 12$$

$$\beta_s = 1 + \frac{d_c}{0.7\left(h - d_c\right)}$$ $\beta_s = 1.1$

$\gamma_e = 1.00$ for Class 1 exposure

$$s_{max} = \frac{700\ \gamma_e}{\beta_s\ f_{ss}} - 2\ d_c$$ $s_{max} = 14.6$ in

$s = 12.0$ in

Is the bar spacing less than s_{max}? check = "OK"

E14-4.7.2.3 Transfer of Force at Base of Stem

Specification requires that the transfer of lateral forces from the stem to the footing be in accordance with the shear-transfer provisions of **LRFD [5.8.4]**. That calculation will not be presented. Refer to E13-1.9.3 for a similar computation.

E14-4.7.3 Temperature and Shrinkage Steel

Evaluate temperature and shrinkage requirements

E14-4.7.3.1 Temperature and Shrinkage Steel for Footing

The footing will not be exposed to daily temperature changes. Thus temperature and shrinkage steel is not required.

E14-4.7.3.2 Temperature and Shrinkage Steel of Stem

The stem will be exposed to daily temperature changes. In accordance with AASTHO **LRFD [5.10.8]** the stem shall provide temperature and shrinkage steel on each face and in each direction as calculated below:

$s = 18.0$ in (bar spacing)

$Bar_{No} = 4$ (bar size)

$Bar_A = 0.20$ in^2 (temperature and shrinkage bar area)

$$A_s = \frac{Bar_A}{\frac{s}{12}}$$ (temperature and shrinkage provided)

$A_s = 0.13$ in^2/ft

$b_s = (H - D)\ 12$ least width of stem $b_s = 258.0$ in

$h_s = T_t\ 12$ least thickness of stem $h_s = 12.0$ in

$$A_{ts} = \frac{1.3\ b_s\ h_s}{2\left(b_s + h_s\right) f_y}$$ Area of reinforcement per foot, on each face and in each direction $A_{ts} = 0.12$ in^2/ft

Is $0.11 \le A_s \le 0.60$? check = "OK"

Is $A_s > A_{ts}$? check = "OK"

Check the maximum spacing requirements

$s_1 = \min\left(3\ h_s, 18\right)$ $s_1 = 18.0$ in

$$s_2 = \begin{cases} 12 & \text{if } h_s > 18 \\ s_1 & \text{otherwise} \end{cases}$$ For walls and footings (in) $s_2 = 18.0$ in

$s_{max} = \min\left(s_1, s_2\right)$ $s_{max} = 18.0$ in

Is the bar spacing less than s_{max}? check = "OK"

E14-4.8 Summary of Results

List summary of results.

E14-4.8.1 Summary of External Stability

Based on the defined project parameters the following external stability checks have been satisfied:

External Check	CDR
	Strength I
Bearing	1.46
Eccentricity	> 10
Sliding	1.12

Table E14-4.8-1
Summary of External Stability Computations

E14-4.8.2 Summary of Wall Strength Design

The required wall reinforcing from the previous computations are presented in Figure E14-6.9-1.

E14-4.8.3 Drainage Design

Drainage requirements shall be investigated and detailed accordingly. In this example drainage requirements are met by providing granular, free draining backfill material with a pipe underdrain located at the bottom of the wall (Assumed wall is adjacent to sidewalk) as shown in Figure E14-4.9-1.

E14-4.9 Final Cast-In-Place Concrete Wall Schematic

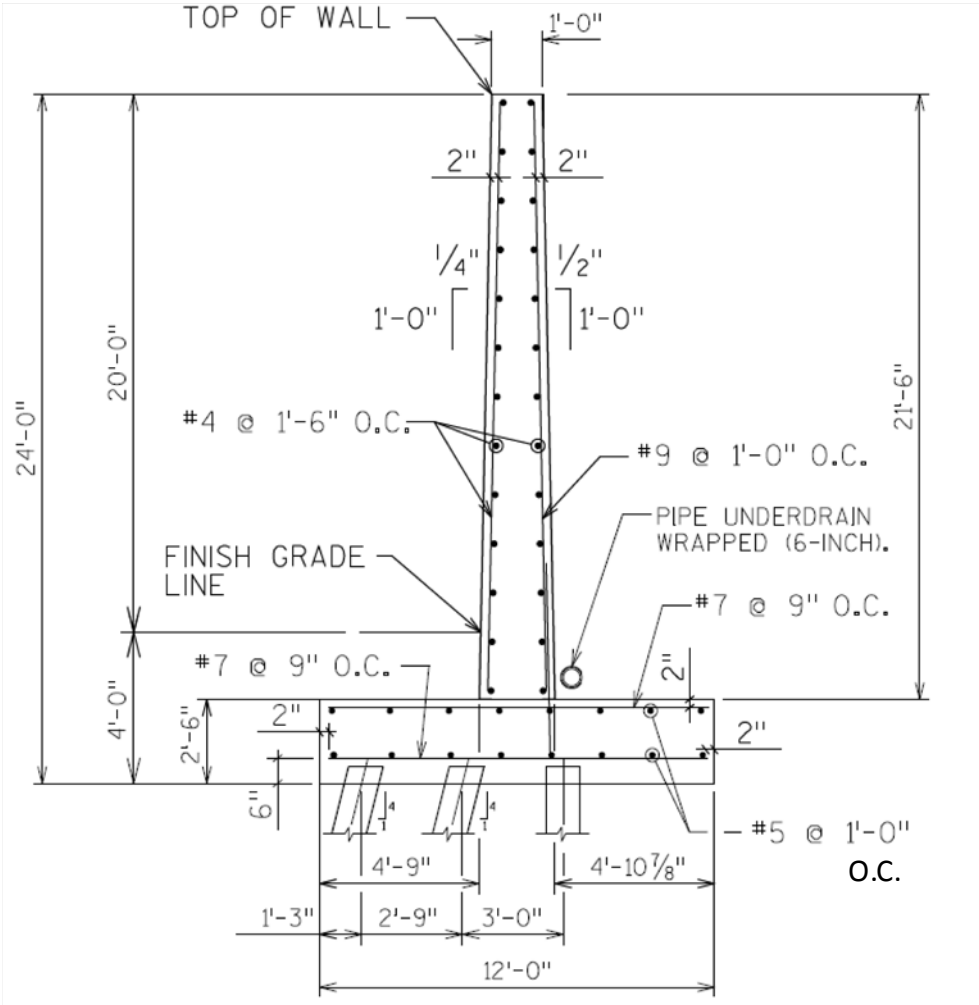

Figure E14-4.9-1
Cast-In-Place Wall Schematic

This page intentionally left blank.

Table of Contents

E14-5 Sheet Pile Wall, LRFD 2
E14-5.1 Establish Project Requirements 2
E14-5.2 Design Parameters 3
E14-5.3 Establish Earth Pressure Diagram 4
E14-5.4 Permanent and Transient Loads 5
E14-5.4.1 Compute Active Earth Pressure 5
E14-5.4.2 Compute Passive Earth Pressure 5
E14-5.4.3 Compute Factored Loads 5
E14-3.5 Compute Wall Embedment Depth and Factored Bending Moment 6
E14-5.6 Compute the Required Flexural Resistance 8
E14-5.7 Final Sheet Pile Wall Schematic 9

E14-5 Sheet Pile Wall, LRFD

General

This example shows design calculations for permanent sheet pile walls conforming to the LRFD Bridge Design Specifications and the WisDOT Bridge Manual. *(Example is current through LRFD Fifth Edition - 2010)*

Sample design calculations for required embedment depth and determining preliminary design sections will be presented. The overall stability and settlement calculations will not be shown in this example, but are required.

Design steps presented in 14.10.5 are used for the wall design.

E14-5.1 Establish Project Requirements

The following example is for a permanent cantilever sheet pile wall penetrating sand and having the low water level at the dredge line as shown in Figure E14-5.1-1. External stability and structural components are the designer's (WisDOT/consultant) responsibility.

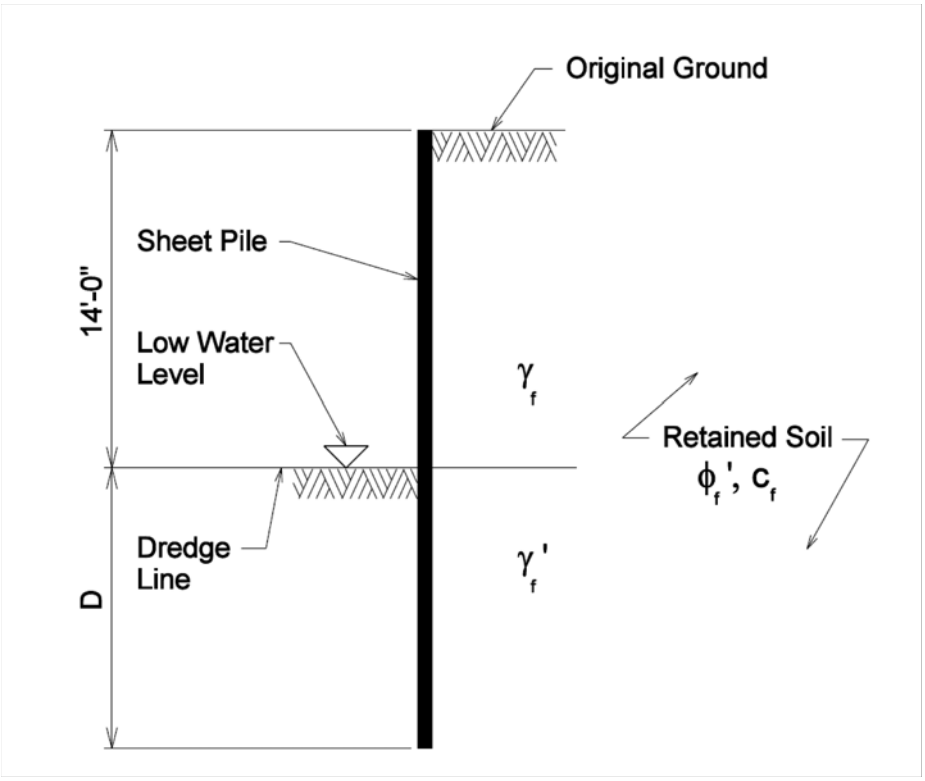

Figure E14-5.1-1
Cantilever Sheet Pile Wall with Horizontal Backslope

Wall Geometry

$H = 14$ Design wall height, ft

$\theta = 90$ deg Angle of back face of wall to horizontal

$\beta = 0$ deg Inclination of ground slope behind face of wall (horizontal)

E14-5.2 Design Parameters

Project Parameters

Design_Life = 75 Wall design life (min), years **LRFD [11.5.1]**

Soil Properties (From Geotechnical Site Investigation Report)

Designer to determine if long-term or short-term soil strength parameters govern external stability.

Soil Design Parameters

$\phi_f = 35$ deg Angle of internal friction

$\gamma = 0.115$ Unit weight of soil, kcf

$\gamma_w = 0.0624$ Unit weight of water, kcf

$\gamma' = \gamma - \gamma_w$ Effective unit weight of soil, kcf

$\boxed{\gamma' = 0.053}$

$c = 0$ psf Cohesion, psf

Live Load Surcharge Parameters

$SUR = 0.100$ Live load surcharge for walls without traffic, ksf (14.4.5.4.2)

E14-5.3 Establish Earth Pressure Diagram

In accordance with **LRFD [3.11.5.6]** "simplified" and "conventional" methods may be used for lateral earth pressure distributions. This example will use the "simplified" method as shown in **LRFD [Figure 3.11.5.3-2]**. The "conventional" method would result in a more exact solution and is based on Figure E14-5.3-1(b) lateral load distributions.

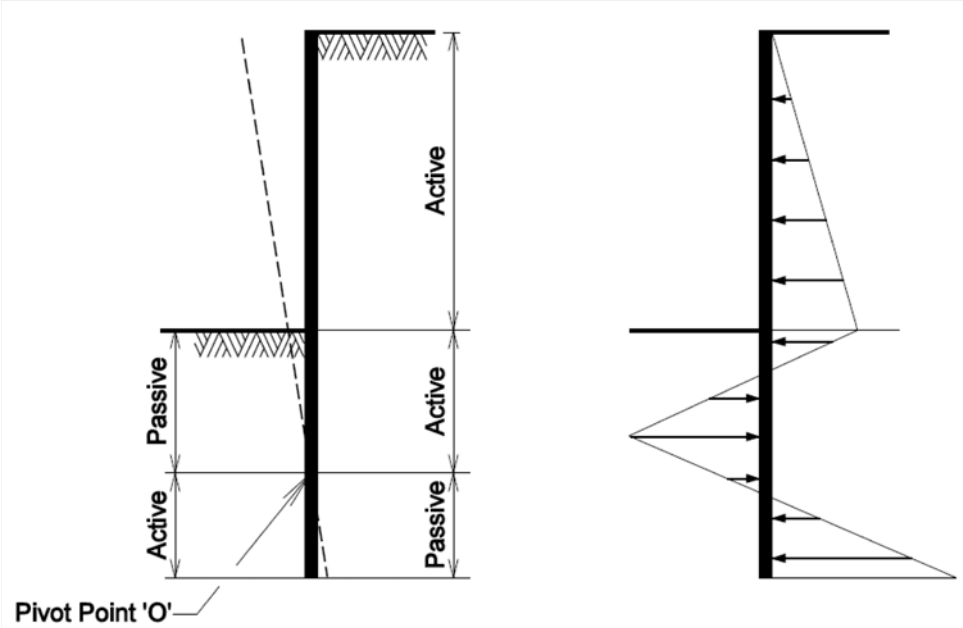

(a) (b)

Figure E14-5.3-1
Cantilever Sheet Pile Wall Penetrating a Sand Layer: (a) Wall Yielding Pattern and Earth Pressure Zones; (b) Conventional Net Earth Pressure Distribution (After Das, 2007).

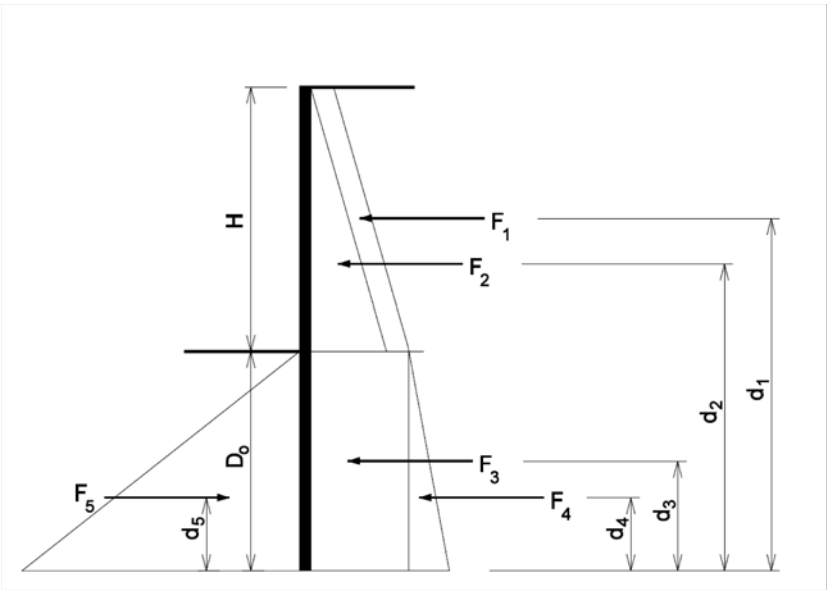

Figure E14-5.3-2
Cantilever Sheet Pile Wall Free-Body Diagram - Simplified Method

E14-5.4 Permanent and Transient Loads

In this example, horizontal earth pressures 'EH' will be used as shown in Figure E14-5.3-1(b). For simplicity, no transient, vertical or surcharge loads are present in this example.

E14-5.4.1 Compute Active Earth Pressure

Compute the coefficient of active earth pressure using Rankine Theory

$$\phi_f = 35 \text{ deg}$$

$$k_a = \tan\left(45 \text{ deg} - \frac{\phi_f}{2}\right)^2 \qquad \boxed{k_a = 0.271}$$

E14-5.4.2 Compute Passive Earth Pressure

Compute the coefficient of passive earth pressure using Rankine Theory

$$\phi_f = 35 \text{ deg}$$

$$k_p = \tan\left(45 \text{ deg} + \frac{\phi_f}{2}\right)^2 \qquad \boxed{k_p = 3.690}$$

E14-5.4.3 Compute Factored Loads

The active earth pressure is factored by its appropriate LRFD load type 'EH' **LRFD [Tables 3.4.1-1 and 3.4.1-2]**. Where as the passive earth pressure is factored by its appropriate resistance factor **LRFD [Table 11.5.7-1]**.

Compute the factored active earth pressure coefficient, K_a

$k_a = 0.271$	Unfactored active earth pressure coefficient	
$\gamma_{EH} = 1.50$	Horizontal earth pressure load factor (maximum)	
$K_a = \gamma_{EH}\, k_a$	Factored active earth pressure coefficient	$K_a = 0.406$

Compute the factored passive earth pressure coefficient, K_p

$k_p = 3.69$	Unfactored passive earth pressure coefficient	
$\phi_p = 0.75$	Nongravity cantilevered wall resistance factored for flexural capacity of a vertical element **LRFD [Table 11.5.7-1]**	
$K_p = \phi_p\, k_p$	Factored passive earth pressure coefficient	$K_p = 2.768$

E14-3.5 Compute Wall Embedment Depth and Factored Bending Moment

Compute the required embedment depth, D_o, corresponding to the depth where the factored active and passive moments are in equilibrium from Figure E14-5.3-2. Trial-and-error is used to determine the depth by adjusting D_o in the following equations:

$D_o = 27.5$ ft

Force (factored)

$F_1 = -(K_a\ SUR)\ H$ $\boxed{F_1 = -0.57}$ kip/ft

$F_2 = \frac{-1}{2}(\gamma\ K_a\ H)\ H$ $\boxed{F_2 = -4.58}$ kip/ft

$F_3 = -(\gamma\ K_a\ H + K_a\ SUR)\ D_o$ $\boxed{F_3 = -19.11}$ kip/ft

$F_4 = \frac{-1}{2}(\gamma'\ K_a\ D_o)\ D_o$ $\boxed{F_4 = -8.08}$ kip/ft

$F_5 = \frac{1}{2}(\gamma'\ K_p\ D_o)\ D_o$ $\boxed{F_5 = 55.05}$ kip/ft

Moment Arm			Moment (factored)		
$d_1 = \frac{H}{2} + D_o$	$\boxed{d_1 = 34.5}$	ft	$M_1 = F_1\ d_1$	$\boxed{M_1 = -19.6}$	kip-ft/ft
$d_2 = \frac{H}{3} + D_o$	$\boxed{d_2 = 32.2}$	ft	$M_2 = F_2\ d_2$	$\boxed{M_2 = -147.4}$	kip-ft/ft
$d_3 = \frac{D_o}{2}$	$\boxed{d_3 = 13.8}$	ft	$M_3 = F_3\ d_3$	$\boxed{M_3 = -262.8}$	kip-ft/ft
$d_4 = \frac{D_o}{3}$	$\boxed{d_4 = 9.2}$	ft	$M_4 = F_4\ d_4$	$\boxed{M_4 = -74.1}$	kip-ft/ft
$d_5 = \frac{D_o}{3}$	$\boxed{d_5 = 9.2}$	ft	$M_5 = F_5\ d_5$	$\boxed{M_5 = 504.6}$	kip-ft/ft

$\Sigma M = M_1 + M_2 + M_3 + M_4 + M_5$ (Approximately equal to zero) $\boxed{\Sigma M = 0.66}$ kip-ft/ft

Capacity:Demand Ratio (CDR) at D_o

$M_a = M_1 + M_2 + M_3 + M_4$ Factored active moments $\boxed{M_a = -503.9}$ kip-ft/ft

$M_p = M_5$ Factored passive moments $\boxed{M_p = 504.6}$ kip-ft/ft

$CDR = \left|\frac{M_p}{M_a}\right|$ $\boxed{CDR = 1.00}$

Is the $CDR \geq 1.0$? $\boxed{\text{check} = \text{"OK"}}$

Compute the required embedment depth, D. Since the wall embedment depth uses the Simplified Method with continuous vertical elements a 20% increase in embedment will be included as shown in **LRFD [Figure 3.11.5.6-3]**.

$D = 1.2\ D_o$ $\boxed{D = 33.00}$ ft

Compute the location of the maximum bending moment, M_{max}, corresponding to the depth where the factored active and passive lateral forces are in equilibrium from Figure E14-5.3-2. Trial-and-error is used to determine the depth by adjusting D_o in the following equations:

$D_o = 16.3$ ft

Force (factored)

$F_1 = -(K_a\ SUR)\ H$ $\boxed{F_1 = -0.57}$ kip/ft

$F_2 = \frac{-1}{2}(\gamma\ K_a\ H)\ H$ $\boxed{F_2 = -4.58}$ kip/ft

$F_3 = -(\gamma\ K_a\ H + K_a\ SUR)\ D_o$ $\boxed{F_3 = -11.33}$ kip/ft

$F_4 = \frac{-1}{2}(\gamma'\ K_a\ D_o)\ D_o$ $\boxed{F_4 = -2.84}$ kip/ft

$F_5 = \frac{1}{2}(\gamma'\ K_p\ D_o)\ D_o$ $\boxed{F_5 = 19.34}$ kip/ft

$\Sigma F = F_1 + F_2 + F_3 + F_4 + F_5$ (Approximately equal to zero) $\boxed{\Sigma F = 0.02}$ kip-ft/ft

Moment Arm			Moment (factored)		
$d_1 = \frac{H}{2} + D_o$	$\boxed{d_1 = 23.3}$	ft	$M_1 = F_1\ d_1$	$\boxed{M_1 = -13.3}$	kip-ft/ft
$d_2 = \frac{H}{3} + D_o$	$\boxed{d_2 = 21.0}$	ft	$M_2 = F_2\ d_2$	$\boxed{M_2 = -96.1}$	kip-ft/ft
$d_3 = \frac{D_o}{2}$	$\boxed{d_3 = 8.2}$	ft	$M_3 = F_3\ d_3$	$\boxed{M_3 = -92.3}$	kip-ft/ft
$d_4 = \frac{D_o}{3}$	$\boxed{d_4 = 5.4}$	ft	$M_4 = F_4\ d_4$	$\boxed{M_4 = -15.4}$	kip-ft/ft
$d_5 = \frac{D_o}{3}$	$\boxed{d_5 = 5.4}$	ft	$M_5 = F_5\ d_5$	$\boxed{M_5 = 105.1}$	kip-ft/ft

$\Sigma M = M_1 + M_2 + M_3 + M_4 + M_5$ $\boxed{\Sigma M = -112.0}$ kip-ft/ft

$M_{max} = |\Sigma M|$ $\boxed{M_{max} = 112.0}$ kip-ft/ft

Figure E14-5.5-1 tabulates the above computations in a spreadsheet for varying embedment depths.

D_o	F_1	F_2	F_3	F_4	F_5	d_1	d_2	d_3	d_4	d_5	Fa	Fp	Fa+Fp	M_1	M_2	M_3	M_4	M_5	M_a	M_p	CDR	M_a+M_p
0	-0.6	-4.6	0.0	0.0	0.0	7.0	4.7	0.0	0.0	0.0	-5.2	0.0	-5.2	-4	-21	0	0	0	-25	0	0.0	-25.4
2	-0.6	-4.6	-1.4	0.0	0.3	9.0	6.7	1.0	0.7	0.7	-6.6	0.3	-6.3	-5	-31	-1	0	0	-37	0	0.0	-36.9
4	-0.6	-4.6	-2.8	-0.2	1.2	11.0	8.7	2.0	1.3	1.3	-8.1	1.2	-6.9	-6	-40	-6	0	2	-52	2	0.0	-50.2
6	-0.6	-4.6	-4.2	-0.4	2.6	13.0	10.7	3.0	2.0	2.0	-9.7	2.6	-7.1	-7	-49	-13	-1	5	-70	5	0.1	-64.3
8	-0.6	-4.6	-5.6	-0.7	4.7	15.0	12.7	4.0	2.7	2.7	-11.4	4.7	-6.7	-9	-58	-22	-2	12	-91	12	0.1	-78.2
10	-0.6	-4.6	-7.0	-1.1	7.3	17.0	14.7	5.0	3.3	3.3	-13.2	7.3	-5.9	-10	-67	-35	-4	24	-115	24	0.2	-90.9
12	-0.6	-4.6	-8.3	-1.5	10.5	19.0	16.7	6.0	4.0	4.0	-15.0	10.5	-4.5	-11	-76	-50	-6	42	-143	42	0.3	-101.4
14	-0.6	-4.6	-9.7	-2.1	14.3	21.0	18.7	7.0	4.7	4.7	-17.0	14.3	-2.7	-12	-86	-68	-10	67	-175	67	0.4	-108.8
16.3	**-0.6**	**-4.6**	**-11.3**	**-2.8**	**19.3**	**23.3**	**21.0**	**8.2**	**5.4**	**5.4**	**-19.3**	**19.3**	**0.0**	**-13**	**-96**	**-92**	**-15**	**105**	**-217**	**105**	**0.5**	**-112.0**
18	-0.6	-4.6	-12.5	-3.5	23.6	25.0	22.7	9.0	6.0	6.0	-21.1	23.6	2.5	-14	-104	-113	-21	142	-251	142	0.6	-110.0
20	-0.6	-4.6	-13.9	-4.3	29.1	27.0	24.7	10.0	6.7	6.7	-23.3	29.1	5.8	-15	-113	-139	-29	194	-296	194	0.7	-101.8
22	-0.6	-4.6	-15.3	-5.2	35.2	29.0	26.7	11.0	7.3	7.3	-25.6	35.2	9.6	-17	-122	-168	-38	258	-345	258	0.7	-86.5
24	-0.6	-4.6	-16.7	-6.2	41.9	31.0	28.7	12.0	8.0	8.0	-28.0	41.9	13.9	-18	-131	-200	-49	335	-398	335	0.8	-63.0
26	-0.6	-4.6	-18.1	-7.2	49.2	33.0	30.7	13.0	8.7	8.7	-30.4	49.2	18.8	-19	-140	-235	-63	426	-457	426	0.9	-30.4
27.5	**-0.6**	**-4.6**	**-19.1**	**-8.1**	**54.9**	**34.5**	**32.1**	**13.7**	**9.2**	**9.2**	**-32.3**	**54.9**	**22.6**	**-20**	**-147**	**-262**	**-74**	**503**	**-503**	**503**	**1.0**	**0.0**
30	-0.6	-4.6	-20.9	-9.6	65.5	37.0	34.7	15.0	10.0	10.0	-35.6	65.5	29.9	-21	-159	-313	-96	655	-589	655	1.1	66.2
32	-0.6	-4.6	-22.2	-10.9	74.5	39.0	36.7	16.0	10.7	10.7	-38.3	74.5	36.2	-22	-168	-356	-117	795	-663	795	1.2	132.2

Results Tabulated Above Values

Required Embedment Depth, D_o (M_p/M_a>1)=	**27.47**	ft
Actual Embedment (1.2*D_o) =	**32.96**	ft
Maximum Factored Moment Location (F_a+F_p=0) =	**16.30**	ft
Maximum Factored Design Moment=	**112.0**	kip-ft/ft

Figure E14-5.5-1
Design Analysis for Cantilever Sheet Pile Wall

E14-5.6 Compute the Required Flexural Resistance

The following is a design check for flexural resistance:

$$M_{max} \leq \phi_f\ M_n \qquad \phi_f M_n = \phi_f F_y Z$$

$M_{max} = 112.0$ kip-ft/ft

$\phi_f = 0.90$ Resistance factor for flexure (based on nongravity cantilevered walls for the flexural capacity of vertical elements **LRFD [Table 11.5.7-1]**)

M_n Nominal flexural resistance of the section

$F_y = 50$ Steel yield stress, ksi (assumed A572 Grade 50)

Z Plastic section modulus (in^3/ft)

$$Z_{reqd} = \frac{M_{max}\ 12}{\phi_f\ F_y} \qquad \boxed{Z_{reqd} = 29.87}\ \text{in}^3/\text{ft}$$

Based on this minimum section modulus a preliminary sheet pile section PZ-27 (Z=36.49 in^3/ft) is selected. Additional design checks shall be made based on project requirements.

E14-5.7 Final Sheet Pile Wall Schematic

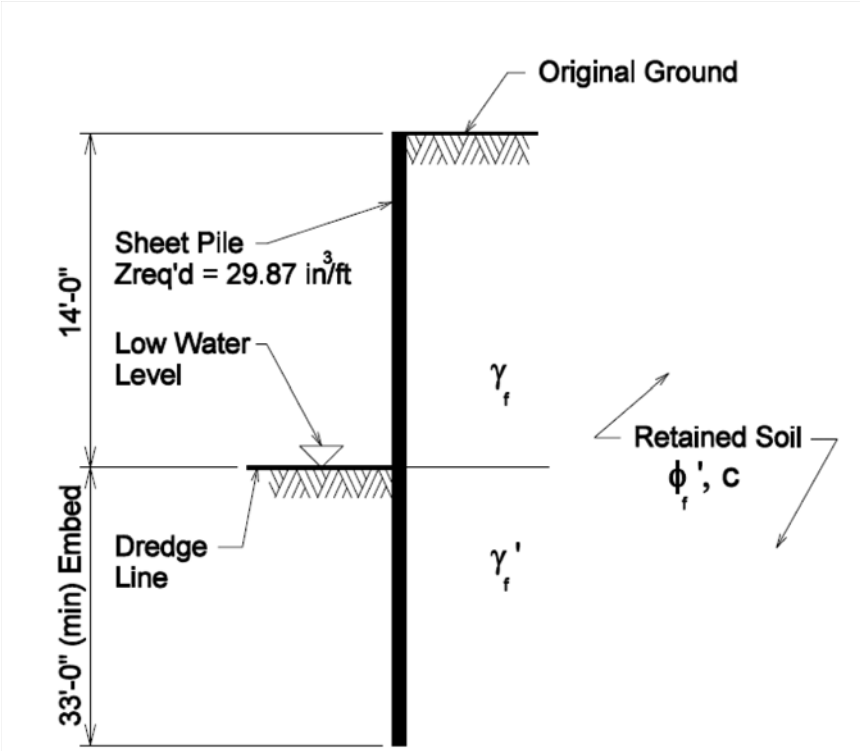

Figure E14-5.7-1
Cantilever Sheet Pile Wall Schematic

This page intentionally left blank.