Table of Contents

18.1 Introduction 3
18.1.1 General 3
18.1.2 Limitations 3
18.2 Specifications, Material Properties and Structure Type 4
18.2.1 Specifications 4
18.2.2 Material Properties 4
18.2.3 Structure Type and Slab Depth 4
18.3 Limit States Design Method 8
18.3.1 Design and Rating Requirements 8
18.3.2 LRFD Requirements 8
18.3.2.1 General 8
18.3.2.2 Statewide Policy 8
18.3.3 Strength Limit State 9
18.3.3.1 Factored Loads 9
18.3.3.2 Factored Resistance 10
18.3.3.2.1 Moment Capacity 10
18.3.3.2.2 Shear Capacity 12
18.3.3.2.3 Uplift Check 12
18.3.3.2.4 Tensile Capacity – Longitudinal Reinforcement 12
18.3.4 Service Limit State 13
18.3.4.1 Factored Loads 13
18.3.4.2 Factored Resistance 13
18.3.4.2.1 Crack Control Criteria 13
18.3.4.2.2 Live Load Deflection Criteria 14
18.3.4.2.3 Dead Load Deflection (Camber) Criteria 14
18.3.5 Fatigue Limit State 15
18.3.5.1 Factored Loads (Stress Range) 15
18.3.5.2 Factored Resistance 15
18.3.5.2.1 Fatigue Stress Range 16
18.4 Concrete Slab Design Procedure 17
18.4.1 Trial Slab Depth 17
18.4.2 Dead Loads (DC, DW) 17

18.4.3 Live Loads 18
18.4.3.1 Vehicular Live Load (LL) and Dynamic Load Allowance (IM) 18
18.4.3.2 Pedestrian Live Load (PL) 19
18.4.4 Minimum Slab Thickness Criteria 19
18.4.4.1 Live Load Deflection Criteria 19
18.4.4.2 Dead Load Deflection (Camber) Criteria 19
18.4.5 Live Load Distribution 20
18.4.5.1 Interior Strip 20
18.4.5.1.1 Strength and Service Limit State 21
18.4.5.1.2 Fatigue Limit State 21
18.4.5.2 Exterior Strip 22
18.4.5.2.1 Strength and Service Limit State 22
18.4.6 Longitudinal Slab Reinforcement 23
18.4.6.1 Design for Strength 23
18.4.6.2 Check for Fatigue 24
18.4.6.3 Check for Crack Control 25
18.4.6.4 Minimum Reinforcement Check 26
18.4.6.5 Bar Cutoffs 27
18.4.6.5.1 Positive Moment Reinforcement 27
18.4.6.5.2 Negative Moment Reinforcement 27
18.4.7 Transverse Slab Reinforcement 27
18.4.7.1 Distribution Reinforcement 27
18.4.7.2 Reinforcement in Slab over Piers 28
18.4.8 Shrinkage and Temperature Reinforcement 28
18.4.9 Shear Check of Slab 28
18.4.10 Longitudinal Reinforcement Tension Check 29
18.4.11 Uplift Check 29
18.4.12 Deflection Joints and Construction Joints 29
18.4.13 Reinforcement Tables 30
18.5 Design Example 32

18.1 Introduction

18.1.1 General

This chapter considers the following types of concrete structures:

- Flat Slab
- Haunched Slab

A longitudinal slab is one of the least complex types of bridge superstructures. It is composed of a single element superstructure in comparison to the two elements of the transverse slab on girders or the three elements of a longitudinal slab on floor beams supported by girders. Due to simplicity of design and construction, the concrete slab structure is relatively economical. Its limitation lies in the practical range of span lengths and maximum skews for its application. For longer span applications, the dead load becomes too high for continued economy. Application of the haunched slab has increased the practical range of span lengths for concrete slab structures.

18.1.2 Limitations

Concrete slab structure types are not recommended over streams where the normal water freeboard is less than 4 feet; formwork removal requires this clearance. When spans exceed 35 feet, freeboard shall be increased to 5 feet above normal water.

All concrete slab structures are limited to a maximum skew of 30 degrees. Slab structures with skews in excess of 30 degrees, require analysis of complex boundary conditions that exceed the capabilities of the present design approach used in the Bureau of Structures.

Continuous span slabs are to be designed using the following pier types:

- Piers with pier caps (on columns or shafts)
- Wall type piers

These types will allow for ease of future superstructure replacement. Piers that have columns without pier caps, have had the columns damaged during superstructure removal. This type of pier will not be allowed without the approval of the Structures Design Section.

WisDOT policy item:

Slab bridges should not be used on the Interstate.

18.2 Specifications, Material Properties and Structure Type

18.2.1 Specifications

Reference may be made to the design and construction related material as presented in the following specifications:

- *State of Wisconsin, Department of Transportation Standard Specifications for Highway and Structure Construction*

  Section 502 - Concrete Bridges

  Section 505 - Steel Reinforcement

- Other Specifications as referenced in Chapter 3

18.2.2 Material Properties

The properties of materials used for concrete slab structures are as follows:

f'_c = specified compressive strength of concrete at 28 days, based on cylinder tests

4 ksi, for concrete slab superstructure

3.5 ksi, for concrete substructure units

f_y = 60 ksi, specified minimum yield strength of reinforcement (Grade 60)

E_s = 29,000 ksi, modulus of elasticity of steel reinforcement **LRFD [5.4.3.2]**

E_c = modulus of elasticity of concrete in slab **LRFD [C5.4.2.4]**

= $33{,}000\ K_1\ w_c^{1.5}\ (f'_c)^{1/2} = 3800$ ksi

Where:

K_1 = 1.0

w_c = 0.150 kcf, unit weight of concrete

n = $E_s / E_c = 8$ **LRFD [5.7.1]** (modular ratio)

18.2.3 Structure Type and Slab Depth

Prepare preliminary structure data, looking at the type of structure, span lengths, approximate slab depth, skew, roadway width, etc.. The selection of the type of concrete slab

structure (haunched / flat) is a function of the span lengths selected. Recommended span length ranges and corresponding structure type are shown for single-span and multiple-span slabs in Figure 18.2-1. Estimated slab depths are shown in Table 18.2-1.

Currently, voided slab structures are not allowed. Some of the existing voided slabs have displayed excessive longitudinal cracking over the voids in the negative zone. This may have been caused by the voids deforming or floating-up due to lateral pressure during the concrete pour. Recent research indicates slabs with steel void-formers have large crack widths above the voids due to higher stress concentrations.

If optimum span ratios are selected such that the positive moments in each span are equal, the interior and end span slab depths will be equal, provided Strength Limit State controls. Optimum span ratios are independent of applied live loading.

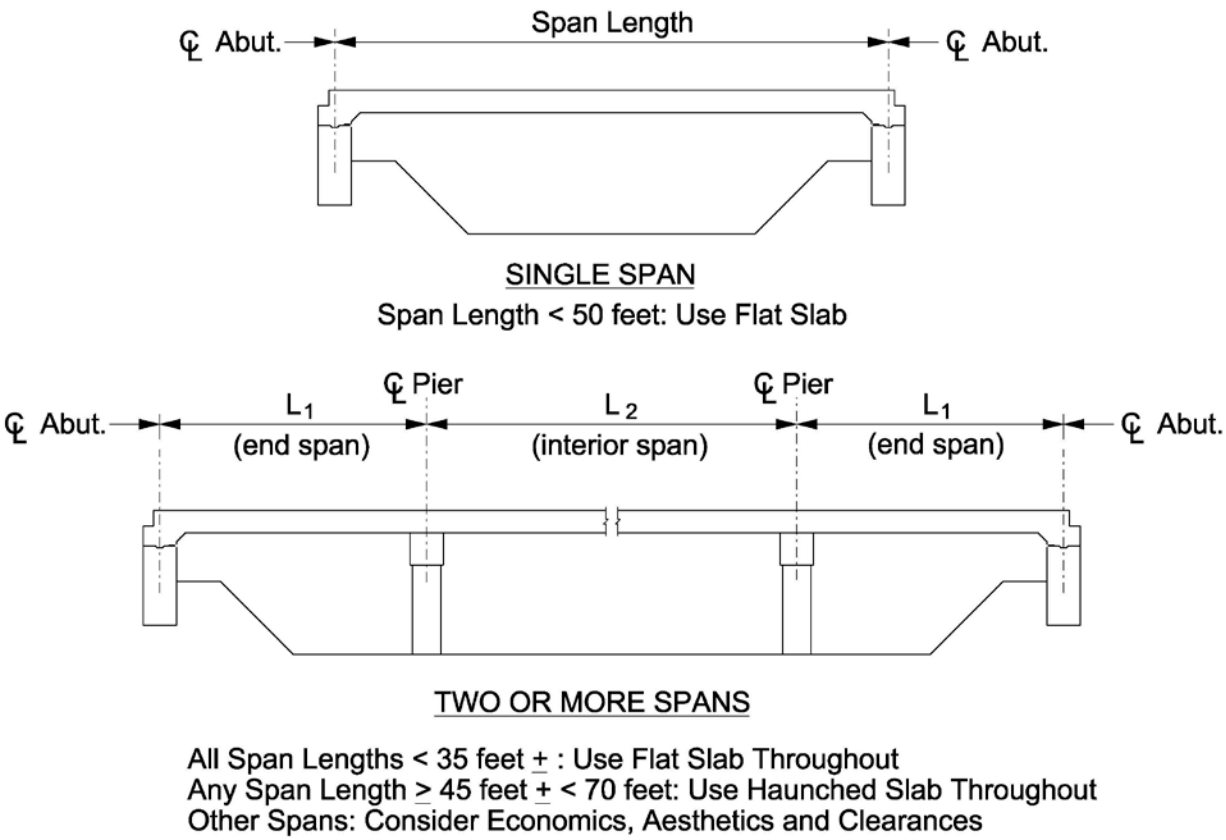

Figure 18.2-1
Span Length vs. Slab Type

For the following optimum span ratio equations based on Strength Limit State controlling, L_1 equals the end span lengths and L_2 equals the interior span length or lengths, for structures with three or more spans.

For flat slabs the optimum span ratio is obtained when $L_2 = 1.25L_1$. The optimum span ratio for a three-span haunched slab results when $L_2 = L_1(1.43 - 0.002L_1)$ and for a four-span haunched slab when $L_2 = 1.39L_1$.

Approximate slab depths for multiple-span flat and haunched slabs can be obtained from Table 18.2-1. These values are to be used for dead load computations and preliminary computations only and the final slab depth is to be determined by the designer.

(s) Span Length (feet)	Slab Depth (inches)	
	Haunched [1]	Flat [4]
20	---	12
25	---	14
30	---	16
35	---	18
40	---	20
45	16 [2]	22
50	17.5 [2]	24
55	19 [2]	26
60	20 [2]	---
65	22 [3]	---
70	25 [3]	---

Table 18.2-1
Span Length vs. Slab Depth

[1] These estimated slab depths at mid-span, apply to interior spans of three or more span structures, with an end span length of approximately 0.7 times the interior span. Depths are based on dead load deflection (camber) and live load deflection limits. Haunch length (L_{haunch}) = 0.167 (L_2), and d_{slab} / D_{haunch} = 0.6 were used. L_2 = interior span length, (d_{slab}) = slab depth in span and (D_{haunch}) = slab depth at haunch. Values in table include ½ inch wearing surface.

[2] Depths controlled by live load deflection criteria

[3] Depths controlled by dead load deflection (camber) criteria

[4] These values represent **LRFD [2.5.2.6.3]** recommended minimum depths for continuous-spans using (s+10)/30. The slab span length (s) in the equation and resulting minimum depths are in feet and are presented in inches in Table 18.2-1. For simple-spans, the Bureau of Structures adds 10% greater depth and checks the criteria in 18.4.4. Values in table include ½ inch wearing surface.

The minimum slab depth is 12 inches. Use increments of ½ inch to select depths > 12 inches.

18.3 Limit States Design Method

18.3.1 Design and Rating Requirements

All new concrete slab structures are to meet design requirements as stated in 17.1.1 and rating requirements as stated in 17.1.2.

18.3.2 LRFD Requirements

18.3.2.1 General

For concrete slab design, the slab dimensions and the size and spacing of reinforcement shall be selected to satisfy the equation below for all appropriate Limit States: **LRFD [1.3.2.1, 5.5.1]**

$$Q = \sum \eta_i \gamma_i Q_i \leq \phi R_n = R_r$$ (Limit States Equation) **LRFD [1.3.2.1, 3.4.1]**

Where:

η_i	=	load modifier (a function of η_D , η_R and η_I) **LRFD [1.3.2.1, 1.3.3, 1.3.4, 1.3.5]**
γ_i	=	load factor
Q_i	=	force effect; moment, shear, stress range or deformation caused by applied loads
Q	=	total factored force effect
ϕ	=	resistance factor
R_n	=	nominal resistance; resistance of a component to force effects
R_r	=	factored resistance = ϕR_n

The Limit States used for concrete slab design are:

- Strength I Limit State
- Service I Limit State
- Fatigue I Limit State

18.3.2.2 Statewide Policy

Current Bureau of Structures policy is :

- Set value of load modifier, η_i , and its factors (η_D , η_R , η_I) all equal to 1.00 for concrete slab design.

- Ignore any influence of ADTT on multiple presence factor, m, in **LRFD [Table 3.6.1.1.2-1]** that would reduce force effects, Q_i , for slab bridges.

- Ignore reduction factor, r, for skewed slab bridges in **LRFD [4.6.2.3]** that would reduce longitudinal force effects, Q_i .

18.3.3 Strength Limit State

Strength I Limit State shall be applied to ensure that strength and stability are provided to resist the significant load combinations that a bridge is expected to experience during its design life **LRFD [1.3.2.4]**. The total factored force effect, Q, must not exceed the factored resistance, R_r , as shown in the equation in 18.3.2.1.

Strength I Limit State **LRFD [3.4.1]** will be used for:

- Designing longitudinal slab reinforcement for flexure

- Designing transverse slab reinforcement over the piers for flexure

- Checking shear (two-way) in slab at the piers

- Checking uplift at the abutments

- Checking longitudinal slab reinforcement for tension from shear

18.3.3.1 Factored Loads

The value of the load modifier, η_i , is 1.00, as stated in 18.3.2.2.

Strength I Limit State will be used to design the structure for force effects, Q_i , due to applied dead loads, DC and DW (including future wearing surface), defined in 18.4.2 and appropriate (HL-93) live loads, LL and IM, defined in 18.4.3.1. When sidewalks are present, include force effects of pedestrian live load, PL, defined in 18.4.3.2.

The load factor, γ_i , is used to adjust force effects on a structural element. This factor accounts for variability of loads, lack of accuracy in analysis, and the probability of simultaneous occurrence of different loads.

For Strength I Limit State, the values of γ_i for each applied load, are found in **LRFD [Tables 3.4.1-1 and 3.4.1-2]** and their values are: γ_{DC} = 1.25/0.90, γ_{DW} = 1.50/0.65, γ_{LL+IM} = γ_{PL} = 1.75. The values for γ_{DC} and γ_{DW} have a maximum and minimum value.

Therefore, for Strength I Limit State:

$$Q = 1.0\ [\ 1.25(DC) + 1.50(DW) + 1.75((LL + IM) + PL)\ ]$$

Where DC, DW, LL, IM, and PL represent force effects due to these applied loads. The load factors shown for DC and DW are maximum values. Use maximum or minimum values as shown in **LRFD [Table 3.4.1-2]** to calculate the critical force effect.

18.3.3.2 Factored Resistance

The resistance factor, ϕ, is used to reduce the computed nominal resistance of a structural element. This factor accounts for variability of material properties, structural dimensions and workmanship, and uncertainty in prediction of resistance.

The resistance factors, ϕ, for Strength Limit State **LRFD [5.5.4.2]** are:

- ϕ = 0.90 for flexure & tension (for tension-controlled reinforced concrete sections as defined in **LRFD [5.7.2.1]**)
- ϕ = 0.90 for shear and torsion

The factored resistance, R_r (M_r , V_r , T_{cap}), associated with the list of items to be designed/checked using Strength I Limit State in 18.3.3, are described in the following sections.

18.3.3.2.1 Moment Capacity

Stress is assumed proportional to strain below the proportional limit on the stress-strain diagram. Tests have shown that at high levels of stress in concrete, stress is not proportional to strain. Recognizing this fact, strength analysis takes into account the nonlinearity of the stress-strain diagram. This is accomplished by using a rectangular stress block to relate the concrete compressive stress distribution to the concrete strain. The compressive stress block has a uniform value of $\alpha_1 \cdot f'_C$ over a zone bounded by the edges of the cross section and a straight line located parallel to the neutral axis at the distance a = $\beta_1 \cdot$(c) from the extreme compression fiber. The distance (c) is measured perpendicular to the neutral axis. The factor α_1 shall be taken as 0.85 for concrete strengths not exceeding 10.0 ksi and the factor β_1 shall be taken as 0.85 for concrete strengths not exceeding 4.0 ksi **LRFD [5.7.2.2]**. Strength predictions using this method are in agreement with strength test results. The representation of these assumptions is shown in Figure 18.3-1.

The moment capacity (factored resistance) of concrete components shall be based on the conditions of equilibrium and strain compatibility, resistance factors as specified in **LRFD [5.5.4.2]** and the assumptions outlined in **LRFD [5.7.2]**.

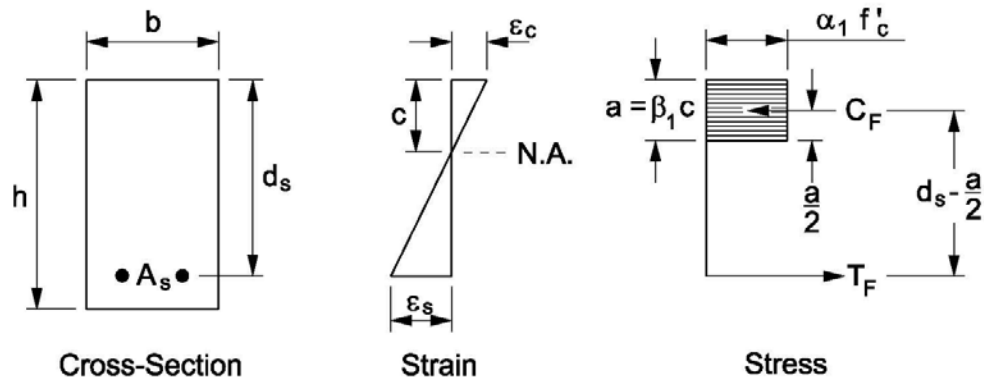

Figure 18.3-1
Stress / Strain on Cross - Section

Referring to Figure 18.3-1, the internal force equations are:

$C_F = \alpha_1 \cdot (f'_c)\ (b)\ (a) = 0.85\ (f'_c)\ (b)\ (a)$

$T_F = (A_s)\ (f_s)$

By equating C_F to T_F, and solving for the compressive stress block depth, (a), gives:

$a = A_s\ f_s / 0.85\ (f'_c)\ (b)$

Use ($f_s = f_y$) when the steel yields prior to crushing of the concrete. To check for yielding, assume ($f_s = f_y$) and calculate the value for (a). Then calculate the value for $c = a / \beta_1$ and d_s as shown in Figure 18.3-1. If c / d_s does not exceed the value calculated below, then the reinforcement has yielded and the assumption is correct, as stated in **LRFD [5.7.2.1]**.

$c / d_s \leq 0.003 / (0.003 + \varepsilon_{cl})$

ε_{cl} = compression controlled strain limit

for f_y = 60 ksi, ε_{cl} is 0.0020 per **LRFD[Table C5.7.2.1-1]**

if $c / d_s \leq 0.6$, then the reinforcement (f_y = 60 ksi) will yield and ($f_s = f_y$)

For rectangular sections, the nominal moment resistance, M_n , (tension reinforcement only) equals: **LRFD [5.7.3.2.3]**

$M_n = A_s\ f_s\ (d_s - a/2)$

The factored resistance, M_r , or moment capacity, shall be taken as: **LRFD [5.7.3.2.1]**

$M_r = \phi\ M_n = \phi\ A_s\ f_s\ (d_s - a/2)$

For tension-controlled reinforced concrete sections, the resistance factor, ϕ, is 0.90, therefore:

$$M_r = (0.9)\ A_s\ f_s\ (d_s - a/2)$$

18.3.3.2.2 Shear Capacity

The nominal shear resistance, V_n , for two-way action, shall be determined as: **LRFD [5.8.1.4, 5.13.3.6.3]**

$$V_n = (0.063 + 0.126 / \beta_c)\ (f'_c)^{½}\ b_o\ d_v \leq 0.126\ (f'_c)^{½}\ b_o\ d_v \quad \text{(kips)}$$

Where:

f'_c	=	4.0 ksi (for concrete slab bridges)
β_c	=	ratio of long side to short side of the rectangle through which the concentrated load or reaction force is transmitted
d_v	=	effective shear depth as determined in **LRFD [5.8.2.9]** (in)
b_o	=	perimeter of the critical section (in)

The factored resistance, V_r , or shear capacity, shall be taken as: **LRFD [5.8.2.1]**

$$V_r = \phi\ V_n$$

The resistance factor, ϕ, is 0.90, therefore:

$$V_r = (0.9)\ V_n$$

18.3.3.2.3 Uplift Check

The check of uplift at abutments does not use a factored resistance, but compares factored dead load and live load reactions.

18.3.3.2.4 Tensile Capacity – Longitudinal Reinforcement

The nominal tensile resistance, T_{nom} , for an area, A_s , of developed reinforcement, equals:

$$T_{nom} = A_s\ f_y$$

The factored resistance, T_{cap} , or tensile capacity, shall be taken as:

$$T_{cap} = \phi\ T_{nom} = \phi\ A_s\ f_y$$

For tension-controlled reinforced concrete sections, the resistance factor, ϕ, is 0.90, therefore:

$T_{cap} = (0.9)\ A_s\ f_y$

18.3.4 Service Limit State

Service I Limit State shall be applied as restrictions on stress, deformation, and crack width under regular service conditions **LRFD [1.3.2.2]**. The total factored force effect, Q, must not exceed the factored resistance, R_r , as shown in the equation in 18.3.2.1.

Service I Limit State **LRFD [3.4.1]** will be used for:

- Checking longitudinal slab reinforcement for crack control criteria
- Checking transverse slab reinforcement over the piers for crack control criteria
- Checking live load deflection criteria
- Checking dead load deflection (camber) criteria

18.3.4.1 Factored Loads

The value of the load modifier, η_i , is 1.00, as stated in 18.3.2.2.

Service I Limit State will be used to analyze the structure for force effects, Q_i , due to applied dead loads, DC and DW (including future wearing surface), defined in 18.4.2 and/or appropriate (HL-93) live loads, LL and IM, defined in 18.4.3.1. When sidewalks are present, include force effects of pedestrian live load, PL, where applicable, defined in 18.4.3.2.

For Service I Limit State, the values of γ_i for each applied load, are found in **LRFD [Table 3.4.1-1]** and their values are: $\gamma_{DC} = \gamma_{DW} = \gamma_{LL+IM} = \gamma_{PL} = 1.0$

Therefore, for Service I Limit State:

$$Q = 1.0\ [\ 1.0(DC) + 1.0(DW) + 1.0((LL + IM) + PL)\ ]$$

Where DC, DW, LL, IM, and PL represent force effects due to these applied loads.

18.3.4.2 Factored Resistance

The resistance factor, ϕ, for Service Limit State, is found in **LRFD [1.3.2.1]** and its value is 1.00.

The factored resistance, R_r , associated with the list of items to be checked using Service I Limit State in 18.3.4, are described in the following sections.

18.3.4.2.1 Crack Control Criteria

All reinforced concrete members are subject to cracking under any load condition, which produces tension in the gross section in excess of the cracking strength of the concrete.

Provisions are provided for the distribution of tension reinforcement to control flexural cracking.

Crack control criteria does not use a factored resistance, but calculates a maximum spacing for flexure reinforcement based on service load stress in bars, concrete cover and exposure condition.

18.3.4.2.2 Live Load Deflection Criteria

All concrete slab structures shall be designed to meet live load deflection limits. The Bureau of Structures limits live load deflections for concrete slab structures to L/1200. The deflections are based on entire slab width acting as a unit and gross moment of inertia, I_g .

The nominal resistance, R_n , or deflection limit, is:

$$R_n = L/1200$$

Where:

L = span length

The factored resistance, R_r , is:

$$R_r = \phi R_n = \phi (L/1200)$$

The resistance factor, ϕ, is 1.00, therefore:

$$R_r = (1.0) R_n = (L/1200)$$

18.3.4.2.3 Dead Load Deflection (Camber) Criteria

All concrete slab structures shall be designed to meet dead load deflection (camber) limits. Dead load deflections for concrete slab structures are computed using the gross moment of inertia, I_g . Bureau of Structures calculates full camber based on multiplying the dead load deflection values by a factor of three. A maximum allowable camber has been set for simple-span slabs and continuous-span slabs as shown in 18.4.4.2.

The nominal resistance, R_n , or deflection limit, is:

$$R_n = (\text{maximum allowable camber}) / 3$$

The factored resistance, R_r , is:

$$R_r = \phi R_n = \phi (\text{maximum allowable camber}) / 3$$

The resistance factor, ϕ, is 1.00, therefore:

$$R_r = (1.0) R_n = (\text{maximum allowable camber}) / 3$$

18.3.5 Fatigue Limit State

Fatigue I Limit State shall be applied as a restriction on stress range as a result of a single design truck occurring at the number of expected stress range cycles **LRFD [1.3.2.3]**. The Fatigue I Limit State is intended to limit crack growth under repetitive loads to prevent fracture of the reinforcement during the design life of the bridge. The factored force effect (stress range), Q, must not exceed the factored resistance, R_r , as shown in the equation in 18.3.2.1.

For fatigue considerations, concrete members shall satisfy: **LRFD [5.5.3.1]**

$$\eta_i \gamma_i (\Delta f) \leq (\Delta F)_{TH}$$

Where:

γ_i	=	Load factor for Fatigue I Limit State
Δf	=	Force effect, live load stress range due to the passage of the fatigue truck (ksi)
$(\Delta F)_{TH}$	=	Constant-amplitude fatigue threshold (ksi)

Fatigue I Limit State **LRFD [3.4.1]** will be used for:

- Checking longitudinal slab reinforcement for fatigue stress range criteria

18.3.5.1 Factored Loads (Stress Range)

The value of the load modifier, η_i , is 1.00, as stated in 18.3.2.2.

Fatigue I Limit State will be used to analyze the structure for force effects, $Q_i = (\Delta f)$, due to applied (Fatigue Truck) live load, LL and IM, defined in 18.4.3.1.

For Fatigue I Limit State, the value of γ_i for the applied live load, is found in **LRFD [Table 3.4.1-1]** and its value is $\gamma_{LL+IM} = 1.5$.

Therefore, for Fatigue I Limit State:

$$Q = 1.0 [1.5(LL + IM)]$$

Where LL and IM represent force effects, Δf, due to these applied loads.

18.3.5.2 Factored Resistance

The resistance factor, ϕ, for Fatigue Limit State, is found in **LRFD [C1.3.2.1]** and its value is 1.00 .

18.3.5.2.1 Fatigue Stress Range

The nominal resistance, $R_n = (\Delta F)_{TH}$, for fatigue stress range (for straight reinforcement), is: **LRFD [5.5.3.2]**

$$R_n = (\Delta F)_{TH} = 24 - 20\, f_{min} / f_y \quad \text{(ksi)}$$

Where:

f_{min} = the minimum stress resulting from the factored Fatigue Truck live load, combined with the stress from the dead loads on the structure; positive if tension, negative if compression (ksi)

f_y = minimum yield strength (ksi), not to be taken less than 60 ksi nor greater than 100 ksi

The factored resistance, R_r (for f_y = 60 ksi), is:

$$R_r = \phi\, R_n = \phi\, (24 - 0.33\, f_{min})$$

The resistance factor, ϕ, is 1.00, therefore:

$$R_r = (1.0)\, R_n = 24 - 0.33\, f_{min} \quad \text{(ksi)}$$

18.4 Concrete Slab Design Procedure

18.4.1 Trial Slab Depth

Prepare preliminary structure data, looking at the type of structure, span lengths, skew, roadway width, etc.. The selection of the type of concrete slab structure (haunched / flat) is a function of the span lengths selected. Recommended span length ranges and corresponding structure type are shown for single-span and multiple-span slabs in Figure 18.2-1. Optimum span ratios for multiple-span slabs are suggested in 18.2.3. Knowing the span lengths and the structure type, a trial slab depth can be obtained from Table 18.2-1.

For haunched slabs, the haunch depth, D_{haunch} , is proportional to the slab depth, d_{slab} , outside the haunch. A trial haunch depth can be selected as:

$$D_{haunch} = d_{slab} / 0.6$$

An economical haunch length, L_{haunch} , measured from C/L of pier to end of haunch, can be approximated between (0.15 L_2 to 0.18 L_2), where L_2 is the length of an interior span.

NOTE: With preliminary structure sizing complete, check to see if structure exceeds limitations in 18.1.2.

18.4.2 Dead Loads (DC, DW)

Dead loads (permanent loads) are defined in **LRFD [3.3.2]**. Concrete dead load is computed by using a unit weight of 150 pcf, with no adjustment in weight for the bar steel reinforcement.

DC = dead load of structural components and any nonstructural attachments

DW = dead load of future wearing surface (F.W.S.) and utilities

The slab dead load, DC_{slab} , and the section properties of the slab, do not include the ½ inch wearing surface. A post dead load, DW_{FWS} , of 20 psf, for possible future wearing surface (F.W.S.), is required in the design by the Bureau of Structures. The ½ inch wearing surface load, $DC_{1/2"WS}$, of 6 psf must also be included in the design of the slab.

Dead loads, DC, from parapets, medians and sidewalks are uniformly distributed across the full width of the slab when designing an interior strip. For the design of exterior strips (edge beams), any of these dead loads, DC, that are located directly over the exterior strip width and on the cantilevered portion of sidewalks, shall be applied to the exterior strip. For both interior and exterior strips, the future wearing surface, DW, located directly over the strip width shall be applied to it. See 17.2.7 for the distribution of dead loads.

18.4.3 Live Loads

18.4.3.1 Vehicular Live Load (LL) and Dynamic Load Allowance (IM)

The *AASHTO LRFD* Specifications contain several live load components (see 17.2.4.2) that are combined and scaled to create live load combinations that apply to different Limit States **LRFD [3.6.1]**.

The live load combinations used for design are:

LL#1:	Design Tandem (+ IM) + Design Lane Load	**LRFD [3.6.1.3.1]**
LL#2:	Design Truck (+ IM) + Design Lane Load	**LRFD [3.6.1.3.1]**
LL#3:	90% [Double Design Trucks (+ IM) + Design Lane Load]	**LRFD [3.6.1.3.1]**
LL#4:	Fatigue Truck (+ IM)	**LRFD [3.6.1.4.1]**
LL#5:	Design Truck (+ IM)	**LRFD [3.6.1.3.2]**
LL#6:	25% [Design Truck (+ IM)] + Design Lane Load	**LRFD [3.6.1.3.2]**

Table 18.4-1
Live Load Combinations

The dynamic load allowance, IM, **LRFD [3.6.2]** for the live load combinations above, is shown in Table 18.4-2.

Where (IM) is required, multiply the loads by (1 + IM/100) to include the dynamic effects of the load. (IM) is not applied to the Design Lane Load.

The live load combinations are applied to the Limit States as shown in Table 18.4-2.

The live load force effect, Q_i , shall be taken as the largest from the live loads shown in Table 18.4-2 for that Limit State.

Strength I Limit State: [1]	LL#1 , LL#2 , LL#3 [2]	IM = 33%
Service I Limit State: [1] (for crack control criteria)	LL#1 , LL#2 , LL#3 [2]	IM = 33%
Service I Limit State: (for LL deflection criteria)	LL#5 , LL#6	IM = 33%
Fatigue I Limit State: [3]	LL#4 (single Fatigue Truck)	IM = 15%

Table 18.4-2
Live Loads for Limit States

[1] Load combinations shown are used for design of interior strips and exterior strips without raised sidewalks, as shown in Figures 17.2-6 to 10. For an exterior strip with a raised sidewalk, use Design Lane Load portion of LL#2 for Live Load Case 1 and use Design Truck (+IM) portion of LL#2 for Live Load Case 2, as shown in Figure 17.2-11.

[2] (LL#3) is used to calculate negative live load moments between points of contraflexure and also reactions at interior supports. The points of contraflexure are located by placing a uniform load across the entire structure. For these moments and reactions, the results calculated from (LL#3) are compared with (LL#1) and (LL#2) results, and the critical value is selected.

[3] Used for design of interior strip only.

18.4.3.2 Pedestrian Live Load (PL)

For bridges designed for both vehicular and pedestrian live load, a pedestrian live load, PL, of 75 psf is used. However, for bridges designed exclusively for pedestrian and/or bicycle traffic, see *AASHTO LRFD Guide Specifications for the Design of Pedestrian Bridges* for live load. The dynamic load allowance, IM, is not applied to pedestrian live loads **LRFD [3.6.2]**.

Pedestrian loads are not applied to an interior strip for its design. For the design of exterior strips (edge beams), any pedestrian loads that are located directly over the exterior strip width and on the cantilevered portion of the sidewalk, shall be applied to the exterior strip. See 17.2.7 for the distribution of pedestrian live loads.

18.4.4 Minimum Slab Thickness Criteria

Check adequacy of chosen slab thickness by looking at live load deflection and dead load deflection (camber) criteria, using Service I Limit State.

18.4.4.1 Live Load Deflection Criteria

All concrete slab structures shall be designed to meet live load deflection limits **LRFD [2.5.2.6.2]**. Live load deflections for concrete slab structures are limited to L/1200, by the Bureau of Structures. The live load deflection, Δ_{LL+IM} , shall be calculated using factored loads described in 18.3.4.1 and 18.4.3.1 for Service I Limit State.

Place live loads in each design lane **LRFD [3.6.1.1.1]** and apply a multiple presence factor **LRFD [3.6.1.1.2]**. Use gross moment of inertia, I_g , based on entire slab width acting as a unit. Use modulus of elasticity E_c = 3800 ksi, see 18.2.2. The factored resistance, R_r , is described in 18.3.4.2.2.

Then check that, $\Delta_{LL+IM} \leq R_r$ is satisfied.

18.4.4.2 Dead Load Deflection (Camber) Criteria

All concrete slab structures shall be designed to meet dead load deflection (camber) limits **LRFD [5.7.3.6.2]**. Dead load deflections for concrete slab structures are computed using the gross moment of inertia, I_g . All dead loads are to be uniformly distributed across the width of the slab. These deflections are increased to provide for the time-dependent deformations of creep and shrinkage. Bureau of Structures currently calculates full camber as three times the dead load deflection. Most of the excess camber is dissipated during the first year of service, which is the time period that the majority of creep and shrinkage deflection occurs.

Noticeable excess deflection or structure sag can normally be attributed to falsework settlement. Use modulus of elasticity E_c = 3800 ksi, see 18.2.2 . The dead load deflection, Δ_{DL} , shall be calculated using factored loads described in 18.3.4.1 and 18.4.2. The factored resistance, R_r , is described in 18.3.4.2.3.

WisDOT exception to AASHTO:

Calculating full camber as three times the dead load deflection, as stated in paragraph above, is an exception to **LRFD [5.7.3.6.2]**. This exception, used by the Bureau of Structures, is based on field observations using this method.

Then check that, $\Delta_{DL} \leq R_r$ is satisfied.

A "Camber Diagram" is shown in the plans on the "Superstructure" sheet. Provide camber values, as well as centerline and edge of slab elevations, at 0.1 points of all spans.

Simple-Span Concrete Slabs:

Maximum allowable camber for simple-span slabs is limited to 2 ½ inches. For simple-span slabs, Bureau of Structures practice indicates that using a minimum slab depth (ft) from the equation 1.1(S + 10) / 30, (where S is span length in feet), and meeting the live load deflection and dead load deflection (camber) limits stated in this section, provides an adequate slab section for most cases.

WisDOT exception to AASHTO:

The equation for calculating minimum slab depth for simple-spans, as stated in paragraph above, is an exception to **LRFD [Table 2.5.2.6.3-1]**. This exception, used by the Bureau of Structures, is based on past performance using this equation.

Continuous-Span Concrete Slabs:

Maximum allowable camber for continuous-span slabs is 1 ¾ inches.

18.4.5 Live Load Distribution

Live loads are distributed over an equivalent width, E, as calculated below. The equivalent distribution width applies for both live load moment and shear.

18.4.5.1 Interior Strip

Equivalent interior strip widths for slab bridges are covered in **LRFD [4.6.2.1.2, 4.6.2.3]**.

The live loads to be placed on these widths are axle loads (i.e., two lines of wheels) and the full lane load.

Single-Lane Loading: $E = 10.0 + 5.0\,(L_1\,W_1)^{1/2}$

Multi-Lane Loading: $E = 84.0 + 1.44(L_1 W_1)^{1/2} \leq 12.0(W)/N_L$

Where:

E	=	equivalent distribution width (in)
L_1	=	modified span length taken equal to the lesser of the actual span or 60.0 ft (ft)
W_1	=	modified edge to edge width of bridge taken to be equal to the lesser of the actual width or 60.0 ft for multi-lane loading, or 30.0 ft for single-lane loading (ft)
W	=	physical edge to edge width of bridge (ft)
N_L	=	number of design lanes as specified in **LRFD [3.6.1.1.1]**

18.4.5.1.1 Strength and Service Limit State

Use the smaller equivalent width (single-lane or multi-lane), when (HL-93) live load is to be distributed, for Strength I Limit State and Service I Limit State.

The distribution factor, DF, is computed for a design slab width equal to one foot.

$$DF = \frac{1}{E}$$

Where:

E	=	equivalent distribution width (ft)

The multiple presence factor, m, has been included in the equations for distribution width, E, and therefore aren't used to adjust the distribution factor, DF, **LRFD [3.6.1.1.2]**.

Look at the distribution factor calculated for each span and select the largest value. This single value is to be applied along the entire length of the bridge.

18.4.5.1.2 Fatigue Limit State

Use equivalent widths from single-lane loading to check fatigue stress range criteria. For the Fatigue Limit State only one design truck (Fatigue Truck) is present **LRFD [3.6.1.4]**. Calculate the distribution factor, DF, and divide it by (1.20) to remove the effects of the multiple presence factor, m, which are present in the equation for equivalent width, E, **LRFD [3.6.1.1.2]**.

The distribution factor, DF, is computed for a design slab width equal to one foot.

$$DF = \frac{1}{E(1.20)}$$

Where:

E = equivalent distribution width (ft)

Look at the distribution factor calculated for each span and select the largest value. This single value is to be applied along the entire length of the bridge.

18.4.5.2 Exterior Strip

Equivalent exterior strip widths for slab bridges are covered in **LRFD [4.6.2.1.4]**.

For Exterior Strips without Raised Sidewalks:

The exterior strip width, E, is assumed to carry one wheel line and a tributary portion of design lane load (located directly over the strip width) as shown in Figures 17.2-7 and 17.2-9.

E equals the distance between the edge of the slab and the inside face of the barrier, plus 12 inches, plus ¼ of the full strip width specified in **LRFD [4.6.2.3]**.

The exterior strip width, E, shall not exceed either ½ the full strip width or 72 inches.

Use the smaller equivalent width (single-lane or multi-lane), for full strip width, when (HL-93) live load is to be distributed, for Strength I Limit State and Service I Limit State.

The multiple presence factor, m, has been included in the equations for full strip width and therefore aren't used to adjust the distribution factor **LRFD [3.6.1.1.2]**.

For Exterior Strips with Raised Sidewalks:

The exterior strip width, E, is to carry a tributary portion of design lane load (when its located directly over the strip width) as in Live Load Case 1 or one wheel line as in Live Load Case 2, as shown in Figure 17.2-11.

The exterior strip width, E, shall be 72 inches.

18.4.5.2.1 Strength and Service Limit State

The distribution factor, DF, is computed for a design slab width equal to one foot.

Compute the distribution factor associated with one truck wheel line, to be applied to axle loads:

$$DF = \frac{(1 \text{ wheel line})}{(2 \text{ wheel lines/lane})(E)}$$

Where:

E = equivalent distribution width (ft)

Look at the distribution factor (for axle loads) calculated for each span and select the largest value. This single value is to be applied along the entire length of the bridge.

Compute the distribution factor associated with tributary portion of design lane load, to be applied to full lane load: **LRFD [3.6.1.2.4]**

$$DF = \frac{\left[\dfrac{(SWL)}{(10\,\text{ft lane load width})}\right]}{(E)}$$

Where:

E = equivalent distribution width (ft)

SWL = Slab Width Loaded (with lane load) (ft) $\geq$ 0.

E – (distance from edge of slab to inside face of barrier) or

E – (distance from edge of slab to inside face of raised sidewalk)

Look at the distribution factor (for lane load) calculated for each span and select the largest value. This single value is to be applied along the entire length of the bridge.

18.4.6 Longitudinal Slab Reinforcement

The concrete cover on the top bars is 2 ½ inches, which includes a ½ inch wearing surface. The bottom bar cover is 1 ½ inches. Minimum clear spacing between adjacent longitudinal bars is 3 ½ inches. The maximum center to center spacing of adjacent bars shall not exceed 1.5 times the thickness of the slab or 18.0 inches **LRFD [5.10.3.2]**. When bundled bars are used, see **LRFD [5.10.3.1.5, 5.11.2.3, 5.11.5.2.1]**.

18.4.6.1 Design for Strength

Strength Limit State considerations and assumptions are detailed in **LRFD [5.5.4, 5.7.2]**.

The area of longitudinal slab reinforcement, A_s , should be designed for strength at maximum moment locations along the structure, and for haunched slab structures, checked for strength at the haunch/slab intercepts. The area should also be checked for strength at bar reinforcement cutoff locations. This reinforcement should be designed for interior and exterior strips (edge beams) in both positive and negative moment regions. The reinforcement in the exterior strip is always equal to or greater than that required for the slab in an interior strip. Compare the reinforcement to be used for each exterior strip and select the strip with the

largest amount of reinforcement (in^2/ft). Use this reinforcement pattern for both exterior strips to keep the bar layout symmetrical. Concrete parapets, curbs, sidewalks and other appurtenances are not to be considered to provide strength to the edge beam **LRFD [9.5.1]**. The total factored moment, M_u , shall be calculated using factored loads described in 18.3.3.1 for Strength I Limit State. Then calculate the coefficient of resistance, R_u :

$$R_u = M_u / \phi\, b\, d_s^2$$

Where:

ϕ	=	0.90 (see 18.3.3.2)
b	=	12 in (for a 1 foot design slab width)
d_s	=	slab depth (excl. ½ inch wearing surface) – bar clearance – ½ bar diameter (in)

Calculate the reinforcement ratio, ρ, using (R_u vs. ρ) Table 18.4-3 .

Then calculate required area,

$$A_s = \rho\, (b)\, (d_s)$$

Area of bar reinforcement per foot of slab width can be found in Table 18.4-4 .

The factored resistance, M_r , or moment capacity, shall be calculated as in 18.3.3.2.1.

Then check that, $M_u \leq M_r$ is satisfied.

The area of longitudinal reinforcement, A_s , should also be checked for moment capacity (factored resistance) along the structure, to make sure it can handle factored moments due to applied dead load (including future wearing surface) and the Wisconsin Standard Permit Vehicle (Wis-SPV) (with a minimum gross vehicle load of 190 kips) on an interior strip. This requirement is stated in 17.1.2.1. See Chapter 45 for details on checking the capacity of the structure for this Permit Vehicle.

18.4.6.2 Check for Fatigue

Fatigue Limit State considerations and assumptions are detailed in **LRFD [5.5.3, 5.7.1, 9.5.3]**

The area of longitudinal slab reinforcement, A_s , should be checked for fatigue stress range at locations where maximum stress range occurs along the structure, and for haunched slab structures, checked at the haunch/slab intercepts. The area should also be checked for fatigue stress range at bar reinforcement cutoff locations using Fatigue I Limit State. Check the reinforcement in an interior strip, where the largest number of fatigue cycles will occur.

Fatigue life of reinforcement is reduced by increasing the maximum stress level, bending of the bars and splicing of reinforcing bars by welding.

In regions where stress reversal takes place, continuous concrete slabs will be doubly reinforced. At these locations, the full stress range in the reinforcing bars from tension to compression is considered.

In regions of compressive stress due to permanent loads, fatigue shall be considered only if this compressive stress is less than 1.5 times the maximum tensile live load stress from the fatigue truck. The section properties for fatigue investigations shall be based on cracked sections where the sum of stresses, due to unfactored permanent loads, and 1.5 times the fatigue load is tensile and exceeds $0.095 (f'_c)^{½}$.

The factored stress range, Q, shall be calculated using factored loads described in 18.3.5.1. The factored resistance, R_r , shall be calculated as in 18.3.5.2.1.

Then check that, Q (factored stress range) $\leq R_r$ is satisfied.

Reference is made to the design example in 18.5 of this chapter for computations relating to reinforcement remaining in tension throughout the fatigue cycle, or going through tensile and compressive stresses during the fatigue cycle.

18.4.6.3 Check for Crack Control

Service Limit State considerations and assumptions are detailed in **LRFD [5.5.2, 5.7.1, 5.7.3.4]**.

The area of longitudinal slab reinforcement, A_s , should be checked for crack control at locations where maximum tensile stress occurs along the structure, and for haunched slab structures, checked at the haunch/slab intercepts. The area should also be checked for crack control at bar reinforcement cutoff locations using Service I Limit State. Check the reinforcement in an interior and exterior strip (edge beam).

The use of high-strength steels and the acceptance of design methods where the reinforcement is stressed to higher proportions of the yield strength, makes control of flexural cracking by proper reinforcing details more significant than in the past. The width of flexural cracks is proportional to the level of steel tensile stress, thickness of concrete cover over the bars, and spacing of reinforcement. Improved crack control is obtained when the steel reinforcement is well distributed over the zone of maximum concrete tension.

Crack control criteria shall be applied when the tension in the cross-section exceeds 80% of the modulus of rupture, f_r , specified in **LRFD [5.4.2.6]**, for Service I Limit State. The spacing of reinforcement, s, in the layer closest to the tension face shall satisfy:

$$s \leq (700\, \gamma_e / \beta_s f_{ss}) - 2 (d_c) \quad \text{(in)}$$

in which:

$$\beta_s = 1 + (d_c) / 0.7 (h - d_c)$$

Where:

γ_e	=	1.00 for Class 1 exposure condition (bottom reinforcement)
γ_e	=	0.75 for Class 2 exposure condition (top reinforcement)
d_c	=	thickness of concrete cover measured from extreme tension fiber to center of the flexural reinforcement located closest thereto (in)
f_{ss}	=	tensile stress in steel reinforcement (ksi) $\leq$ $0.6f_y$; use factored loads described in 18.3.4.1 at the Service I Limit State, to calculate (f_{ss})
h	=	overall depth of the section (in)

18.4.6.4 Minimum Reinforcement Check

The area of longitudinal slab reinforcement, A_s , should be checked for minimum reinforcement requirement at locations along the structure **LRFD [5.7.3.3.2]**.

The amount of tensile reinforcement shall be adequate to develop a factored flexural resistance, M_r , or moment capacity, at least equal to the lesser of:

M_{cr} (or) 1.33 M_u

$M_{cr} = \gamma_3 (\gamma_1 f_r) S = 1.1 f_r (I_g / c)$; $S = I_g / c$

Where:

f_r	=	$0.24 (f'c)^{1/2}$ modulus of rupture (ksi) **LRFD [5.4.2.6]**
γ_1	=	1.6 flexural cracking variability factor
γ_3	=	0.67 ratio of minimum yield strength to ultimate tensile strength; for <u>A615 Grade 60 reinforcement</u>
I_g	=	gross moment of Inertia (in^4)
c	=	effective slab thickness/2 (in)
M_u	=	total factored moment, calculated using factored loads described in 18.3.3.1 for Strength I Limit State

Select lowest value of [M_{cr} (or) 1.33 M_u] = M_L

The factored resistance, M_r , or moment capacity, shall be calculated as in 18.3.3.2.1.

Then check that, $M_L \leq M_r$ is satisfied.

18.4.6.5 Bar Cutoffs

One-half of the bar steel reinforcement required for maximum moment can be cut off at a point, where the remaining one-half has the moment capacity, or factored resistance, M_r , equal to the total factored moment, M_u , at that point. This is called the theoretical cutoff point.

Select tentative cutoff point at theoretical cutoff point or at a distance equal to the development length from the point of maximum moment, whichever is greater. The reinforcement is extended beyond this tentative point for a distance equal to the effective depth of the slab, 15 bar diameters, or 1/20 of the clear span, whichever is greater. This cutoff point is acceptable, if it satisfies fatigue and crack control criteria. The continuing bars must be fully developed at this point **LRFD [5.11.1.2.1]**.

18.4.6.5.1 Positive Moment Reinforcement

At least one-third of the maximum positive moment reinforcement in simple-spans and one-fourth of the maximum positive moment reinforcement in continuous-spans is extended along the same face of the slab beyond the centerline of the support **LRFD [5.11.1.2.2]**.

18.4.6.5.2 Negative Moment Reinforcement

For negative moment reinforcement, the second tentative cutoff point is at the point of inflection. At least one-third of the maximum negative moment reinforcement must extend beyond this point for a distance equal to the effective depth of the slab, 12 bar diameters, or 1/16 of the clear span, whichever is greater **LRFD [5.11.1.2.3]**.

18.4.7 Transverse Slab Reinforcement

18.4.7.1 Distribution Reinforcement

Distribution reinforcement is placed transversely in the bottom of the slab, to provide for lateral distribution of concentrated loads **LRFD [5.14.4.1]**. The criteria for main reinforcement parallel to traffic is applied. The amount of distribution reinforcement is to be determined as a percentage of the main reinforcing steel required for positive moment as given by the following formula:

$$\text{Percentage} = \frac{100\%}{\sqrt{L}} \leq 50\% \text{ maximum}$$

Where:

L = span length (ft)

The above formula is conservative when applied to slab structures. This specification was primarily drafted for the relatively thin slabs on stringers.

18.4.7.2 Reinforcement in Slab over Piers

If the concrete superstructure rests on a pier cap (with columns) or directly on columns, design of transverse slab reinforcement over the pier is required. A portion of the slab over the pier is designed as a continuous transverse slab member (beam) along the centerline of the substructure. The depth of the assumed section is equal to the depth of the slab or haunch when the superstructure rests directly on columns. When the superstructure rests on a pier cap and the transverse slab member and pier cap act as a unit, the section depth will include the slab or haunch depth plus the cap depth. For a concrete slab, the width of the transverse slab member is equal to one-half the center to center spacing between columns (or 8 foot maximum) for the positive moment zone. The width equals the diameter of the column plus 6 inches for negative moment zone when no pier cap is present. The width equals the cap width for negative moment zone when a pier cap is present. Reference is made to the design example in 18.5 of this chapter for computations relating to transverse reinforcement in slab over the piers.

18.4.8 Shrinkage and Temperature Reinforcement

Reinforcement for shrinkage and temperature stresses shall be provided near surfaces of concrete exposed to daily temperature changes and in structural mass concrete.

The area, A_s , of reinforcement per foot for shrinkage and temperature effects, on each face and in each direction shall satisfy: **LRFD [5.10.8]**

$A_s \geq 1.30\ (b)\ (h)\ /\ 2\ (b+h)\ (f_y)$ and $0.11 \leq A_s \leq 0.60$

Where:

A_s	=	area of reinforcement in each direction and on each face (in^2/ft)
b	=	least width of component section (in)
h	=	least thickness of component section (in)
f_y	=	specified yield strength of reinforcing bars (ksi) $\leq$ 75 ksi

Shrinkage and temperature reinforcement shall not be spaced farther apart than 3.0 times the component thickness or 18 inches. For components greater than 36 inches thick, the spacing shall not exceed 12 inches.

All longitudinal reinforcement and transverse reinforcement in the slab must exceed required A_s (on each face and in each direction), and not exceed maximum spacing.

18.4.9 Shear Check of Slab

Slab bridges designed for dead load and (HL-93) live load moments in conformance with **LRFD [4.6.2.3]** may be considered satisfactory in shear **LRFD [5.14.4.1]**.

18.4.10 Longitudinal Reinforcement Tension Check

The tensile capacity check of longitudinal reinforcement on the flexural tension side of a member is detailed in **LRFD [5.8.3.5]**.

The area of longitudinal reinforcement (in bottom of slab), A_s , should be checked for tensile capacity at the abutments, for dead load and (HL-93) live load on interior and exterior strips. The reinforcement at these locations shall have the capacity to resist the tension in the reinforcement produced by shear.

The factored shear, V_u , shall be calculated using factored loads described in 18.3.3.1 for Strength I Limit State. The factored tension force, T_{fact} , from shear, to be resisted is from **LRFD [Eq'n. 5.8.3.5-2]**, where $V_s = V_p = 0$, is:

$$T_{fact} = [\ V_u / \phi_v\ ] \cot \theta$$

Assume a diagonal crack would start at the inside edge of the bearing area. Assume the crack angle, θ, is 35 degrees. Calculate the distance from the bottom of slab to center of tensile reinforcement. Determine the distance D_{crack} from the end of the slab to the point at which the diagonal crack will intersect the bottom longitudinal reinforcement. Find the development length, ℓ_d , from Table 9.9-2, Chapter 9.

The nominal tensile resistance, T_{nom} , of the longitudinal bars at the crack location is:

$$T_{nom} = A_s f_y\ [\ D_{crack} - (\text{end cover})]\ /\ \ell_d \ \leq\ A_s f_y$$

Then check that, $T_{fact} \leq T_{nom}$ is satisfied.

If the values for T_{fact} and T_{nom} are close, the procedure for determining the crack angle, θ, as outlined in **LRFD [5.8.3.4.2]** should be used.

18.4.11 Uplift Check

Check for uplift at the abutments for (HL-93) live loads **LRFD [C3.4.1, 5.5.4.3]**. Compare the factored dead load reaction to the factored live load reaction. The reactions shall be calculated using factored loads described in 18.3.3.1 for Strength I Limit State. Place (HL-93) live loads in each design lane **LRFD [3.6.1.1.1]** and apply a multiple presence factor **LRFD [3.6.1.1.2]**.

18.4.12 Deflection Joints and Construction Joints

The designer should locate deflection joints in sidewalks and parapets on concrete slab structures according to the Standard *Vertical Face Parapet 'A'* in Chapter 30.

Refer to Standards *Continuous Haunched Slab* and *Continuous Flat Slab* in Chapter 18, for recommended construction joint guidelines.

18.4.13 Reinforcement Tables

Table 18.4-3 applies to: Rectangular Sections with Tension Reinforcement only

- Reinforcement Yield Strength (f_y) = 60,000 psi
- Concrete Compressive Strength (f'_c) = 4,000 psi

R_u	ρ	R_u	ρ	R_u	ρ	R_u	ρ	R_u	ρ
117.9	0.0020	335.6	0.0059	537.1	0.0098	722.6	0.0137	892.0	0.0176
123.7	0.0021	340.9	0.0060	542.1	0.0099	727.2	0.0138	896.1	0.0177
129.4	0.0022	346.3	0.0061	547.1	0.0100	731.7	0.0139	900.2	0.0178
135.2	0.0023	351.6	0.0062	552.0	0.0101	736.2	0.0140	904.4	0.0179
141.0	0.0024	357.0	0.0063	556.9	0.0102	740.7	0.0141	908.5	0.0180
146.7	0.0025	362.3	0.0064	561.8	0.0103	745.2	0.0142	912.5	0.0181
152.4	0.0026	367.6	0.0065	566.7	0.0104	749.7	0.0143	916.6	0.0182
158.1	0.0027	372.9	0.0066	571.6	0.0105	754.2	0.0144	920.7	0.0183
163.8	0.0028	378.2	0.0067	576.5	0.0106	758.7	0.0145	924.8	0.0184
169.5	0.0029	383.5	0.0068	581.4	0.0107	763.1	0.0146	928.8	0.0185
175.2	0.0030	388.8	0.0069	586.2	0.0108	767.6	0.0147	932.8	0.0186
180.9	0.0031	394.1	0.0070	591.1	0.0109	772.0	0.0148	936.9	0.0187
186.6	0.0032	399.3	0.0071	595.9	0.0110	776.5	0.0149	940.9	0.0188
192.2	0.0033	404.6	0.0072	600.8	0.0111	780.9	0.0150	944.9	0.0189
197.9	0.0034	409.8	0.0073	605.6	0.0112	785.3	0.0151	948.9	0.0190
203.5	0.0035	415.0	0.0074	610.4	0.0113	789.7	0.0152	952.9	0.0191
209.1	0.0036	420.2	0.0075	615.2	0.0114	794.1	0.0153	956.8	0.0192
214.8	0.0037	425.4	0.0076	620.0	0.0115	798.4	0.0154	960.8	0.0193
220.4	0.0038	430.6	0.0077	624.8	0.0116	802.8	0.0155	964.7	0.0194
225.9	0.0039	435.8	0.0078	629.5	0.0117	807.2	0.0156	968.7	0.0195
231.5	0.0040	441.0	0.0079	634.3	0.0118	811.5	0.0157	972.6	0.0196
237.1	0.0041	446.1	0.0080	639.0	0.0119	815.8	0.0158	976.5	0.0197
242.7	0.0042	451.3	0.0081	643.8	0.0120	820.1	0.0159	980.4	0.0198
248.2	0.0043	456.4	0.0082	648.5	0.0121	824.5	0.0160	984.3	0.0199
253.7	0.0044	461.5	0.0083	653.2	0.0122	828.8	0.0161	988.2	0.0200
259.3	0.0045	466.6	0.0084	657.9	0.0123	833.1	0.0162	992.1	0.0201
264.8	0.0046	471.7	0.0085	662.6	0.0124	837.3	0.0163	996.0	0.0202
270.3	0.0047	476.8	0.0086	667.3	0.0125	841.6	0.0164	999.8	0.0203
275.8	0.0048	481.9	0.0087	671.9	0.0126	845.9	0.0165	1003.7	0.0204
281.3	0.0049	487.0	0.0088	676.6	0.0127	850.1	0.0166	1007.5	0.0205
286.8	0.0050	492.1	0.0089	681.3	0.0128	854.3	0.0167	1011.3	0.0206
292.2	0.0051	497.1	0.0090	685.9	0.0129	858.6	0.0168	1015.1	0.0207
297.7	0.0052	502.2	0.0091	690.5	0.0130	862.8	0.0169	1018.9	0.0208
303.1	0.0053	507.2	0.0092	695.1	0.0131	867.0	0.0170	1022.7	0.0209
308.6	0.0054	512.2	0.0093	699.7	0.0132	871.2	0.0171	1026.5	0.0210
314.0	0.0055	517.2	0.0094	704.3	0.0133	875.4	0.0172	1030.3	0.0211
319.4	0.0056	522.2	0.0095	708.9	0.0134	879.5	0.0173	1034.0	0.0212
324.8	0.0057	527.2	0.0096	713.5	0.0135	883.7	0.0174	1037.8	0.0213
330.2	0.0058	532.2	0.0097	718.1	0.0136	887.9	0.0175	----	----

Table 18.4-3

R_u (psi) vs. ρ

R_u = coefficient of resistance (psi) = $M_u / \phi\ b\ d_s^2$ ρ = reinforcement ratio = $A_s / b\ d_s$

Table 18.4-4 can be used to select bar size and bar spacing to provide an adequate area of reinforcement to meet design requirements.

Bar Size Number	Nominal Dia. Inches	4 1/2”	5”	5 1/2"	6”	6 1/2"	7”	7 1/2"	8”	8 1/2"	9”	10”	12”
4	0.500	0.52	0.47	0.43	0.39	0.36	0.34	0.31	0.29	0.28	0.26	0.24	0.20
5	0.625	0.82	0.74	0.67	0.61	0.57	0.53	0.49	0.46	0.43	0.41	0.37	0.31
6	0.750	1.18	1.06	0.96	0.88	0.82	0.76	0.71	0.66	0.62	0.59	0.53	0.44
7	0.875	1.60	1.44	1.31	1.20	1.11	1.03	0.96	0.90	0.85	0.80	0.72	0.60
8	1.000	2.09	1.88	1.71	1.57	1.45	1.35	1.26	1.18	1.11	1.05	0.94	0.79
9	1.128	--	2.40	2.18	2.00	1.85	1.71	1.60	1.50	1.41	1.33	1.20	1.00
10	1.270	--	3.04	2.76	2.53	2.34	2.17	2.02	1.90	1.79	1.69	1.52	1.27
11	1.410	--	3.75	3.41	3.12	2.88	2.68	2.50	2.34	2.21	2.08	1.87	1.56

Table 18.4-4

Area of Bar Reinf. (in^2 / ft) vs. Spacing of Bars (in)

18.5 Design Example

E18-1 Continuous 3-Span Haunched Slab, LRFD

Table of Contents

E18-1 Continuous 3-Span Haunched Slab LRFD 3
E18-1.1 Structure Preliminary Data 3
E18-1.2 LRFD Requirements 4
E18-1.3 Trial Slab Depth and Dead Loads (DC, DW) 5
E18-1.4 Vehicular Live Load (LL) and Dynamic Load Allowance (IM) 7
E18-1.5 Minimum Slab Thickness Criteria 8
E18-1.5.1 Live Load Deflection Criteria 8
E18-1.5.2 Dead Load Deflection (Camber) Criteria 9
E18-1.6 Live Load Distribution (Interior Strip) 10
E18-1.6.1 Strength and Service Limit State 10
E18-1.6.2 Fatigue Limit State 11
E18-1.7 Longitudinal Slab Reinforcement (Interior Strip) 13
E18-1.7.1 Positive Moment Reinforcement for Span 1 13
E18-1.7.1.1 Design for Strength 13
E18-1.7.1.2 Check for Fatigue 15
E18-1.7.1.3 Check Crack Control 17
E18-1.7.1.4 Minimum Reinforcement Check 19
E18-1.7.2 Negative Moment Reinforcement at Piers 20
E18-1.7.2.1 Design for Strength 20
E18-1.7.2.2 Check for Fatigue 20
E18-1.7.2.3 Check Crack Control 21
E18-1.7.2.4 Minimum Reinforcement Check 23
E18-1.7.3 Positive Moment Reinforcement for Span 2 24
E18-1.7.3.1 Design for Strength 24
E18-1.7.3.2 Check for Fatigue 25
E18-1.7.3.3 Check Crack Control 26
E18-1.7.3.4 Minimum Reinforcement Check 27
E18-1.7.4 Negative Moment Reinforcement at Haunch/Slab Intercepts 27
E18-1.7.5 Bar Steel Cutoffs 28
E18-1.7.5.1 Span 1 Positive Moment Reinforcement (Cutoffs) 28
E18-1.7.5.1.1 Fatigue Check (at Cutoff) (0.74 Pt.) 30
E18-1.7.5.1.2 Crack Control Check (at Cutoff) (0.74 Pt.) 31
E18-1.7.5.1.3 Minimum Reinforcement Check 31
E18-1.7.5.2 Span 2 Positive Moment Reinforcement (Cutoffs) 31
E18-1.7.5.2.1 Fatigue Check (at Cutoff) (0.23 Pt.) 34
E18-1.7.5.2.2 Crack Control Check (at Cutoff) (0.23 Pt.) 36
E18-1.7.5.2.3 Minimum Reinforcement Check 37
E18-1.7.5.3 Span 1 Negative Moment Reinforcement (Cutoffs) 37
E18-1.7.5.3.1 Fatigue Check (at Cutoff) (0.62 Pt.) 39
E18-1.7.5.3.2 Crack Control Check (at Cutoff) (0.62 Pt.) 41
E18-1.7.5.3.3 Minimum Reinforcement Check 42
E18-1.7.5.4 Span 2 Negative Moment Reinforcement (Cutoffs) 42
E18-1.7.5.4.1 Fatigue Check (at Cutoff) (0.25 Pt.) 42
E18-1.7.5.4.2 Crack Control Check (at Cutoff) (0.25 Pt.) 44
E18-1.7.5.4.3 Minimum Reinforcement Check 45
E18-1.8 Evaluation of Longitudinal Reinforcement for Permit Vehicle 45
E18-1.9 Longitudinal Reinforcement in Bottom of Haunch 45
E18-1.10 Live Load Distribution (Exterior Strip) 48
E18-1.10.1 Strength and Service Limit State 48
E18-1.11 Longitudinal Slab Reinforcement (Exterior Strip) 51
E18-1.11.1 Positive Moment Reinforcement for Span 1 51
E18-1.11.1.1 Design for Strength 51

E18-1.11.1.2 Check Crack Control....52
E18-1.11.1.3 Minimum Reinforcement Check....52
E18-1.11.2 Positive Moment Reinforcement for Span 2....52
E18-1.11.2.1 Design for Strength....52
E18-1.11.2.2 Check Crack Control....53
E18-1.11.2.3 Minimum Reinforcement Check....53
E18-1.11.3 Negative Moment Reinforcement at Piers....53
E18-1.11.3.1 Design for Strength....53
E18-1.11.3.2 Check Crack Control....54
E18-1.11.3.3 Minimum Reinforcement Check....54
E18-1.11.4 Bar Steel Cutoffs....54
E18-1.11.4.1 Span 1 Positive Moment Reinforcement (Cutoffs)....55
E18-1.11.4.1.1 Check Crack Control....55
E18-1.11.4.2 Span 2 Positive Moment Reinforcement (Cutoffs)....55
E18-1.11.4.2.1 Check Crack Control....55
E18-1.11.4.3 Span 1 Negative Moment Reinforcement (Cutoffs)....55
E18-1.11.4.3.1 Check Crack Control....55
E18-1.11.4.4 Span 2 Negative Moment Reinforcement (Cutoffs)....55
E18-1.11.4.4.1 Check Crack Control....56
E18-1.12 Transverse Distribution Reinforcement....56
E18-1.13 Shrinkage and Temperature Reinforcement Check....56
E18-1.13.1 Longitudinal and Transverse Distribution Reinforcement....57
E18-1.14 Shear Check of Slab....58
E18-1.15 Longitudinal Reinforcement Tension Check....58
E18-1.16 Transverse Reinforcement in Slab over the Piers....59
E18-1.16.1 Dead Load Moments....60
E18-1.16.2 Live Load Moments....62
E18-1.16.3 Positive Moment Reinforcement for Pier Cap....65
E18-1.16.3.1 Design for Strength....65
E18-1.16.4 Negative Moment Reinforcement for Pier Cap....66
E18-1.16.4.1 Design for Strength....66
E18-1.16.5 Positive Moment Reinforcement for Transverse Slab Member....67
E18-1.16.6 Negative Moment Reinforcement for Transverse Slab Member....67
E18-1.16.6.1 Design for Strength....67
E18-1.16.7 Shear Check of Slab at the Pier....67
E18-1.16.8 Minimum Reinforcement Check for Transverse Slab Member....69
E18-1.16.9 Crack Control Check for Transverse Slab Member....71
E18-1.17 Shrinkage and Temperature Reinforcement Check....72
E18-1.17.1 Transverse Slab Member and Other Transverse Reinforcement....72
E18-1.18 Check for Uplift at Abutments....74
E18-1.19 Deflection Joints and Construction Joints....75

E18-1 Continuous 3-Span Haunched Slab - LRFD

A continuous 3-span haunched slab structure is used for the design example. The same basic procedure is applicable to continuous flat slabs. The *AASHTO LRFD Bridge Design Specifications* are followed as stated in the text of this chapter. Design using a slab width equal to one foot. (***Example is current through LRFD Seventh Edition - 2015 Interim***)

E18-1.1 Structure Preliminary Data

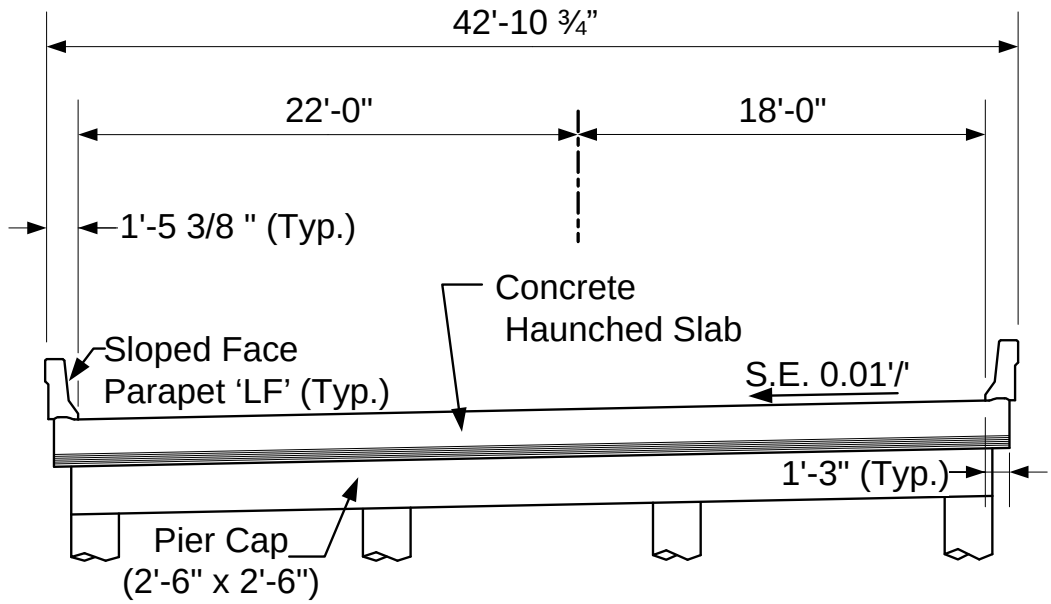

Figure E18.1

Section Perpendicular to Centerline

Live Load: HL-93
(A1) Fixed Abutments at both ends
Parapets placed after falsework is released

Geometry:

$L_1 := 38.0$	ft	Span 1
$L_2 := 51.0$	ft	Span 2
$L_3 := 38.0$	ft	Span 3
$slab_{width} := 42.5$	ft	out to out width of slab
$skew := 6$	deg	skew angle (RHF)
$w_{roadway} := 40.0$	ft	clear roadway width

Material Properties: (See 18.2.2)

$f'_c := 4$	ksi	concrete compressive strength

$f_y := 60$ ksi yield strength of reinforcement

$E_c := 3800$ ksi modulus of elasticity of concrete

$E_s := 29000$ ksi modulus of elasticity of reinforcement

$n := 8$ E_s / E_c (modular ratio)

Weights:

$w_c := 150$ pcf concrete unit weight

$w_{LF} := 387$ plf weight of Type LF parapet (each)

E18-1.2 LRFD Requirements

For concrete slab design, the slab dimensions and the size and spacing of reinforcement shall be selected to satisfy the equation below for all appropriate Limit States: (See 18.3.2.1)

$$Q = \Sigma \eta_i \cdot \gamma_i \cdot Q_i \leq \phi \cdot R_n = R_r \qquad \text{(Limit States Equation)}$$

The value of the load modifier is:

$\eta_i := 1.0$ for all Limit States (See 18.3.2.2)

The force effect, Q_i, is the moment, shear, stress range or deformation caused by applied loads.

The applied loads from **LRFD [3.3.2]** are:

DC = dead load of slab (DC_{slab}), ½ inch wearing surface ($DC_{1/2"WS}$) and parapet dead load (DC_{para}) - (See E18-1.3)

DW = dead load of future wearing surface (DW_{FWS}) - (See E18-1.3)

LL+IM = vehicular live load (LL) with dynamic load allowance (IM) - (See E18-1.4)

The Influence of ADTT and skew on force effects, Q_i, are ignored for slab bridges (See 18.3.2.2).

The values for the load factors, γ_i, (for each applied load) and the resistance factors, ϕ, are found in Table E18.1.

The total factored force effect, Q, must not exceed the factored resistance, R_r. The nominal resistance, R_n, is the resistance of a component to the force effects.

		Strength I	Service I	Fatigue I
Load Factor (DC)	γ_{DC}	LRFD Table 3.4.1-2 0.90 (min.) 1.25 (max.)	LRFD Table 3.4.1-1 1.00	---
Load Factor (DW)	γ_{DW}	LRFD Table 3.4.1-2 0.65 (min.) 1.50 (max.)	LRFD Table 3.4.1-1 1.00	---
Load Factor (LL+IM)	γ_{LL+IM}	LRFD Table 3.4.1-1 1.75	LRFD Table 3.4.1-1 1.00	LRFD Table 3.4.1-1 1.50
Resistance Factor	ϕ	LRFD 5.5.4.2 0.90 flexure[1] 0.90 shear	LRFD 1.3.2.1 1.00	LRFD C1.3.2.1 1.00

Table E18.1
Load and Resistance Factors

[1] All reinforced concrete sections in this example were found to be tension-controlled sections as defined in **LRFD [5.7.2.1]**; therefore $\phi_f = 0.90$

E18-1.3 Trial Slab Depth and Dead Loads (DC, DW)

Refer to Table 18.2-1 in 18.2.3 for an interior span length, L_2, of 51 feet. The trial slab depth, d_{slab} (not including the 1/2 inch wearing surface), is estimated at:

$d_{slab} := 17$ in

The haunch depth, D_{haunch}, is approximately equal to d_{slab} divided by 0.6:

$$D_{haunch} := \frac{d_{slab}}{0.6} \rightarrow \frac{17}{0.6}$$

$D_{haunch} := \text{round}(D_{haunch})$ $\boxed{D_{haunch} = 28}$ in

D_{haunch} does not include the 1/2 inch wearing surface.

The length of the haunch, L_{haunch}, measured from the C/L of pier to the end of haunch, is approximately (0.15 to 0.18)*L_2. (L_2 equals interior span length = 51 feet)

$L_{haunchMin} := 0.15 \cdot L_2$ $\boxed{L_{haunchMin} = 7.65}$ ft

$L_{haunchMax} := 0.18 \cdot L_2$ $\boxed{L_{haunchMax} = 9.18}$ ft

Select the value for L_{haunch} to the nearest foot : $\boxed{L_{haunch} = 8}$ ft

The slab dead load, DC_{slab}, and the section properties of the slab, do not include the 1/2 inch wearing surface.

The dead load for the 17 inch slab depth, for a one foot design width, is calculated as follows:

$$DC_{17slab} := \frac{d_{slab}}{12} \cdot 1.0 \cdot w_c \rightarrow \frac{17}{12} \cdot 1.0 \cdot 150$$

$DC_{17slab} = 213$ plf

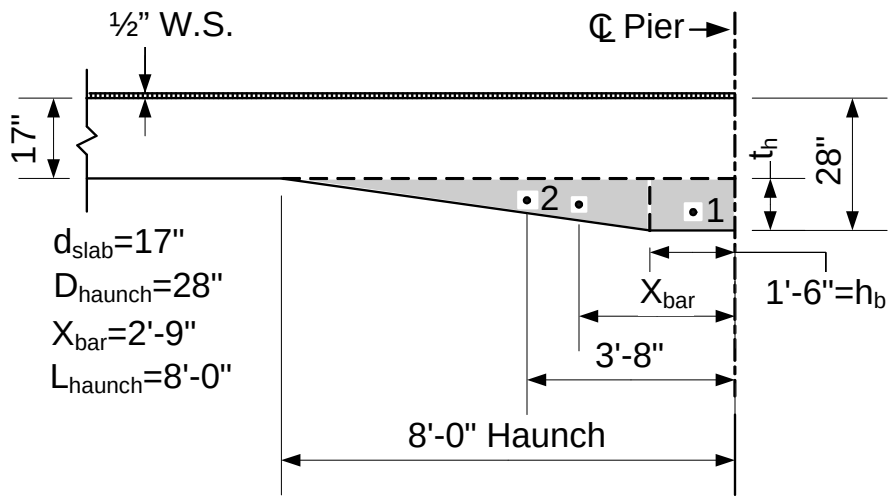

Figure E18.2

Haunched Section at Pier

For hand computations, determine the partial haunch dead load in the shaded area in Figure E18.2. Determine the center of gravity, X_{bar}, for this area and distribute its weight uniformly over twice this distance. Haunch dead load is often computed by computer programs.

The partial haunch thickness, t_h, equals:

$$t_h := D_{haunch} - d_{slab}$$

$t_h = 11$ in

For a 2.5 ft. wide pier cap, the bottom width of the haunch is: $h_b := \frac{2.5}{2} + 0.25$ $h_b = 1.5$ ft

The area of sections (1 & 2) in Figure E18.2 and the location of their center of gravity is:

$$A_1 := h_b \cdot \frac{t_h}{12} \qquad A_2 := \frac{(L_{haunch} - h_b) \cdot \frac{t_h}{12}}{2}$$

$A_1 = 1.38$ ft^2

$A_2 = 2.98$ ft^2

$$X_{bar1} := \frac{h_b}{2} \qquad X_{bar2} := \frac{L_{haunch} - h_b}{3} + h_b$$

$X_{bar1} = 0.75$ ft

$X_{bar2} = 3.67$ ft

The location of the center of gravity, X_{bar}, of the shaded area in Figure E18.2 is:

$$X_{bar} := \frac{A_1 \cdot X_{bar1} + A_2 \cdot X_{bar2}}{A_1 + A_2}$$ $\boxed{X_{bar} = 2.75}$ ft

The haunch dead load is uniformly distributed over a distance of $2 \cdot X_{bar} = 5.5$ feet.
For a one foot design width, its value is calculated as follows:

$$DC_{haunch} := \frac{A_1 + A_2}{2 \cdot X_{bar}} \cdot 1.0 \cdot w_c$$ $\boxed{DC_{haunch} = 119}$ plf

The dead load of the slab, DC_{slab} , is the total dead load from DC_{17slab} and DC_{haunch}.

The parapet dead load is uniformly distributed over the full width of the slab when designing for an interior strip of slab. The parapet dead load on a one foot design width, for an interior strip, is calculated as follows:

$$DC_{para} := \frac{2 \cdot w_{LF}}{slab_{width}} \rightarrow \frac{2 \cdot 387}{42.5}$$ $\boxed{DC_{para} = 18}$ plf

The parapet dead load is uniformly distributed over the exterior strip width of the slab when designing for an exterior strip (edge beam).

The 1/2 inch wearing surface dead load and a possible future wearing surface (FWS) dead load must also be included in the design of the slab. Therefore for a one foot design width:

$DC_{1/2"WS} = (0.5/12)(1.0)(w_c)$ $\boxed{DC_{1/2"WS} = 6}$ plf

$DW_{FWS} = (20)(1.0)$ $\boxed{DW_{FWS} = 20}$ plf

E18-1.4 Vehicular Live Load (LL) and Dynamic Load Allowance (IM)

The live load combinations used for design are:

LL#1:	Design Tandem (+ IM) + Design Lane Load	**LRFD [3.6.1.3.1]**
LL#2:	Design Truck (+ IM) + Design Lane Load	**LRFD [3.6.1.3.1]**
LL#3:	90% [Double Design Trucks (+ IM) + Design Lane Load]	**LRFD [3.6.1.3.1]**
LL#4:	Fatigue Truck (+ IM)	**LRFD [3.6.1.4.1]**
LL#5:	Design Truck (+ IM)	**LRFD [3.6.1.3.2]**
LL#6:	25% [Design Truck (+ IM)] + Design Lane Load	**LRFD [3.6.1.3.2]**

Table E18.2
Live Load Combinations

The live load combinations and dynamic load allowance, IM, **LRFD [3.6.2]** are applied to the Limit States as shown in Table E18.3.

Where (IM) is required, multiply the loads by (1 + IM/100) to include the dynamic effects of the load. (IM) is not applied to the Design Lane Load.

The live load force effect, Q_i, shall be taken as the largest from the live loads shown in Table E18.3 for that Limit State.

Strength I Limit State:	LL#1 , LL#2 , LL#3 [1]	IM = 33%
Service I Limit State: (for crack control criteria)	LL#1 , LL#2 , LL#3 [1]	IM = 33%
Service I Limit State: (for LL deflection criteria)	LL#5 , LL#6	IM = 33%
Fatigue I Limit State:	LL#4 (single Fatigue Truck)	IM = 15%

Table E18.3
Live Loads for Limit States

[1] (LL#3) is used to calculate negative live load moments between points of contraflexure and also reactions at interior supports. The points of contraflexure are located by placing a uniform load across the entire structure. For these moments and reactions, the results calculated from (LL#3) are compared with (LL#1) and (LL#2) results, and the critical value is selected.

E18-1.5 Minimum Slab Thickness Criteria

Check adequacy of chosen slab thickness by looking at live load deflection and dead load deflection (camber) criteria, using Service I Limit State.

E18-1.5.1 Live Load Deflection Criteria

All concrete slab structures shall be designed to meet live load deflection limits **LRFD [2.5.2.6.2]**, using Service I Limit State.

Looking at E18-1.2: $\eta_i := 1.0$ and from Table E18.1: $\gamma_{LLser1} := 1.0$ $\phi_{ser1} := 1.0$

$Q_i = \Delta_{LLser1}$ = largest live load deflection caused by live loads (LL#5 or LL#6)

See Table E18.2 and E18.3 in E18-1.4 for description of live loads and dynamic load allowance (IM)

$Q = \eta_i \cdot \gamma_{LLser1} \cdot \Delta_{LLser1} = (1.0) \cdot (1.0) \cdot \Delta_{LLser1}$

Use (3) design lanes **LRFD [3.6.1.1.1]**, multiple presence of live load factor (m=0.85) **LRFD [3.6.1.1.2]** and gross moment of Inertia, I_g, based on the entire slab width acting as a unit, to calculate live load deflection. Use modulus of elasticity, E_c = 3800 ksi.

$R_n = \frac{L}{1200}$ = max. live load def'l. (L = span length)

$R_r = \phi_{ser1} \cdot R_n = 1.00 \cdot \frac{L}{1200}$

Therefore: $\Delta_{LLser1} \le \frac{L}{1200}$ (Limit States Equation)

The largest live load deflection is caused by live load (LL#5)

Span 1: $\Delta_{LLser1} = 0.29 \text{ in} < \frac{L_1}{1200} = 0.38 \text{ in}$ O.K.

Span 2: $\Delta_{LLser1} = 0.47 \text{ in} < \frac{L_2}{1200} = 0.51 \text{ in}$ O.K.

E18-1.5.2 Dead Load Deflection (Camber) Criteria

All concrete slab structures shall be designed to meet dead load deflection (camber) limits **LRFD [5.7.3.6.2]**, using Service I Limit State. Dead load deflections are computed using the gross moment of inertia, I_g. All dead loads are to be uniformly distributed across the slab width.

Looking at E18-1.2: $\eta_i := 1.0$

and from Table E18.1: $\gamma_{DCser1} := 1.0$ $\gamma_{DWser1} := 1.0$ $\phi_{ser1} := 1.0$

$Q_i = \Delta_{DL}$ = dead load deflection due to applied loads (DC, DW) as stated in E18-1.2.

$Q = \eta_i \cdot \gamma \cdot (\Delta_{DL}) = (1.0) \cdot (1.0) \cdot (\Delta_{DL})$

The Bureau of Structures currently calculates full camber as three times the dead load deflection. The maximum allowable camber for continuous spans is 1 3/4 inches (See 18.4.4.2). Therefore, the allowable dead load deflection is 1/3 of the maximum allowable camber. Use modulus of elasticity, E_c = 3800 ksi.

R_n = (max. allowable camber)/3 = 1 3/4 inches /3 = 0.583 inches

$R_r = \phi_{ser1} \cdot R_n = 1.00 \cdot (0.583) = 0.583 \text{ in}$

Therefore: $\Delta_{DL} \le 0.583 \text{ in}$ (Limit States Equation)

Δ_{DL} (at 0.4 pt Span 1) = 0.17 in < 0.583 in O.K.

Δ_{DL} (at C/L of Span 2) = 0.27 in < 0.583 in O.K.

E18-1.6 Live Load Distribution (Interior Strip)

Live loads are distributed over an equivalent width, E, as calculated below. Equivalent strip widths for slab bridges are covered in **LRFD [4.6.2.1.2, 4.6.2.3].** The live loads to be placed on these widths are axle loads (i.e., two lines of wheels) and the full lane load. The equivalent distribution width applies for both live load moment and shear.

Single - Lane Loading: $E = 10.0 + 5.0 \cdot (L_1 \cdot W_1)^{0.5}$

Multi - Lane Loading: $E = 84.0 + 1.44 \cdot (L_1 \cdot W_1)^{0.5} \leq 12.0 \cdot \frac{W}{N_L}$

Where:

E = equivalent distribution width (in)

L_1 = modified span length taken equal to the lesser of the actual span or 60.0 ft (ft)

W_1 = modified edge to edge width of bridge taken to be equal to the lesser of the actual width or 60.0 ft for multi-lane loading, or 30.0 ft for single-lane loading (ft)

W = physical edge to edge width of bridge (ft)

N_L = number of design lanes as specified in **LRFD [3.6.1.1.1]**

For single-lane loading:

(Span 1, 3) $E := 10.0 + 5.0 \cdot (38 \cdot 30)^{0.5}$ $\boxed{E = 178}$ in

(Span 2) $E := 10.0 + 5.0 \cdot (51 \cdot 30)^{0.5}$ $\boxed{E = 205}$ in

For multi-lane loading:

$$12.0 \cdot \frac{W}{N_L} = 12.0 \cdot \frac{42.5}{3} = 170 \text{ in}$$

(Span 1, 3) $E := 84.0 + 1.44 \cdot (38 \cdot 42.5)^{0.5}$ $\boxed{E = 141}$ in < 170 in O.K.

(Span 2) $E := 84.0 + 1.44 \cdot (51 \cdot 42.5)^{0.5}$ $\boxed{E = 151}$ in < 170 in O.K.

E18-1.6.1 Strength and Service Limit State

Use the smaller equivalent widths, which are from multi-lane loading, when (HL-93) live load is to be distributed, for Strength I Limit State and Service I Limit State.

The distribution factor (DF) is computed for a design slab width equal to one foot.

$$DF = \frac{1}{E}$$ (where E is in feet)

The multiple presence factor (m) has been included in the equations for distribution width (E) and therefore aren't used to adjust the distribution factor (DF) **LRFD [3.6.1.1.2]**.

For spans 1 & 3: (E = 141" = 11.75')

$$DF := \frac{1}{11.75} \qquad \boxed{DF = 0.0851} \ \frac{lanes}{ft - slab}$$

For span 2: (E =151" = 12.583')

$$DF := \frac{1}{12.583} \qquad \boxed{DF = 0.0795} \ \frac{lanes}{ft - slab}$$

Look at the distribution factor calculated for each span and select the largest value. This single value is to be applied along the entire length of the bridge.

Therefore, <u>use DF = 0.0851 lanes/ft-slab</u> for all spans.

E18-1.6.2 Fatigue Limit State

Use equivalent widths from single-lane loading to check fatigue stress range criteria. For the Fatigue Limit State only one design truck (Fatigue Truck) is present **LRFD [3.6.1.4]**. Calculate the distribution factor (DF) and divide it by (1.20) to remove the effects of the multiple presence factor (m), which are present in the equation for equivalent width (E) **LRFD [3.6.1.1.2]**.

The distribution factor (DF) is computed for a <u>design slab width</u> equal to <u>one foot</u>.

$$DF = \frac{1}{E \cdot (1.20)} \qquad \text{(where E is in ft)}$$

For spans 1 & 3: (E = 178" = 14.833')

$$DF := \frac{1}{(14.833) \cdot (1.20)} \qquad \boxed{DF = 0.0562} \ \frac{lanes}{ft - slab}$$

For span 2: (E =205" = 17.083')

$$DF := \frac{1}{(17.083) \cdot (1.20)} \qquad \boxed{DF = 0.0488} \ \frac{lanes}{ft - slab}$$

Look at the distribution factor calculated for each span and select the largest value. This single value is to be applied along the entire length of the bridge.

Therefore, <u>use DF = 0.0562 lanes/ft.-slab</u> for all spans.

Table E18.4 Unfactored Moments (kip - ft) (on a one foot design width) **Interior Strip**

Point	M_{DC}[1]	M_{DW}[2]	DF=0.0851 (IM not used) +Design Lane	DF=0.0851 (IM not used) -Design Lane	DF=0.0851 (incl. IM=33%) +Design Tandem	DF=0.0851 (incl. IM=33%) -Design Tandem
0.1	9.6	0.8	3.2	-1.0	17.2	-3.2
0.2	15.9	1.3	5.5	-1.9	29.0	-6.4
0.3	18.7	1.6	7.1	-2.9	35.5	-9.6
0.4	18.1	1.5	7.9	-3.8	37.5	-12.8
0.5	14.1	1.2	7.9	-4.8	36.2	-16.0
0.6	6.6	0.6	7.2	-5.7	31.9	-19.2
0.7	-4.2	-0.4	5.6	-6.6	24.7	-22.3
0.789	-17.1	-1.5	3.7	-7.6	16.8	-25.1
0.8	-18.5	-1.6	3.5	-7.8	15.8	-25.5
0.9	-36.5	-3.1	2.4	-10.8	8.4	-28.7
1.0	-59.2	-4.9	2.2	-15.5	9.2	-31.9
1.1	-29.8	-2.5	1.9	-8.8	7.6	-21.8
1.157	-16.9	-1.4	2.3	-6.2	13.8	-19.8
1.2	-8.1	-0.7	2.9	-4.9	18.9	-18.4
1.3	7.2	0.6	5.4	-3.8	28.9	-14.9
1.4	16.4	1.4	7.5	-3.8	35.4	-11.4
1.5	19.6	1.6	8.2	-3.8	37.4	-8.0

Point	DF=0.0851 (incl. IM=33%) +Design Truck	DF=0.0851 (incl. IM=33%) -Design Truck	DF=0.0851 [3] (IM not used) (90%) of -Design Lane	DF=0.0851 [3] (incl. IM=33%) (90%) of -Double Design Trucks	DF=0.0562 (incl. IM=15%) +Fatigue Truck	DF=0.0562 (incl. IM=15%) -Fatigue Truck
0.1	18.1	-3.9	---	---	7.7	-1.4
0.2	29.3	-7.7	---	---	12.9	-2.8
0.3	34.4	-11.6	---	---	15.8	-4.2
0.4	35.4	-15.4	---	---	16.7	-5.5
0.5	33.9	-19.3	---	---	16.0	-6.9
0.6	30.7	-23.1	---	---	14.3	-8.4
0.7	23.3	-27.0	-6.0	-24.3	11.3	-9.8
0.789	14.0	-30.5	-6.9	-27.4	7.8	-11.0
0.8	13.0	-30.9	-7.0	-27.8	7.5	-11.2
0.9	9.0	-34.7	-9.7	-31.4	3.9	-16.0
1.0	10.1	-39.9	-13.9	-35.0	3.9	-23.0
1.1	8.0	-23.8	-8.0	-22.6	4.6	-13.6
1.157	12.1	-21.7	-5.6	-20.2	6.9	-9.0
1.2	15.3	-20.1	-4.4	-18.5	8.7	-7.7
1.3	27.7	-16.4	---	---	13.1	-6.3
1.4	35.4	-12.5	---	---	15.9	-4.8
1.5	37.2	-8.8	---	---	16.7	-3.4

Superscripts for Table E18.4 are defined on the following page.

In Table E18.4:

1 M_{DC} is moment due to slab dead load (DC_{slab}), parapet dead load (DC_{para}) after its weight is distributed across width of slab, and 1/2 inch wearing surface ($DC_{1/2"WS}$).

2 M_{DW} is moment due to future wearing surface (DW_{FWS}).

3 The points of contraflexure are located at the (0.66 pt.) of span 1 and the (0.25 pt.) of span 2, when a uniform load is placed across the entire structure. Negative moments in these columns are shown between the points of contraflexture per **LRFD [3.6.1.3.1]**.

E18-1.7 Longitudinal Slab Reinforcement (Interior Strip)

Select longitudinal reinforcement for an Interior Strip.

The concrete cover on the top bars is 2 1/2 inches, which includes a 1/2 inch wearing surface. The bottom bar cover is 1 1/2 inches. (See 18.4.6)

E18-1.7.1 Positive Moment Reinforcement for Span 1

Examine the 0.4 point of span 1

E18-1.7.1.1 Design for Strength

Design reinforcement using Strength I Limit State and considerations and assumptions detailed in **LRFD [5.5.4, 5.7.2]**

Looking at E18-1.2: $\eta_i := 1.0$

and from Table E18.1: $\gamma_{DCmax} := 1.25$ $\gamma_{DWmax} := 1.50$ $\gamma_{LLstr1} := 1.75$ $\phi_f := 0.9$

$Q_i = M_{DC}, M_{DW}, M_{LL+IM}$ **LRFD [3.6.1.2, 3.6.1.3.3]**; moments due to applied loads as stated in E18-1.2

$$Q = M_u = \eta_i\,[\gamma_{DCmax}(M_{DC}) + \gamma_{DWmax}(M_{DW}) + \gamma_{LLstr1}(M_{LL+IM})]$$

$$= 1.0\,[1.25(M_{DC}) + 1.50(M_{DW}) + 1.75(M_{LL+IM})]$$

$$R_n = M_n = A_s \cdot f_s \cdot \left(d_s - \frac{a}{2}\right) \qquad \text{(See 18.3.3.2.1)}$$

$$M_r = \phi_f \cdot M_n = 0.90 \cdot A_s \cdot f_s \cdot \left(d_s - \frac{a}{2}\right)$$

Therefore : $M_u \le M_r$ (Limit States Equation)

$$M_u = 1.25(M_{DC}) + 1.50(M_{DW}) + 1.75(M_{LL+IM}) \le 0.90\,A_s\,f_s\,(d_s - a/2)$$

The positive live load moment shall be the largest caused by live loads (LL#1 or LL#2). See Table E18.2 and E18.3 in E18-1.4 for description of live loads and dynamic load allowance (IM)

From Table E18.4, the largest live load moment is from (LL#1), therefore at (0.4 pt. - span 1):

M_{DC} = 18.1 kip-ft M_{DW} = 1.5 kip-ft M_{LL+IM} = 7.9 + 37.5 = 45.4 kip-ft

$M_u := 1.25\cdot(18.1) + 1.50\cdot(1.5) + 1.75\cdot(45.4)$ $\boxed{M_u = 104.3}$ kip-ft

$b := 12$ inches (for a one foot design width)

$d_s = d_{slab}$ - bott. bar clr. - 1/2 bott. bar dia.

$d_s := 17 - 1.5 - 0.6$ $\boxed{d_s = 14.9}$ in

Calculate R_u, coefficient of resistance:

$$R_u = \frac{M_u}{\phi_f\cdot b\cdot d_s^2} \qquad R_u := \frac{104.3\cdot(12)\cdot 1000}{0.9\cdot(12)\cdot 14.9^2} \qquad \boxed{R_u = 522} \text{ psi}$$

Solve for ρ, reinforcement ratio, using Table 18.4-3 (R_u vs ρ) in 18.4.13;

$\rho := 0.0095$

$$A_s = \rho\cdot(b)\cdot d_s \qquad A_s := 0.0095\cdot(12)14.9 \qquad \boxed{A_s = 1.7} \ \frac{in^2}{ft}$$

Try: #9 at 7" c-c spacing (A_s = 1.71 in^2/ft) from Table 18.4-4 in 18.4.13

Calculate the depth of the compressive stress block.

Assume $f_s = f_y$ (See 18.3.3.2.1) ; for f'_c = 4.0 ksi : $\alpha_1 := 0.85$ and $\beta_1 = 0.85$

$$a = \frac{A_s\cdot f_y}{\alpha_1\cdot f'_c\cdot b} \qquad a := \frac{1.71\cdot(60)}{0.85\cdot(4.0)\cdot 12} \qquad \boxed{a = 2.51} \text{ in}$$

If $\frac{c}{d_s} \le 0.6$ for (f_y= 60 ksi) **LRFD [5.7.2.1]**, then reinforcement has yielded and the assumption is correct.

$$\beta_1 := 0.85 \qquad c := \frac{a}{\beta_1} \qquad \boxed{c = 2.96} \text{ in}$$

$\frac{c}{d_s} = 0.2 < 0.6$ therefore, the reinforcement will yield.

$$M_r = 0.90\cdot A_s\cdot f_y\cdot\left(d_s - \frac{a}{2}\right)$$

$$M_r := 0.9\cdot(1.71)\cdot 60.0\cdot\left(\frac{14.9 - \frac{2.51}{2}}{12}\right) \qquad \boxed{M_r = 105} \text{ kip-ft}$$

Therefore, M_u = 104.3 kip-ft < M_r = 105 kip-ft O.K.

E18-1.7.1.2 Check for Fatigue

Check reinforcement using Fatigue I Limit State and considerations and assumptions detailed in **LRFD [5.5.3, 5.7.1, 9.5.3]**.

Looking at E18-1.2: $\eta_i := 1.0$ and from Table E18.1: $\gamma_{LLfatigue} := 1.5$ $\phi_{fatigue} := 1.0$

When reinforcement remains in tension throughout the fatigue cycle,

$Q_i = \Delta f = f_{range}$ = stress range in bar reinforcement due to flexural moment range (M_{range}) caused by Fatigue Truck (LL#4). See Table E18.2 and E18.3 in E18-1.4 for description of live load and dynamic load allowance (IM)

$Q = \eta_i \cdot \gamma_{LLfatigue} \cdot f_{range} = (1.0) \cdot (1.5) \cdot f_{range}$

$R_n = (\Delta F_{TH}) = 24 - 0.33 \cdot f_{min}$ for f_y = 60 ksi (See 18.3.5.2.1)

$R_r = \phi_{fatigue} \cdot R_n = 1.0 \cdot (24 - 0.33 \cdot f_{min})$

Therefore: $1.5 \cdot (f_{range}) \le 24 - 0.33 \cdot f_{min}$ (Limit States Equation)

From Table E18.4, the moments at (0.4 pt.) of span 1 are:

M_{DC} = 18.1 kip-ft M_{DW} = 1.5 kip-ft

+Fatigue Truck = 16.7 kip-ft -Fatigue Truck = -5.5 kip-ft

In regions of tensile stress due to permanent loads, fatigue criteria should be checked.

The section properties for fatigue shall be based on cracked sections where the sum of stresses, due to permanent loads, and ($\gamma_{LLfatigue}$ = 1.5) times the fatigue load is tensile and exceeds $0.095\sqrt{f'_c}$ **LRFD [5.5.3.1]**

Allowable tensile stress for fatigue (cracking stress):

$f_{tensile} = 0.095\sqrt{f'_c} = 0.095 \cdot \sqrt{4}$ $\boxed{f_{tensile} = 0.19}$ ksi

Calculate fatigue moment and then select section properties:

$M_{fatigue}$ = 1.0(M_{DC}) + 1.0(M_{DW}) +1.5(Fatigue Truck)

$M_{fatigueMax} := 1.0 \cdot (18.1) + 1.0(1.5) + 1.5(16.7)$ $\boxed{M_{fatigueMax} = 44.65}$ kip-ft (tension)

$M_{fatigueMin} := 1.0 \cdot (18.1) + 1.0(1.5) + 1.5(-5.5)$ $\boxed{M_{fatigueMin} = 11.35}$ kip-ft (tension)

Calculate stress due to $M_{fatigue}$: $f_{fatigue} = \frac{M_{fatigue} \cdot (y)}{I_g}$

$y = \frac{d_{slab}}{2} = \frac{17}{2}$ $\boxed{y = 8.5}$ in

$I_g = \frac{1}{12} \cdot b \cdot d_{slab}^3 = \frac{1}{12} \cdot (12)\, 17^3$ $\boxed{I_g = 4913}$ in^4

$f_{fatigueMax} := \frac{M_{fatigueMax} \cdot (y) \cdot 12}{I_g}$ $\boxed{f_{fatigueMax} = 0.93}$ ksi (tension) > $f_{tensile}$ (0.190 ksi)

$f_{fatigueMin} := \frac{M_{fatigueMin} \cdot (y) \cdot 12}{I_g}$ $\boxed{f_{fatigueMin} = 0.24}$ ksi (tension) > $f_{tensile}$ (0.190 ksi)

Values of $f_{fatigue}$ exceed $f_{tensile}$ during the fatigue cycle, therefore analyze fatigue using cracked section properties.

Looking at values of $M_{fatigue}$, shows that the reinforcement remains in tension throughout the fatigue cycle. Therefore:

M_{range} = (+ Fatigue Truck) - (-Fatigue Truck)

$M_{range} := 16.7 - (-5.5)$ $\boxed{M_{range} = 22.2}$ kip-ft

The moment arm used in equations below is: (j) (d_s) Therefore, using:

$A_s = 1.7 \ \frac{in^2}{ft}$ (required for strength), $d_s = 14.9$ in, $n := 8$, and transformed section analysis, gives a value of $j := 0.893$

$f_{range} = \frac{M_{range}}{A_s \cdot (j) \cdot d_s} = \frac{22.2 \cdot 12}{1.7 \cdot (0.893)\, 14.9}$ $\boxed{f_{range} = 11.78}$ ksi

$f_{range1.5} := 1.5 \cdot f_{range}$ $\boxed{f_{range1.5} = 17.67}$ ksi

$f_{min} = \frac{M_{DC} + M_{DW} + 1.5(-FatigueTruck)}{A_s \cdot (j) \cdot d_s}$

$f_{min} := \frac{[18.1 + 1.5 + 1.5 \cdot (-5.5)] \cdot 12}{1.7 \cdot (0.893)\, 14.9}$ $\boxed{f_{min} = 6.02}$ ksi

$R_r := 24 - 0.33 \cdot f_{min}$ $\boxed{R_r = 22.01}$ ksi

Therefore, $1.5 \cdot (f_{range})$ = 17.67 ksi < R_r = 22.01 ksi <u>O.K.</u>

E18-1.7.1.3 Check Crack Control

Check reinforcement using Service I Limit State and considerations and assumptions detailed in **LRFD [5.5.2, 5.7.1, 5.7.3.4]**

This criteria shall be checked when tension (f_T) in the cross-section exceeds 80% of the modulus of rupture (f_r), specified in **LRFD [5.4.2.6]**

$f_r = 0.24 \cdot \sqrt{f'_c}$ $\boxed{f_r = 0.48}$ ksi $f_{r80\%} := 0.8 \cdot f_r$ $\boxed{f_{r80\%} = 0.38}$ ksi

$$f_T = \frac{M_S \cdot (c)}{I_g}$$

$c := \frac{d_{slab}}{2}$ $\boxed{c = 8.5}$ in $I_g := \frac{1}{12} \cdot b \cdot d_{slab}^3$ $\boxed{I_g = 4913}$ in^4

Looking at E18-1.2: $\eta_i := 1.0$

and from Table E18.1: $\gamma_{DC.ser1} := 1.0$ $\gamma_{DW.ser1} := 1.0$ $\gamma_{LLser1} := 1.0$ $\phi_{ser1} := 1.0$

$Q_i = M_{DC}, M_{DW}, M_{LL+IM}$ **LRFD [3.6.1.2, 3.6.1.3.3]**; moments due to <u>applied loads</u> as stated in E18-1.2

$Q = M_S = \eta_i [\gamma_{DC.ser1} (M_{DC}) + \gamma_{DW.ser1} (M_{DW}) + \gamma_{LLser1}(M_{LL+IM})]$

$= 1.0 [1.0(M_{DC}) + 1.0(M_{DW}) + 1.0(M_{LL+IM})]$

Therefore, M_s becomes:

$M_s = 1.0(M_{DC}) + 1.0(M_{DW}) + 1.0(M_{LL+IM})$ (Factored Load Equation)

Using same moments selected from Table E18.4 for Strength Design in E18-1.7.1.1, at (0.4 pt.) of span 1, provides:

M_{DC} = 18.1 kip-ft M_{DW} = 1.5 kip-ft M_{LL+IM} = 7.9 + 37.5 = 45.4 kip-ft (LL#1)

$M_S := 1.0 \cdot (18.1) + 1.0 \cdot (1.5) + 1.0 \cdot (45.4)$ $\boxed{M_S = 65}$ kip-ft

$f_T = \frac{M_S \cdot (c)}{I_g}$ $f_T := \frac{65.0 \cdot (8.5) \cdot 12}{4913}$ $\boxed{f_T = 1.35}$ ksi

f_T = 1.35 ksi > 80% f_r = 0.38 ksi; therefore, check crack control criteria

Knowing $A_S = 1.7 \frac{in^2}{ft}$ (required for strength)

Try: #9 at 7" c-c spacing (A_S = 1.71 in^2/ft) from Table 18.4-4 in 18.4.13

The spacing (s) of reinforcement in the layer closest to the tension face shall satisfy:

$$s \le \frac{700 \cdot \gamma_e}{\beta_s \cdot f_{ss}} - 2 \cdot (d_c) \qquad \text{in which:} \qquad \beta_s = 1 + \frac{d_c}{0.7 \cdot (h - d_c)}$$

$\gamma_e := 1.00$ for Class 1 exposure condition (bottom reinforcement)

d_c = clr. cover + 1/2 bar dia.
= thickness of concrete cover measured from extreme tension fiber to center of the flexural reinforcement located closest thereto (in). See Figure E18.3

$d_c := 1.5 + \frac{1.128}{2}$ $\boxed{d_c = 2.064}$ in

h = overall depth of the section (in). See Figure E18.3

$h := d_{slab}$ $\boxed{h = 17}$ in

$\beta_s := 1 + \frac{d_c}{0.7 \cdot (h - d_c)}$ $\boxed{\beta_s = 1.2}$

f_{ss} = tensile stress in steel reinforcement at the Service I Limit State (ksi) $\le$ 0.6 f_y

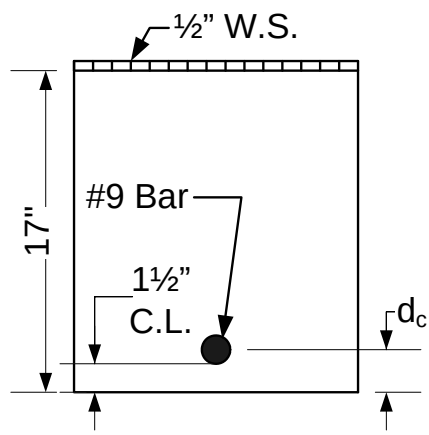

Figure E18.3

Cross Section - (0.4 pt.) Span 1

The moment arm used in the equation below to calculate f_{ss} is: (j) (h - d_c)
As shown in fatigue calculations in E18-1.7.1.2, j = 0.893

$$f_{ss} = \frac{M_s}{A_s \cdot (j) \cdot (h - d_c)} = \frac{65.0 \cdot (12)}{1.71 \cdot (0.893)(17 - 2.064)} \qquad \boxed{f_{ss} = 34.2} \text{ ksi} \quad \le 0.6\, f_y \text{ O.K.}$$

$$s \le \frac{700 \cdot (1.00)}{1.2 \cdot (34.2)} - 2 \cdot (2.064) = 17.0 - 4.1 = 12.9 \quad \text{in}$$

$s \le 12.9$ in

Therefore, spacing prov'd. = 7 in < 12.9 in O.K.

Use: #9 at 7" c-c spacing in span 1 (Max. positive reinforcement).

E18-1.7.1.4 Minimum Reinforcement Check

The amount of tensile reinforcement shall be adequate to develop a factored flexural resistance (M_r), or moment capacity, at least equal to the lesser of: **LRFD[5.7.3.3.2]**

M_{cr} (or) $1.33M_u$

$M_{cr} = \gamma_3(\gamma_1 \cdot f_r)S$ where: $S = \frac{I_g}{c}$ therefore, $M_{cr} = 1.1(f_r)\frac{I_g}{c}$

Where:

$\gamma_1 := 1.6$ flexural cracking variability factor

$\gamma_3 := 0.67$ ratio of yield strength to ultimate tensile strength of the reinforcement for A615, Grade 60 reinforcement

$f_r = 0.24\sqrt{f'_c}$ = modulus of rupture (ksi) **LRFD [5.4.2.6]**

$f_r = 0.24\sqrt{4}$ $\boxed{f_r = 0.48}$ ksi

$I_g := \frac{1}{12} \cdot b \cdot d_{slab}^3$ $\boxed{I_g = 4913}$ in^4 $c := \frac{d_{slab}}{2}$ $\boxed{c = 8.5}$ in

$M_{cr} = \frac{1.1 f_r \cdot (I_g)}{c} = \frac{1.1 \cdot 0.48 \cdot (4913)}{8.5(12)}$ $\boxed{M_{cr} = 25.43}$ kip-ft

$1.33 \cdot M_u = 138.75$ kip-ft , where M_u was calculated for Strength Design in E18-1.7.1.1 and (M_u = 104.3 kip-ft)

M_{cr} controls because it is less than 1.33 M_u

As shown in E18-1.7.1.1, the reinforcement yields, therefore:

$M_r = 0.90 \cdot A_s \cdot f_y \cdot \left(d_s - \frac{a}{2}\right)$ $\boxed{M_r = 105}$ kip-ft

Therefore, M_{cr} = 25.43 kip-ft < M_r = 105 kip-ft O.K.

E18-1.7.2 Negative Moment Reinforcement at Piers

Examine at C/L of Pier

E18-1.7.2.1 Design for Strength

Following the procedure in E18-1.7.1.1, using Strength I Limit State:

$$M_u = 1.25(M_{DC}) + 1.50(M_{DW}) + 1.75(M_{LL+IM}) \leq 0.90\, A_s\, f_s\, (d_s - a/2)$$

The negative live load moment shall be the largest caused by live loads (LL#1, LL#2 or LL#3). See Table E18.2 and E18.3 in E18-1.4 for description of live loads and dynamic load allowance (IM).

From Table E18.4, the largest live load moment is from (LL#2), therefore at (C/L of Pier):

M_{DC} = -59.2 kip-ft M_{DW} = -4.9 kip-ft M_{LL+IM} = -15.5 + (-39.9) = -55.4 kip-ft

$M_u := 1.25\cdot(-59.2) + 1.50\cdot(-4.9) + 1.75\cdot(-55.4)$ $\boxed{M_u = -178.3}$ kip-ft

$b := 12$ inches (for a one foot design width) and $\boxed{d_s = 25.4}$ in

The coefficient of resistance, R_u, the reinforcement ratio, ρ, and req'd. bar steel area, A_s, are:

$\boxed{R_u = 307.1}$ psi $\boxed{\rho = 0.0054}$ $\boxed{A_s = 1.65}$ $\frac{in^2}{ft}$

Try: #8 at 5 1/2" c-c spacing (A_s = 1.71 in^2/ft) from Table 18.4-4 in 18.4.13

Assume $f_s = f_y$, then the depth of the compressive stress block is: $\boxed{a = 2.51}$ in

Then, $\boxed{c = 2.96}$ in and $\frac{c}{d_s} = 0.12 < 0.6$ therefore, the reinforcement will yield.

The factored resistance is: $\boxed{M_r = 186.6}$ kip-ft

Therefore, M_u = 178.3 kip-ft < M_r = 186.6 kip-ft O.K.

E18-1.7.2.2 Check for Fatigue

Following the procedure in E18-1.7.1.2, using Fatigue I Limit State:

$$1.5\cdot(f_{range}) \leq 24 - 0.33\cdot f_{min} \qquad \text{(for } f_y = 60 \text{ ksi)}$$

From Table E18.4, the moments at (C/L Pier) are:

M_{DC} = -59.2 kip-ft M_{DW} = -4.9 kip-ft

+Fatigue Truck = 3.9 kip-ft -Fatigue Truck = -23.0 kip-ft

In regions of tensile stress due to permanent loads, fatigue criteria should be checked.

Allowable tensile stress for fatigue (cracking stress): $f_{tensile} = 0.19$ ksi

Calculate fatigue moment and then select section properties:

$M_{fatigue} = 1.0(M_{DC}) + 1.0(M_{DW}) + 1.5(\text{Fatigue Truck})$

$M_{fatigueMax} = -98.6$ kip-ft (tension) $M_{fatigueMin} = -58.3$ kip-ft (tension)

Calculate stress due to $M_{fatigue}$, where : $y = 14$ in $I_g = 21952$ in^4

$$f_{fatigue} = \frac{M_{fatigue} \cdot (y)}{I_g}$$

$f_{fatigueMax} = 0.75$ ksi (tension) > $f_{tensile}$ (0.190 ksi)

$f_{fatigueMin} = 0.45$ ksi (tension) > $f_{tensile}$ (0.190 ksi)

Values of $f_{fatigue}$ exceed $f_{tensile}$ during the fatigue cycle, therefore analyze fatigue using cracked section properties.

Looking at values of $M_{fatigue}$, shows that the reinforcement remains in tension throughout the fatigue cycle. Therefore:

M_{range} = (- Fatigue Truck) - (+Fatigue Truck) $M_{range} = -26.9$ kip-ft

The values for A_s, d_s, n and j (from transformed section) used to calculate f_{range} and f_{min} are:

$A_s = 1.65 \ \frac{in^2}{ft}$ (required for strength), $d_s = 25.4$ in , $n := 8$, $j := 0.915$

The values for f_{range}, $f_{range1.5}$, and f_{min} are:

$f_{range} = 8.42$ ksi $f_{range1.5} = 12.63$ ksi $f_{min} = 18.23$ ksi

The factored resistance is: $R_r = 17.98$ ksi

Therefore, $1.5 \cdot (f_{range}) = 12.63$ ksi < $R_r = 17.98$ ksi O.K.

E18-1.7.2.3 Check Crack Control

This criteria shall be checked when tension (f_T) in the cross-section exceeds 80% of the modulus of rupture (f_r), specified in **LRFD [5.4.2.6]**

Following the procedure in E18-1.7.1.3, using Service I Limit State:

$\boxed{f_r = 0.48}$ ksi $\boxed{f_{r80\%} = 0.38}$ ksi $\boxed{c = 14}$ in $\boxed{I_g = 21952}$ in^4

$M_s = 1.0(M_{DC}) + 1.0(M_{DW}) + 1.0(M_{LL+IM})$

Using same moments selected from Table E18.4 for Strength Design in E18-1.7.2.1, at (C/L of Pier), provides:

M_{DC} = -59.2 kip-ft M_{DW} = -4.9 kip-ft M_{LL+IM} = -15.5 + (-39.9) = -55.4 kip-ft (LL#2)

$M_S := 1.0\cdot(59.2) + 1.0\cdot(4.9) + 1.0\cdot(55.4)$ $\boxed{M_S = 119.5}$ kip-ft

$f_T = \dfrac{M_S\cdot c}{I_g}$ $f_T := \dfrac{119.5\cdot(14)\cdot 12}{21952}$ $\boxed{f_T = 0.91}$ ksi

f_T =0.91 ksi > 80% f_r = 0.38 ksi; therefore, check crack control criteria

Knowing $A_S = 1.65 \dfrac{in^2}{ft}$ (required for strength)

Try: #8 at 5 1/2" c-c spacing (A_S = 1.71 in^2/ft) from Table 18.4-4 in 18.4.13

The values for γ_e, d_c, h, and β_s, used to calculate max. spacing (s) of reinforcement are :

$\gamma_e := 0.75$ for Class 2 exposure condition (top reinforcement)

$\boxed{d_c = 2.5}$ in (See Figure E18.4) $\boxed{h = 28}$ in (See Figure E18.4) $\boxed{\beta_s = 1.14}$

f_{ss} = tensile stress in steel reinforcement at the Service I Limit State (ksi) $\leq$ 0.6 f_y

The moment arm used to calculate f_{ss} is: (j) (h - d_c)
As shown in fatigue calculations in E18-1.7.2.2, j = 0.915

The value of f_{ss} and (s) are:

$\boxed{f_{ss} = 35.94}$ ksi $\leq$ 0.6 f_y O.K. $s \leq \dfrac{700\cdot(0.75)}{1.14\cdot(35.94)} - 2\cdot(2.50) = 12.8 - 5.0 = 7.8$ in

$s \leq 7.8$ in

Therefore, spacing prov'd. = 5 1/2 in < 7.8 in <u>O.K.</u>

To insure that the reinforcement has the moment capacity to handle the Wisconsin Standard Permit Vehicle (Wis-SPV), the spacing was reduced to 5 inches. (See E18-1.8)

<u>Use: #8 at 5" c-c spacing at C/L Pier</u> (Max. negative reinforcement), $A_S = 1.88 \dfrac{in^2}{ft}$

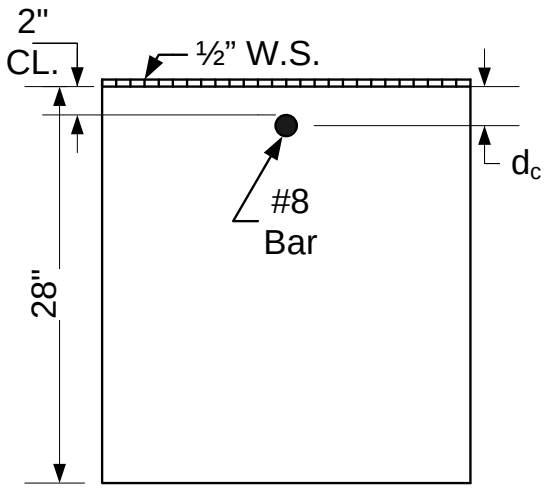

Figure E18.4

Cross Section - (at C/L of Pier)

E18-1.7.2.4 Minimum Reinforcement Check

The amount of tensile reinforcement shall be adequate to develop a factored flexural resistance (M_r), or moment capacity, at least equal to the lesser of: **LRFD [5.7.3.3.2]**

M_{cr} (or) $1.33M_u$

from E18-1.7.1.4, $M_{cr} = 1.1(f_r)\frac{I_g}{c}$

Where:

$f_r = 0.24\sqrt{f'_c}$ = modulus of rupture (ksi) **LRFD [5.4.2.6]**

$f_r = 0.24\sqrt{4}$ $\boxed{f_r = 0.48}$ ksi

$I_g := \frac{1}{12}\cdot b\cdot D_{haunch}^3$ $\boxed{I_g = 21952}$ in^4 $c := \frac{D_{haunch}}{2}$ $\boxed{c = 14}$ in

$M_{cr} = \frac{1.1 f_r\cdot(I_g)}{c} = \frac{1.1\cdot 0.48\cdot(21952)}{14(12)}$ $\boxed{M_{cr} = 68.99}$ kip-ft

$1.33\cdot M_u = 237.1$ kip-ft , where M_u was calculated for Strength Design in E18-1.7.2.1 and (M_u = 178.3 kip-ft)

M_{cr} controls because it is less than 1.33 M_u

By examining E18-1.7.2.1, the reinforcement yields, therefore:

$$M_r = 0.90 \cdot A_s \cdot f_y \cdot \left(d_s - \frac{a}{2}\right) \qquad \boxed{M_r = 204.1} \text{ kip-ft}$$

Therefore, M_{cr} = 68.99 kip-ft < M_r = 204.1 kip-ft O.K.

E18-1.7.3 Positive Moment Reinforcement for Span 2

Examine the 0.5 point of span 2

E18-1.7.3.1 Design for Strength

Following the procedure in E18-1.7.1.1, using Strength I Limit State:

$$M_u = 1.25(M_{DC}) + 1.50(M_{DW}) + 1.75(M_{LL+IM}) \leq 0.90\, A_s\, f_s\, (d_s - a/2)$$

The positive live load moment shall be the largest caused by live loads (LL#1 or LL#2).
See Table E18.2 and E18.3 in E18-1.4 for description of live loads and dynamic load allowance (IM).

From Table E18.4, the largest live load moment is from (LL#1), therefore at (0.5 pt.) of span 2:

M_{DC} = 19.6 kip-ft M_{DW} = 1.6 kip-ft M_{LL+IM} = 8.2 + 37.4 = 45.6 kip-ft

$$M_u := 1.25 \cdot (19.6) + 1.50 \cdot (1.6) + 1.75 \cdot (45.6) \qquad \boxed{M_u = 106.7} \text{ kip-ft}$$

$b := 12$ inches (for a one foot design width) and $\boxed{d_s = 14.9}$ in

The coefficient of resistance, R_u, the reinforcement ratio, ρ, and req'd. bar steel area, A_s, are:

$\boxed{R_u = 534}$ psi $\boxed{\rho = 0.0097}$ $\boxed{A_s = 1.73}$ $\frac{in^2}{ft}$

Try: #9 at 6" c-c spacing (A_s = 2.00 in^2/ft) from Table 18.4-4 in 18.4.13

Assume $f_s = f_y$, then the depth of the compressive stress block is: $\boxed{a = 2.94}$ in

Then, $\boxed{c = 3.46}$ in and $\frac{c}{d_s} = 0.23 < 0.6$ therefore, the reinforcement will yield.

The factored resistance is: $\boxed{M_r = 120.9}$ kip-ft

Therefore, M_u = 106.7 kip-ft < M_r = 120.9 kip-ft O.K.

E18-1.7.3.2 Check for Fatigue

Following the procedure in E18-1.7.1.2, using Fatigue I Limit State:

$1.5 \cdot (f_{range}) \leq 24 - 0.33 \cdot f_{min}$ (for f_y = 60 ksi)

From Table E18.4, the moments at (0.5 pt.) of span 2 are:

M_{DC} = 19.6 kip-ft M_{DW} = 1.6 kip-ft

+Fatigue Truck = 16.7 kip-ft -Fatigue Truck = -3.4 kip-ft

In regions of tensile stress due to permanent loads, fatigue criteria should be checked.

Allowable tensile stress for fatigue (cracking stress): $\boxed{f_{tensile} = 0.19}$ ksi

Calculate fatigue moment and then select section properties:

$M_{fatigue}$ = 1.0(M_{DC}) + 1.0(M_{DW}) +1.5(Fatigue Truck)

$\boxed{M_{fatigueMax} = 46.25}$ kip-ft (tension) $\boxed{M_{fatigueMin} = 16.1}$ kip-ft (tension)

Calculate stress due to $M_{fatigue}$, where $\boxed{y = 8.5}$ in $\boxed{I_g = 4913}$ in^4

:

$$f_{fatigue} = \frac{M_{fatigue} \cdot (y)}{I_g}$$

$\boxed{f_{fatigueMax} = 0.96}$ ksi (tension) > $f_{tensile}$ (0.190 ksi)

$\boxed{f_{fatigueMin} = 0.33}$ ksi (tension) > $f_{tensile}$ (0.190 ksi)

Values of $f_{fatigue}$ exceed $f_{tensile}$ during the fatigue cycle, therefore analyze fatigue using cracked section properties.

Looking at values of $M_{fatigue}$, shows that the reinforcement remains in tension throughout the fatigue cycle. Therefore:

M_{range} = (+ Fatigue Truck) - (-Fatigue Truck) $\boxed{M_{range} = 20.1}$ kip-ft

The values for A_s, d_s, n and j (from transformed section) used to calculate f_{range} and f_{min} are:

$A_s = 1.73 \ \frac{in^2}{ft}$ (required for strength), $d_s = 14.9$ in, $n := 8$, $j := 0.892$

The values for f_{range}, $f_{range1.5}$, and f_{min} are:

$\boxed{f_{range} = 10.43}$ ksi $\boxed{f_{range1.5} = 15.64}$ ksi $\boxed{f_{min} = 8.4}$ ksi

The factored resistance is: $\boxed{R_r = 21.23}$ ksi

Therefore, $1.5 \cdot (f_{range})$ = 15.64 ksi < R_r = 21.23 ksi <u>O.K.</u>

E18-1.7.3.3 Check Crack Control

This criteria shall be checked when tension (f_T) in the cross-section exceeds 80% of the modulus of rupture (f_r), specified in **LRFD [5.4.2.6]**

Following the procedure in E18-1.7.1.3, using Service I Limit State:

$f_r = 0.48$ ksi $f_{r80\%} = 0.38$ ksi $c = 8.5$ in $I_g = 4913$ in^4

$M_s = 1.0(M_{DC}) + 1.0(M_{DW}) + 1.0(M_{LL+IM})$

Using same moments selected from Table E18.4 for Strength Design in E18-1.7.3.1, at (0.5 pt.) of span 2 provides:

M_{DC} = 19.6 kip-ft M_{DW} = 1.6 kip-ft M_{LL+IM} = 8.2 + 37.4 = 45.6 kip-ft (LL#1)

$M_S := 1.0\cdot(19.6) + 1.0\cdot(1.6) + 1.0\cdot(45.6)$ $M_S = 66.8$ kip-ft

$$f_T = \frac{M_S\cdot c}{I_g} \qquad f_T := \frac{66.8\cdot(8.5)\cdot 12}{4913} \qquad f_T = 1.39 \text{ ksi}$$

f_T =1.39 ksi > 80% f_r = 0.38 ksi; therefore, check crack control criteria

Knowing $A_S = 1.73 \dfrac{in^2}{ft}$ (required for strength)

Try: #9 at 6" c-c spacing (A_S = 2.00 in^2/ft) from Table 18.4-4 in 18.4.13

The values for γ_e, d_c, h, and β_s, used to calculate max. spacing (s) of reinforcement are :

$\gamma_e := 1.00$ for Class 1 exposure condition (bottom reinforcement)

$d_c = 2.064$ in (See Figure E18.5) $h = 17$ in (See Figure E18.5) $\beta_s = 1.2$

f_{ss} = tensile stress in steel reinforcement at the Service I Limit State (ksi) $\leq$ 0.6 f_y

The moment arm used to calculate f_{ss} is: (j) (h - d_c)
As shown in fatigue calculations in E18-1.7.3.2, j = 0.892

The value of f_{ss} and (s) are:

$f_{ss} = 30.08$ ksi $\leq$ 0.6 f_y O.K. $s \leq \dfrac{700\cdot(1.00)}{1.2\cdot(30.08)} - 2\cdot(2.064) = 19.4 - 4.1 = 15.3$ in

$s \leq 15.3$ in

Therefore, spacing prov'd. = 6 in < 15.3 in <u>O.K.</u>

Use: #9 at 6" c-c spacing in span 2 (Max. positive reinforcement).

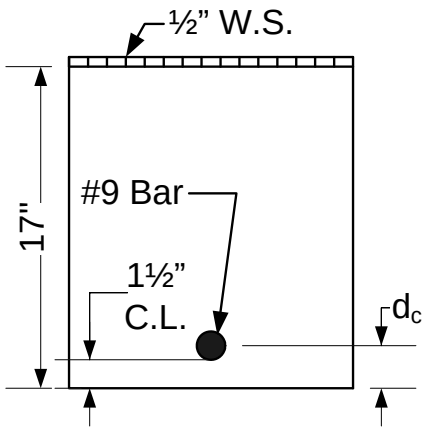

Figure E18.5

Cross Section - (0.5 pt.) Span 2

E18-1.7.3.4 Minimum Reinforcement Check

Following the procedure in E18-1.7.1.4, the minimum reinforcement check was found to be O.K.

E18-1.7.4 Negative Moment Reinforcement at Haunch/Slab Intercepts

Check the longitudinal reinforcement required at the C/L of the pier, to see if its adequate at the haunch/slab intercepts.

The haunch/slab intercepts are at (0.789 pt.) of span 1 and (0.157/0.843 pt.) of span 2. Moments at these locations are shown in Table E18.4.

Check #8 at 5" c-c spacing (as req'd. at Pier); $A_s := 1.88 \frac{in^2}{ft}$

Check for Strength:

Following the procedure in E18-1.7.1.1, using Strength I Limit State O.K.

Check for Fatigue:

Following the procedure in E18-1.7.1.2, using Fatigue I Limit State O.K.

Check Crack Control:

Following the procedure in E18-1.7.1.3, using Service I Limit State O.K.

Minimum Reinforcement Check:

Following the procedure in E18-1.7.1.4 O.K.

E18-1.7.5 Bar Steel Cutoffs

Select longitudinal reinforcement cutoff locations for an Interior Strip.

E18-1.7.5.1 Span 1 Positive Moment Reinforcement (Cutoffs)

Theoretical bar steel cutoff points for positive moment are determined when one-half the steel required at the (0.4 pt.) has the moment capacity, or factored resistance , M_r , equal to the total factored moment , M_u , at these points. However, the remaining bars are to be extended beyond the theoretical cutoff point and must meet the fatigue and crack control requirements at these cutoff locations. The factored moments, M_u , at the 0.1 points and haunch/slab intercepts have been plotted on Figure E18.6. The capacities, M_r , of #9 at 7" and #9 at 14" are also shown. The factored moments, M_u , and capacities, M_r , are based on Strength I Limit State criteria. The positive live load moments, M_{LL+IM} , used to calculate M_u are taken as the largest caused by live loads (LL#1 or LL#2). See Table E18.2 and E18.3 in E18-1.4 for description of live loads and dynamic load allowance (IM). Use maximum or minimum load factors for M_{DC} and M_{DW} (See Table E18.1) to calculate the critical force effect. When value of M_{DW} is (-), assume FWS is not present and ignore it.

Calculate the capacity of #9 at 7" c-c spacing $A_s := 1.71 \frac{in^2}{ft}$ $d_s := 14.9$ in

$b = 12$ inches (for a one foot design width)

As shown in E18-1.7.1.1, reinforcement will yield, therefore: $\boxed{a = 2.51}$ in

$$M_r := 0.9 \cdot (1.71) \cdot 60.0 \cdot \left(\frac{14.9 - \frac{2.51}{2}}{12} \right)$$

$\boxed{M_r = 105}$ kip-ft

Calculate the capacity of #9 at 14" c-c spacing $A_s := 0.86 \frac{in^2}{ft}$ $d_s := 14.9$ in

For same section depth and less steel, reinforcement will yield, therefore: $\boxed{a = 1.26}$ in

$$M_r := 0.9 \cdot (0.86) \cdot 60.0 \cdot \left(\frac{14.9 - \frac{1.26}{2}}{12} \right)$$

$\boxed{M_r = 55.2}$ kip-ft

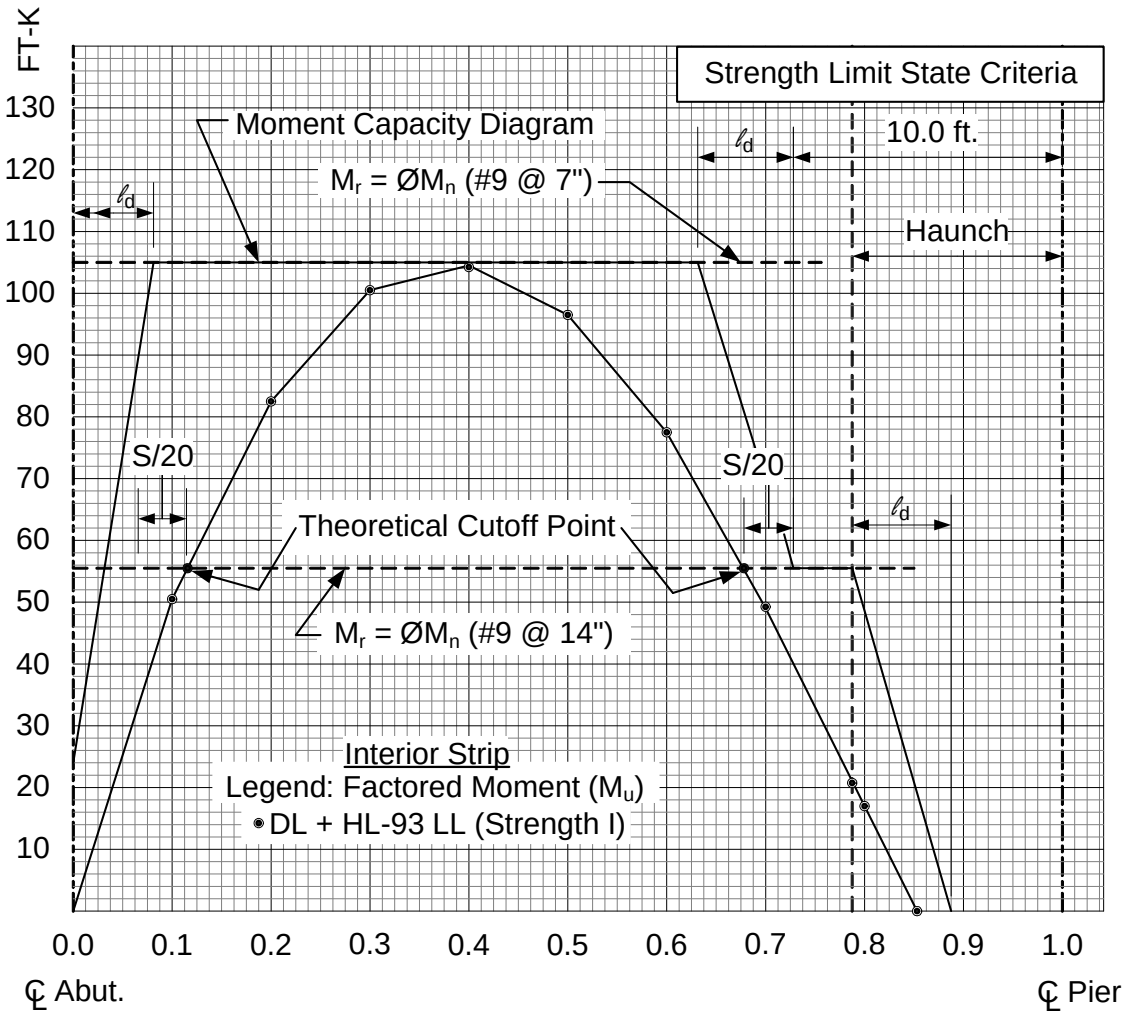

Figure E18.6

Span (1) - Positive Moment Cutoff Diagram

The moment diagram equals the capacity of #9 at 14" at 4.2 (ft) from the C/L of the abutment. Reinforcement shall be extended beyond this point a distance equal to the effective depth of the slab, 15 bar diameters, or 1/20 of the clear span, whichever is greater. **LRFD [5.11.1.2.1]**

$d_{eff} := 14.9$ in ℓ_d (#9) (See Table 9.9-2, Chapter 9).

$15 \cdot (d_b) = 15 \cdot (1.128) = 16.9$ in

$\frac{S}{20} = \frac{38}{20} = 1.9$ ft <u>controls</u>

Therefore, 1/2 of bars may be cut at 2.0 (ft) from the C/L of the abutment if fatigue and crack control criteria are satisfied.

Because the cutoff point is close to the abutment, don't cut 1/2 of bars, but run all #9 bars into the support. **LRFD [5.11.1.2.2]**

The moment diagram equals the capacity of #9 at 14" at 12.1 (ft) from the C/L of pier. Reinforcement shall be extended S/20 beyond this point.

Therefore, 1/2 of bars may be cut at 10.0 (ft) from the C/L of pier if fatigue and crack control criteria are satisfied. (Check at 0.74 pt.)

E18-1.7.5.1.1 Fatigue Check (at Cutoff) - (0.74 Pt.)

Following the procedure in E18-1.7.1.2, using Fatigue I Limit State:

$1.5 \cdot (f_{range}) \leq 24 - 0.33 \cdot f_{min}$ (for f_y = 60 ksi)

Interpolating from Table E18.4, the moments at (0.74 pt.) of span 1 are:

M_{DC} = -10.0 kip-ft M_{DW} = -0.89 kip-ft

+Fatigue Truck = 9.72 kip-ft -Fatigue Truck = -10.34 kip-ft

In regions of compressive stress due to permanent loads, fatigue shall be considered only if this compressive stress is less than ($\gamma_{LLfatigue}$ = 1.5) times the maximum tensile stress from the fatigue load. **LRFD [5.5.3.1]**

For simplicity, assume fatigue criteria should be checked.

Calculate fatigue moment: $M_{fatigue} = 1.0(M_{DC}) + 1.0(M_{DW}) + 1.5(\text{Fatigue Truck})$

$M_{fatigueMax} := 1.0 \cdot (-10.0) + 1.0(-0.89) + 1.5(9.72)$ $\boxed{M_{fatigueMax} = 3.69}$ kip-ft (tens.)

$M_{fatigueMin} := 1.0 \cdot (-10.0) + 1.0(-0.89) + 1.5(-10.34)$ $\boxed{M_{fatigueMin} = -26.4}$ kip-ft (compr.)

Looking at values of $M_{fatigue}$ shows that the reinforcement goes through tensile and compressive stress during the fatigue cycle.

Following the procedure outlined in E18-1.7.5.2.1, fatigue criteria at bar cutoff is O.K.

E18-1.7.5.1.2 Crack Control Check (at Cutoff) - (0.74 Pt.)

This criteria shall be checked when tension (f_T) in the cross-section exceeds 80% of the modulus of rupture (f_r), specified in **LRFD [5.4.2.6]**

Following the procedure in E18-1.7.1.3, using Service I Limit State:

$f_r = 0.48$ ksi $f_{r80\%} = 0.38$ ksi $c = 8.5$ in $I_g = 4913$ in^4

$M_s = 1.0(M_{DC}) + 1.0(M_{DW}) + 1.0(M_{LL+IM})$

Interpolating from Table E18.4, the moments at (0.74 pt.) of span 1 are:

M_{DC} = -10.0 kip-ft M_{DW} = -0.89 kip-ft M_{LL+IM} = 4.7 + 21.1 = 25.8 kip-ft (LL#1)

$M_S := 1.0 \cdot (-10.0) + 1.0 \cdot (25.8)$ $M_S = 15.8$ kip-ft

M_{DW} (FWS) moment was ignored in order to obtain a greater tensile moment

$$f_T = \frac{M_S \cdot c}{I_g} \qquad f_T := \frac{15.8 \cdot (8.5) \cdot 12}{4913} \qquad f_T = 0.33 \text{ ksi}$$

f_T =0.33 ksi < 80% f_r = 0.38 ksi; therefore, crack control criteria check not req'd.

Therefore, crack control criteria at bar cutoff is O.K.

E18-1.7.5.1.3 Minimum Reinforcement Check

Following the procedure in E18-1.7.1.4, the minimum reinforcement check was found to be O.K.

Therefore cut 1/2 of bars at 10.0 (ft) from the C/L of pier. Remaining bars are extended (ℓ_d) beyond the haunch/slab intercept as shown on Standard 18.01.

E18-1.7.5.2 Span 2 Positive Moment Reinforcement (Cutoffs)

Theoretical bar steel cutoff points for positive moment are determined when one-half the steel required at the (0.5 pt.) has the moment capacity, or factored resistance , M_r , equal to the total factored moment , M_u , at these points. However, the remaining bars are to be extended

beyond the theoretical cutoff point and must meet the fatigue and crack control requirements at these cutoff locations. The factored moments, M_u, at the 0.1 points and haunch/slab intercepts have been plotted on Figure E18.7. The capacities, M_r, of #9 at 6" and #9 at 12" are also shown. The factored moments, M_u, and capacities, M_r, are based on Strength I Limit State criteria. The positive live load moments, M_{LL+IM}, used to calculate M_u are taken as the largest caused by live loads (LL#1 or LL#2). See Table E18.2 and E18.3 in E18-1.4 for description of live loads and dynamic load allowance (IM). Use maximum or minimum load factors for M_{DC} and M_{DW} (See Table E18.1) to calculate the critical force effect. When value of M_{DW} is (-), assume FWS is not present and ignore it.

Calculate the capacity of #9 at 6" c-c spacing $A_s := 2.00 \frac{in^2}{ft}$ $d_s := 14.9$ in

$b = 12$ inches (for a one foot design width)

As shown in E18-1.7.3.1, reinforcement will yield, therefore: $\boxed{a = 2.94}$ in

$$M_r := 0.9 \cdot (2.00) \cdot 60.0 \cdot \left(\frac{14.9 - \frac{2.94}{2}}{12} \right) \qquad \boxed{M_r = 120.9} \text{ kip-ft}$$

Calculate the capacity of #9 at 12" c-c spacing $A_s := 1.00 \frac{in^2}{ft}$ $d_s := 14.9$ in

For same section depth and less steel, reinforcement will yield, therefore: $\boxed{a = 1.47}$ in

$$M_r := 0.9 \cdot (1.00) \cdot 60.0 \cdot \left(\frac{14.9 - \frac{1.47}{2}}{12} \right) \qquad \boxed{M_r = 63.7} \text{ kip-ft}$$

The moment diagram equals the capacity of #9 at 12" at 14.4 (ft) from the C/L of pier. Reinforcement shall be extended beyond this point a distance equal to the effective depth of the slab, 15 bar diameters, or 1/20 of the clear span, whichever is greater. **LRFD [5.11.1.2.1]**

$\frac{S}{20} = \frac{51}{20} = 2.55$ ft <u>controls</u> ℓ_d (#9) (See Table 9.9-2, Chapter 9).

Therefore, 1/2 of bars may be cut at 11.5 (ft) from the C/L of each pier if fatigue and crack control criteria are satisfied (Check at 0.23 pt.).

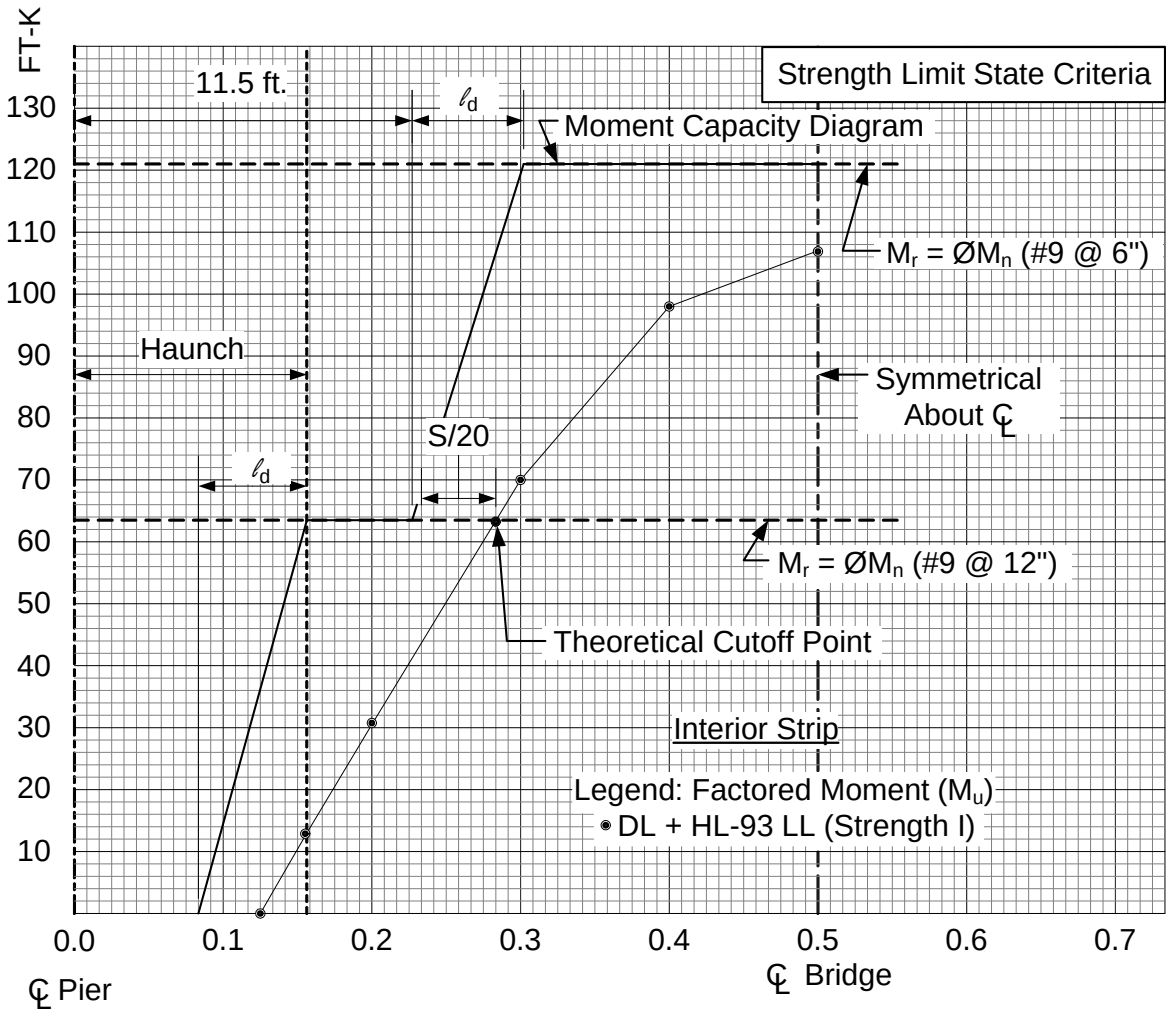

Figure E18.7

Span (2) - Positive Moment Cutoff Diagram

E18-1.7.5.2.1 Fatigue Check (at Cutoff) - (0.23 Pt.)

Looking at E18-1.2: $\eta_i := 1.0$ and from Table E18.1: $\gamma_{LLfatigue} := 1.5$ $\phi_{fatigue} := 1.0$

When reinforcement goes through tensile and compressive stress during the fatigue cycle,

$Q = f_s + f'_s$

Where:

f_s = tensile part of stress range in bar reinforcement due to dead load moments from applied loads in E18-1.2 and largest factored tensile moment caused by Fatigue Truck (LL#4)

f'_s = compressive part of stress range in bar reinforcement due to dead load moments from applied loads in E18-1.2 and largest factored compressive moment caused by Fatigue Truck (LL#4)

All live load moments in f_s and f'_s are multiplied by (η_i) and ($\gamma_{LLfatigue}$)

See Table E18.2 and E18.3 in E18-1.4 for description of live load and dynamic load allowance (IM).

$R_n = (\Delta F_{TH}) = 24 - 0.33 \cdot f_{min}$ (for f_y = 60 ksi) (See 18.3.5.2.1)

$R_r = \phi_{fatigue} \cdot R_n = 1.0 \cdot (24 - 0.33 \cdot f_{min})$

Therefore: $f_s + f'_s \le 24 - 0.33 \cdot f_{min}$ (Limit States Equation)

Interpolating from Table E2, the moments at (0.23 pt.) of span 2 are:

M_{DC} = -3.5 kip-ft M_{DW} = -0.31 kip-ft

+Fatigue Truck = 10.02 kip-ft -Fatigue Truck = -7.3 kip-ft

In regions of compressive stress due to permanent loads, fatigue shall be considered only if this compressive stress is less than ($\gamma_{LLfatigue}$ = 1.5) times the maximum tensile stress from the fatigue load. **LRFD [5.5.3.1]**

The section properties for fatigue shall be based on cracked sections where the sum of stresses, due to permanent loads, and ($\gamma_{LLfatigue}$ = 1.5) times the fatigue load is tensile and exceeds $0.095\sqrt{f'_c}$.

For simplicity, assume fatigue criteria should be checked and use cracked section properties.

Calculate fatigue moment: $M_{fatigue} = 1.0(M_{DC}) + 1.0(M_{DW}) + 1.5(\text{Fatigue Truck})$

$M_{fatigueMax} := 1.0(-3.5) + 1.5(10.02)$ $\boxed{M_{fatigueMax} = 11.53}$ kip-ft (tension)

$M_{fatigueMin} := 1.0(-3.5) + 1.5(-7.3)$ $\boxed{M_{fatigueMin} = -14.45}$ kip-ft (compression)

M_{DW} (FWS) moment was ignored in order to obtain a greater tensile range.

Looking at values of $M_{fatigue}$, shows that the reinforcement goes through tensile and compressive stress during the fatigue cycle

See Figure E18.8, for definition of d_1, d_2, d', A_s and A'_s.

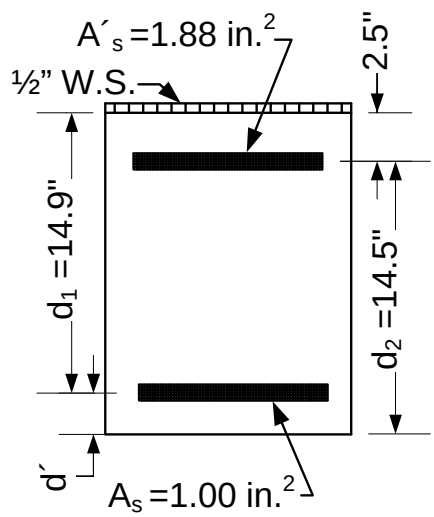

Figure E18.8

Cross Section - (0.23 pt.) Span 2

The moment arm used in equations below is: (j_1) (d_1) for finding f_s
(j_2) (d_2) for finding f'_s

Using: A_s = 1.00 in²/ft, d_1 = 14.9 in, n = 8, and transformed section analysis, gives a value of j_1 = 0.914

Using: A'_s = 1.88 in²/ft, d_2 = 14.5 in, n = 8, and transformed section analysis, gives a value of j_2 = 0.887; k = x/d_2 = 0.34, where x = distance from compression face to neutral axis

The tensile part of the stress range in the bottom bars is computed as:

$$f_s := \frac{M_{fatigueMax} \cdot 12}{A_s \cdot (j_1) \cdot d_1}$$ $\boxed{f_s = 10.16}$ ksi (tension)

The compressive part of the stress range in the bottom bars is computed as:

$$f'_s := \frac{M_{fatigueMin} \cdot 12}{A'_s \cdot (j_2) \cdot d_2} \cdot \frac{k - \left(\frac{d'}{d_2}\right)}{1 - k}$$ $\boxed{f'_s = -2.15}$ ksi (compression)

It is assumed (#8's at 5") req'd. at pier, is present at this location as compression steel (A'_s).

Therefore, total stress range on bottom steel:

$f_s + f'_s = 10.16 - (-2.15) = 12.31$ ksi

$R_r := 24 - 0.33 \cdot f_{min}$ where $f_{min} = f'_s$, therefore: $R_r = 24.71$ ksi

Therefore, $f_s + f'_s = 12.31$ ksi < $R_r = 24.71$ ksi O.K..

E18-1.7.5.2.2 Crack Control Check (at Cutoff) - (0.23 Pt.)

This criteria shall be checked when tension (f_T) in the cross-section exceeds 80% of the modulus of rupture (f_r), specified in **LRFD [5.4.2.6]**.

Following the procedure in E18-1.7.1.3, using Service I Limit State:

$f_r = 0.48$ ksi $f_{r80\%} = 0.38$ ksi $c = 8.5$ in $I_g = 4913$ in^4

$M_s = 1.0(M_{DC}) + 1.0(M_{DW}) + 1.0(M_{LL+IM})$

Interpolating from Table E18.4, the moments at (0.23 pt.) of span 2 are:

$M_{DC} = -3.51$ kip-ft $M_{DW} = -0.31$ kip-ft $M_{LL+IM} = 3.7 + (21.9) = 25.6$ kip-ft (LL#1)

$M_s := 1.0 \cdot (-3.51) + 1.0 \cdot (25.6)$ $M_s = 22.1$ kip-ft

M_{DW} (FWS) moment was ignored in order to obtain a greater tensile moment.

$$f_T = \frac{M_s \cdot c}{I_g} \qquad f_T := \frac{22.1 \cdot (8.5) \cdot 12}{4913} \qquad f_T = 0.46 \text{ ksi}$$

$f_T = 0.46$ ksi > 80% $f_r = 0.38$ ksi; therefore, check crack control criteria

For: #9 at 12" c-c spacing ($A_s = 1.00$ in^2/ft)

The values for γ_e, d_c, h, and β_s, used to calculate max. spacing (s) of reinforcement are :

$\gamma_e := 1.00$ for Class 1 exposure condition (bottom reinforcement)

$d_c = 2.064$ in $h = 17$ in $\beta_s = 1.2$

f_{ss} = tensile stress in steel reinforcement at the Service I Limit State (ksi) $\leq 0.6\ f_y$

The moment arm used to calculate f_{ss} is: (j) (h - d_c)

As shown in fatigue calculations in E18-1.7.5.2.1, j = 0.914

The value of f_{SS} and (s) are:

$\boxed{f_{SS} = 19.43}$ ksi $\leq 0.6\ f_y$ O.K. $\quad s \leq \frac{700 \cdot (1.00)}{1.2 \cdot (19.43)} - 2 \cdot (2.064) = 30.07 - 4.1 = 26.0$ in

$s \leq 26.0$ in

Therefore, spacing prov'd. = 12 in < 26.0 in O.K.

E18-1.7.5.2.3 Minimum Reinforcement Check

Following the procedure in E18-1.7.1.4, the minimum reinforcement check was found to be O.K.

Therefore, cut 1/2 of bars at 11.5 (ft) from the C/L of each pier. Remaining bars are extended (ℓ_d) beyond the haunch/slab intercept as shown on Standard 18.01.

E18-1.7.5.3 Span 1 Negative Moment Reinforcement (Cutoffs)

Theoretical bar steel cutoff points for negative moment are determined when one-half the steel required at the (C/L Pier) has the moment capacity, or factored resistance , M_r , equal to the total factored moment , M_u , at these points. However, the remaining bars are to be extended beyond the theoretical cutoff point and must meet the fatigue and crack control requirements at these cutoff locations. The factored moments, M_u , at the 0.1 points and haunch/slab intercepts have been plotted on Figure E18.9. The capacities, M_r , of #8 at 5" and #8 at 10" are also shown. The factored moments, M_u , and capacities, M_r , are based on Strength I Limit State criteria. The negative live load moments, M_{LL+IM} , used to calculate M_u are taken as the largest caused by live loads (LL#1, LL#2 or LL#3). See Table E18.2 and E18.3 in E18-1.4 for description of live loads and dynamic load allowance (IM). Use maximum or minimum load factors for M_{DC} and M_{DW} (See Table E18.1) to calculate the critical force effect. When value of M_{DW} is (+), assume FWS is not present and ignore it.

Calculate the capacity of #8 at 5" c-c spacing $\quad A_s := 1.88 \frac{in^2}{ft}$

$b = 12$ inches (for a one foot design width)

As shown in E18-1.7.2.1, reinforcement will yield, therefore: $\boxed{a = 2.76}$ in

$M_r = 204.1$ kip-ft (at C/L pier), $\quad d_s := 25.5$ in

$M_r = 111.0$ kip-ft (in span), $\quad d_s := 14.5$ in

Calculate the capacity of #8 at 10" c-c spacing $\quad A_s := 0.94 \frac{in^2}{ft}$

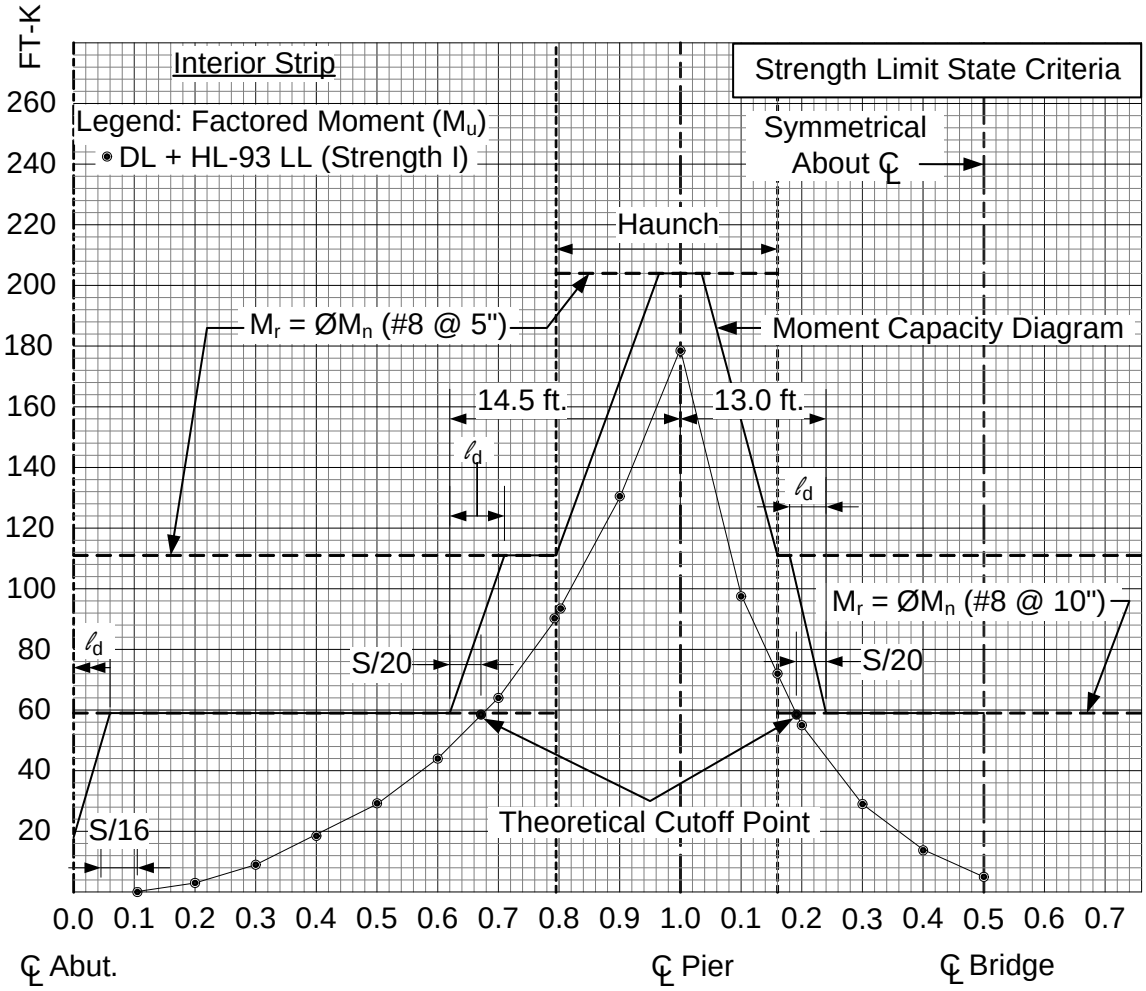

Figure E18.9

Negative Moment Cutoff Diagram

For same section depth and less steel, reinforcement will yield, therefore:

$\boxed{a = 1.38}$ in

M_r = 104.9 kip-ft (at C/L pier), $d_s := 25.5$ in

M_r = 58.4 kip-ft (in span), $d_s := 14.5$ in

The moment diagram equals the capacity of #8 at 10" at 12.5 (ft) from the C/L of pier. Reinforcement shall be extended beyond this point a distance equal to the effective depth of the slab, 15 bar diameters, or 1/20 of the clear span, whichever is greater. **LRFD [5.11.1.2.1]**

$\frac{S}{20} = \frac{38}{20} = 1.9$ ft <u>controls</u> ℓ_d (#8) (See Table 9.9-2, Chapter 9)

Therefore, 1/2 of bars may be cut at 14.5 (ft) from the C/L of pier if fatigue and crack control criteria are satisfied. (Check at 0.62 pt.)

E18-1.7.5.3.1 Fatigue Check (at Cutoff) - (0.62 Pt.)

Following the procedure in E18-1.7.5.2.1, using Fatigue I Limit State:

$f_s + f'_s \le 24 - 0.33 \cdot f_{min}$ (for f_y = 60 ksi)

Interpolating from Table E18.4, the moments at (0.62 pt.) of span 1 are:

M_{DC} = 4.44 kip-ft M_{DW} = 0.4 kip-ft

+Fatigue Truck = 13.7 kip-ft -Fatigue Truck = -8.68 kip-ft

For simplicity, assume fatigue criteria should be checked and use cracked section properties.

Calculate fatigue moment: $M_{fatigue} = 1.0(M_{DC}) + 1.0(M_{DW}) + 1.5(\text{Fatigue Truck})$

$M_{fatigueMax} := 1.0(4.44) + 1.5(-8.68)$ $\boxed{M_{fatigueMax} = -8.58}$ kip-ft (tension)

$M_{fatigueMin} := 1.0(4.44) + 1.5(13.7)$ $\boxed{M_{fatigueMin} = 24.99}$ kip-ft (compression)

M_{DW} (FWS) moment was ignored in order to obtain a greater tensile range.

Looking at values of $M_{fatigue}$, shows that the reinforcement goes through tensile and compressive stress during the fatigue cycle

See Figure E18.10, for definition of d_1, d_2, d', A_s and A'_s.

The moment arm used in equations below is: (j_1) (d_1) for finding f_s
(j_2) (d_2) for finding f'_s

Using: A_s = 0.94 in^2/ft, d_1 = 14.5 in, n = 8, and transformed section analysis, gives a value of j_1 = 0.915

Using: A'_s =1.71 in^2/ft, d_2 = 14.9 in, n = 8, and transformed section analysis, gives a value of j_2 = 0.893; k = x/d_2 = 0.33, where x = distance from compression face to neutral axis

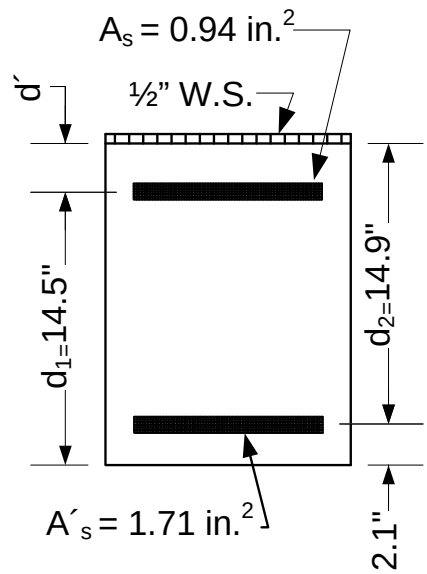

Figure E18.10

Cross Section - (0.62 pt.) Span 1

The tensile part of the stress range in the top bars is computed as:

$$f_s := \frac{M_{fatigueMax} \cdot 12}{A_s \cdot (j_1) \cdot d_1}$$

$f_s = 8.26$ ksi (tension)

The compressive part of the stress range in the top bars is computed as:

$$f'_s := \frac{M_{fatigueMin} \cdot 12}{A'_s \cdot (j_2) \cdot d_2} \cdot \frac{k - \left(\frac{d'}{d_2}\right)}{1 - k}$$

$f'_s = -3.19$ ksi (compression)

It is assumed (#9's at 7") is present at this location as compression steel (A'_s).

Therefore, total stress range on top steel:

$f_s + f'_s$ = 8.26 – (–3.19) = 11.45 ksi

$R_r := 24 - 0.33 \cdot f_{min}$ where $f_{min} = f'_s$, therefore: $R_r = 25.05$ ksi

Therefore, $f_s + f'_s$ = 11.45 ksi < R_r = 25.05 ksi O.K..

E18-1.7.5.3.2 Crack Control Check (at Cutoff) - (0.62 Pt.)

This criteria shall be checked when tension (f_T) in the cross-section exceeds 80% of the modulus of rupture (f_r), specified in **LRFD [5.4.2.6]**.

Following the procedure in E18-1.7.1.3, using Service I Limit State:

$\boxed{f_r = 0.48}$ ksi $\boxed{f_{r80\%} = 0.38}$ ksi $\boxed{c = 8.5}$ in $\boxed{I_g = 4913}$ in^4

$M_s = 1.0(M_{DC}) + 1.0(M_{DW}) + 1.0(M_{LL+IM})$

Interpolating from Table E18.4, the moments at (0.62 pt.) of span 1 are:

M_{DC} = 4.4 kip-ft M_{DW} = 0.4 kip-ft M_{LL+IM} = -5.88 + (-23.88) = -29.8 kip-ft (LL#2)

$M_S := 1.0\cdot(4.4) + 1.0\cdot(-29.8)$ $\boxed{M_S = -25.4}$ kip-ft

M_{DW} (FWS) moment was ignored in order to obtain a greater tensile moment.

$f_T = \dfrac{M_S\cdot c}{I_g}$ $f_T := \dfrac{25.4\cdot(8.5)\cdot 12}{4913}$ $\boxed{f_T = 0.53}$ ksi

f_T =0.53 ksi > 80% f_r = 0.38 ksi; therefore, check crack control criteria

For: #8 at 10" c-c spacing (A_S = 0.94 in^2/ft)

The values for γ_e , d_c , h , and β_s , used to calculate max. spacing (s) of reinforcement are :

$\gamma_e := 0.75$ for Class 2 exposure condition (top reinforcement)

$\boxed{d_c = 2.5}$ in $\boxed{h = 17}$ in $\boxed{\beta_s = 1.25}$

f_{ss} = tensile stress in steel reinforcement at the Service I Limit State (ksi) $\leq$ 0.6 f_y

The moment arm used to calculate f_{ss} is: (j) (h - d_c)
As shown in fatigue calculations in E18-1.7.5.3.1, j = 0.915

The value of f_{ss} and (s) are:

$\boxed{f_{ss} = 24.44}$ ksi < 0.6 f_y O.K. $s \leq \dfrac{700\cdot(0.75)}{1.25\cdot(24.44)} - 2\cdot(2.50) = 17.2 - 5.0 = 12.2$ in

$s \leq 12.2$ in

Therefore, spacing prov'd. = 10 in < 12.2 in <u>O.K.</u>

E18-1.7.5.3.3 Minimum Reinforcement Check

Following the procedure in E18-1.7.2.4, the minimum reinforcement check was found to be O.K.

Therefore, cut 1/2 of bars at 14.5 (ft) from the C/L of the pier. Remaining bars are extended beyond the point of inflection, a distance equal to the effective depth of the slab, 12 bar diameters, or 1/16 of the clear span, whichever is greater. **LRFD [5.11.1.2.3]**

$d_{eff} := 14.5$ in ℓ_d (#8) (See Table 9.9-2, Chapter 9)

$12 \cdot (d_b) = 12 \cdot (1.00) = 12.0$ in

$\frac{S}{16} = \frac{38}{16} = 2.38$ ft controls

Looking at the factored moment diagram (M_u) on Figure E18.9, the point of inflection is found at the (0.11 pt.). Therefore, the remaining bars could be terminated at 36.5 (ft) from the C/L of pier and these bars lapped with smaller size bars spaced at 10 inches.

Because this bar termination point is close to the abutment, run remaining bars (#8 at 10" c-c spacing) to the end of the slab.

E18-1.7.5.4 Span 2 Negative Moment Reinforcement (Cutoffs)

Capacities of #8 at 5" and #8 at 10" c-c spacing are stated in E18-1.7.5.3

The moment diagram equals the capacity of #8 at 10 " at 10.0 (ft) from the C/L of pier. Reinforcement shall be extended beyond this point a distance equal to the effective depth of the slab, 15 bar diameters, or 1/20 of the clear span, whichever is greater. **LRFD [5.11.1.2.1]**

$\frac{S}{20} = \frac{51}{20} = 2.55$ ft controls ℓ_d (#8) (See Table 9.9-2, Chapter 9)

Therefore, 1/2 of bars may be cut at 13.0 (ft) from the C/L of pier if fatigue and crack control criteria are satisfied. (Check at 0.25 pt.)

E18-1.7.5.4.1 Fatigue Check (at Cutoff) - (0.25 Pt.)

Following the procedure in E18-1.7.5.2.1, using Fatigue I Limit State:

$f_s + f'_s \le 24 - 0.33 \cdot f_{min}$ (for f_y = 60 ksi)

Interpolating from Table E18.4, the moments at (0.25 pt.) of span 2 are:

M_{DC} = -0.45 kip-ft M_{DW} = -0.05 kip-ft

+Fatigue Truck = 10.9 kip-ft -Fatigue Truck = -7.0 kip-ft

For simplicity, assume fatigue criteria should be checked and use cracked section properties.

Calculate fatigue moment: $M_{fatigue} = 1.0(M_{DC}) + 1.0(M_{DW}) + 1.5(\text{Fatigue Truck})$

$M_{fatigueMax} := 1.0(-0.45) + 1.0(-0.05) + 1.5(-7.0)$ $\boxed{M_{fatigueMax} = -11.0}$ kip-ft (tension)

$M_{fatigueMin} := 1.0(-0.45) + 1.0(-0.05) + 1.5(10.9)$ $\boxed{M_{fatigueMin} = 15.85}$ kip-ft (compr.)

Looking at values of $M_{fatigue}$, shows that the reinforcement goes through tensile and compressive stress during the fatigue cycle

See Figure E18.11, for definition of d_1, d_2, d', A_s and A'_s.

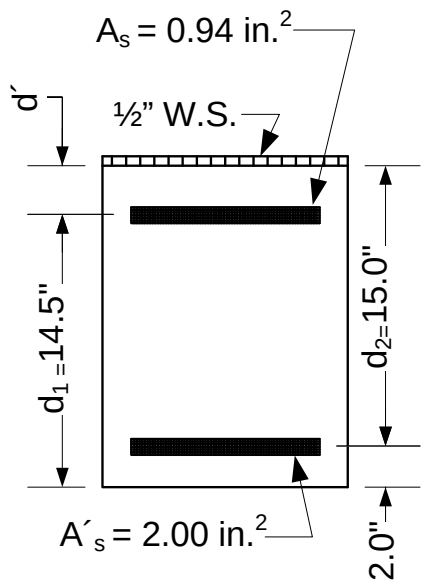

Figure E18.11

Cross Section - (0.25 pt.) Span 2

The moment arm used in equations below is: $(j_1)(d_1)$ for finding f_s
$(j_2)(d_2)$ for finding f'_s

Using: $A_s = 0.94$ in²/ft, $d_1 = 14.5$ in, n = 8, and transformed section analysis, gives a value of $j_1 = 0.915$

Using: $A'_s = 2.00$ in²/ft, $d_2 = 15.0$ in, n = 8, and transformed section analysis, gives a value of $j_2 = 0.886$; $k = x/d_2 = 0.34$, where x = distance from compression face to neutral axis

The tensile part of the stress range in the top bars is computed as:

$$f_s := \frac{M_{fatigueMax} \cdot 12}{A_s \cdot (j_1) \cdot d_1}$$ $\boxed{f_s = 10.58}$ ksi (tension)

The compressive part of the stress range in the top bars is computed as:

$$f'_s := \frac{M_{fatigueMin} \cdot 12}{A'_s \cdot (j_2) \cdot d_2} \cdot \frac{k - \left(\frac{d'}{d_2}\right)}{1 - k}$$

$f'_s = -1.88$ ksi (compression)

It is assumed (#9's at 6") is present at this location as compression steel (A'_s).

Therefore, total stress range on top steel:

$f_s + f'_s = 10.58 - (-1.88) = 12.46$ ksi

$R_r := 24 - 0.33 \cdot f_{min}$ where $f_{min} = f'_s$, therefore: $R_r = 24.62$ ksi

Therefore, $f_s + f'_s = 12.46$ ksi < $R_r = 24.62$ ksi O.K..

E18-1.7.5.4.2 Crack Control Check (at Cutoff) - (0.25 Pt.)

This criteria shall be checked when tension (f_T) in the cross-section exceeds 80% of the modulus of rupture (f_r), specified in **LRFD [5.4.2.6]**.

Following the procedure in E18-1.7.1.3, using Service I Limit State:

$f_r = 0.48$ ksi $f_{r80\%} = 0.38$ ksi $c = 8.5$ in $I_g = 4913$ in^4

$M_s = 1.0(M_{DC}) + 1.0(M_{DW}) + 1.0(M_{LL+IM})$

Interpolating from Table E18.4, the moments at (0.25 pt.) of span 2 are:

M_{DC} = -0.45 kip-ft M_{DW} = -0.05 kip-ft M_{LL+IM} = -4.35 + (-18.25) = -22.6 kip-ft (LL#2)

$M_s := 1.0 \cdot (0.45) + 1.0(0.05) + 1.0 \cdot (22.6)$ $M_s = 23.1$ kip-ft

$$f_T = \frac{M_s \cdot c}{I_g} \qquad f_T := \frac{23.1 \cdot (8.5) \cdot 12}{4913}$$

$f_T = 0.48$ ksi

f_T =0.48 ksi > 80% f_r = 0.38 ksi; therefore, check crack control criteria

For: #8 at 10" c-c spacing (A_s = 0.94 in^2/ft)

The values for γ_e, d_c, h, and β_s, used to calculate max. spacing (s) of reinforcement are :

$\gamma_e := 0.75$ for Class 2 exposure condition (top reinforcement)

$d_c = 2.5$ in $h = 17$ in $\beta_s = 1.25$

f_{ss} = tensile stress in steel reinforcement at the Service I Limit State (ksi) $\leq 0.6\ f_y$

The moment arm used to calculate f_{ss} is: (j) (h - d_c)
As shown in fatigue calculations in E18-1.7.5.3.1, j = 0.915

The value of f_{ss} and (s) are:

$\boxed{f_{ss} = 22.23}$ ksi < 0.6 f_y O.K. $\quad s \leq \dfrac{700\cdot(0.75)}{1.25\cdot(22.23)} - 2\cdot(2.50) = 19.0 - 5.0 = 14.0$ in

$s \leq 14.0$ in

Therefore, spacing prov'd. = 10 in < 14.0 in O.K.

E18-1.7.5.4.3 Minimum Reinforcement Check

Following the procedure in E18-1.7.2.4, the minimum reinforcement check was found to be O.K.

Therefore, cut 1/2 of bars at 13.0 (ft) from the C/L of the pier. Remaining bars are extended beyond the point of inflection, a distance equal to the effective depth of the slab, 12 bar diameters, or 1/16 of the clear span, whichever is greater. **LRFD [5.11.1.2.3]**

$\dfrac{S}{16} = \dfrac{51}{16} = 3.19$ ft controls $\quad \ell_d$ (#8) (See Table 9.9-2, Chapter 9)

Looking at the factored moment diagram (M_u) on Figure E18.9, no point of inflection is found in span 2.

Therefore, run the remaining bars (#8 at 10" c-c spacing) to the C/L of span 2 and lap them.

E18-1.8 Evaluation of Longitudinal Reinforcement for Permit Vehicle

Check the adequacy of the longitudinal reinforcement to see if it has the moment capacity to handle factored moments due to applied dead load (including future wearing surface) and the Wisconsin Standard Permit Vehicle (Wis-SPV) (with a minimum gross vehicle load of 190 kips) on an interior strip. This requirement is stated in 17.1.2.1.

The Wisconsin Standard Permit Vehicle load that can be carried by the bridge is 225 kips, when the future wearing surface is present. Details for the calculation of this load are shown in Chapter 45, "Reinforced Concrete Slab Rating" example.

Wisconsin Standard Permit Vehicle (Wis-SPV) load capacity = 225 kips > 190 kips O.K.

E18-1.9 Longitudinal Reinforcement in Bottom of Haunch

At least (1/4) of maximum positive moment reinforcement in continuous-spans shall extend into the support **LRFD [5.11.1.2.2]**.

Max. positive (A_s) = 2.00 $\frac{in^2}{ft}$ (#9 at 6" c-c spacing, in span 2)

Reinf. req'd. = $0.25 \cdot (2.00) = 0.5 \ \frac{in^2}{ft}$

Therefore, use #7 at 13 in. (0.55 in^2/ft) > reinf. req'd and min. reinf. on Standard 18.01 O.K.

See Figure E18.12 for a summary of longitudinal reinforcement selected and layout of transverse distribution steel selected in E18-1.12.

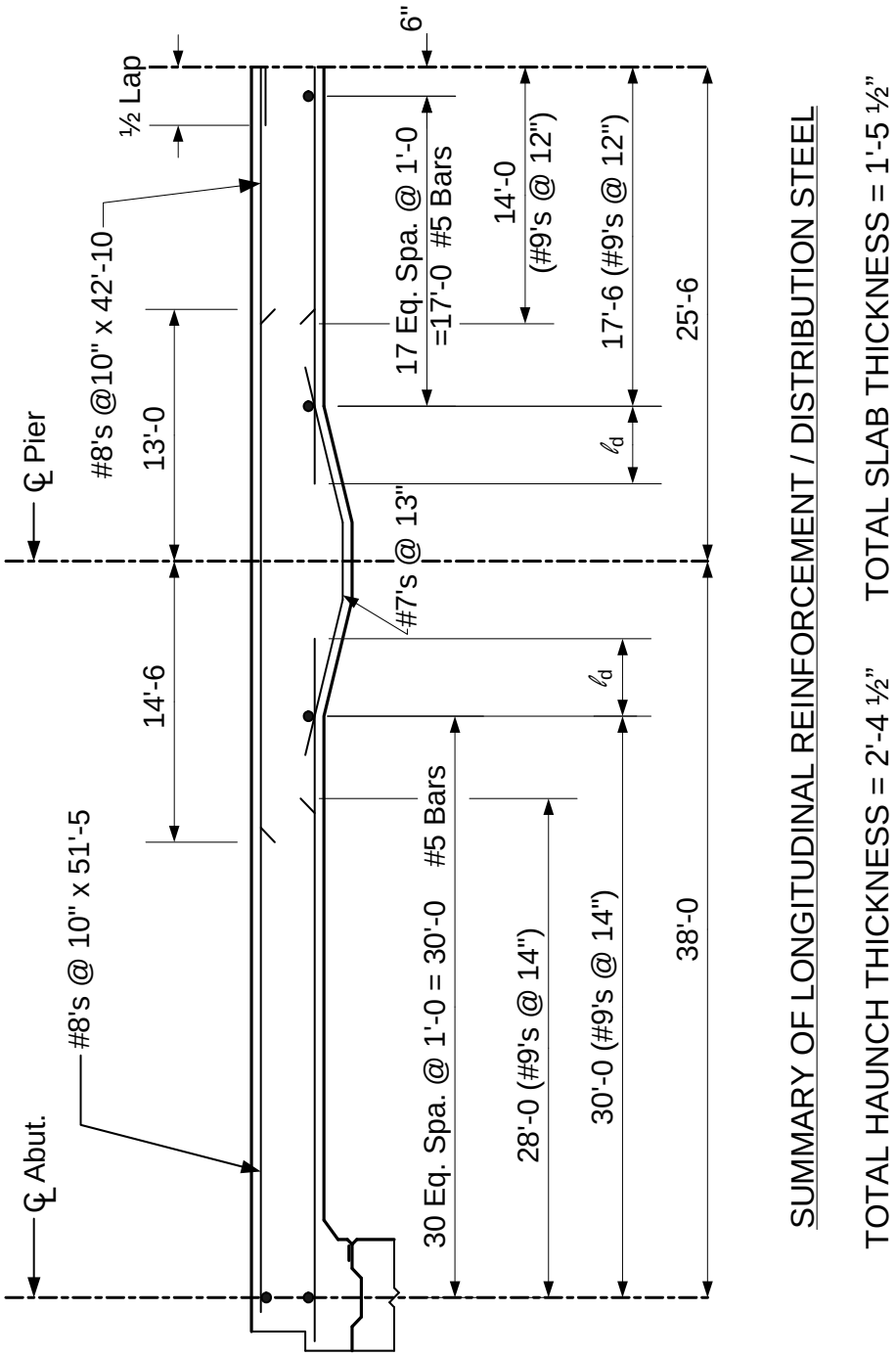

Figure E18.12

Summary of Longitudinal Reinforcement / Distribution Steel

E18-1.10 Live Load Distribution (Exterior Strip)

The exterior strip width (E), is assumed to carry one wheel line and a tributary portion of design lane load **LRFD [4.6.2.1.4]**.

(E) equals the distance between the edge of the slab and the inside face of the barrier, plus 12 inches, plus 1/4 of the full strip width specified in **LRFD [4.6.2.3]**.

The exterior strip width (E) shall not exceed either 1/2 the full strip width or 72 inches.

The distance from the edge of slab to the inside face of barrier = 15 inches

E18-1.10.1 Strength and Service Limit State

Use the smaller equivalent widths, which are from multi-lane loading, for full strip width when (HL-93) live load is to be distributed, for Strength I Limit State and Service I Limit State.

From previous calculations in E18-1.6:

Full strip width = 141 in. (Span 1,3) - multi-lane loading

Full strip width = 151 in. (Span 2) - multi-lane loading

The multiple presence factor (m) has been included in the equations for full strip width and therefore aren't used to adjust the distribution factor. **LRFD [3.6.1.1.2]**

Span 1, 3: $E = 15 + 12 + \frac{141}{4} = 62.2$ in.; but not to exceed $\left(\frac{141}{2}\right.$ in. or 72 in.)

Therefore, E = 62.2 in. (Spans 1, 3)

Span 2: $E = 15 + 12 + \frac{151}{4} = 64.7$ in.; but not to exceed $\left(\frac{151}{2}\right.$ in. or 72 in.)

Therefore, E = 64.7 in. (Span 2)

The distribution factor (DF) is computed for a design slab width equal to one foot.

Compute the distribution factor associated with one truck wheel line, to be applied to axle loads

$$DF = \frac{1\text{wheel_line}}{\left(\frac{2\text{wheel_lines}}{\text{lane}}\right)\cdot E}$$ (where E is in feet)

For Spans 1 & 3: (E = 62.2" = 5.183')

$$DF := \frac{1}{2\cdot(5.183)}$$

$$\boxed{DF = 0.096}\ \frac{\text{lanes}}{\text{ft} - \text{slab}}$$

For Span 2: (E = 64.7" = 5.392')

$$DF := \frac{1}{2\cdot(5.392)} \qquad \boxed{DF = 0.093}\ \frac{lanes}{ft - slab}$$

Look at the distribution factor (for axle loads) calculated for each span and select the largest value. This single value is to be applied along the entire length of the bridge.

Compute the distribution factor associated with tributary portion of design lane load, to be applied to <u>full lane load</u>: **LRFD [3.6.1.2.4]**

$$DF = \left(\frac{\frac{SWL}{10ft_lane_load_width}}{E}\right) \quad \text{(where E is in feet)}$$

SWL = slab width loaded = (E) - (distance from the edge of slab to inside face of barrier) (ft)

= 62.2 - 15 = 47.2 in. = 3.93 ft. (Span 1 & 3)

= 64.7 - 15 = 49.7 in. = 4.14 ft. (Span 2)

For Spans 1 & 3: (E = 5.183' ; SWL = 3.93')

$$DF := \frac{3.93 \div 10}{5.183} \qquad \boxed{DF = 0.076}\ \frac{lanes}{ft - slab}$$

For Span 2: (E = 5.392' ; SWL = 4.14')

$$DF := \frac{4.14 \div 10}{5.392} \qquad \boxed{DF = 0.077}\ \frac{lanes}{ft - slab}$$

Look at the distribution factor (for lane load) calculated for each span and select the largest value. This single value is to be applied along the entire length of the bridge.

Therefore, use : <u>DF = 0.096 lanes/ft.-slab</u>, for Design Truck and Design Tandem Loads

<u>DF = 0.077 lanes/ft.-slab</u>, for Design Lane Load

The concrete parapet is not to be considered to provide strength to the exterior strip (edge beam) **LRFD [9.5.1]**.

TABLE E18.5 Unfactored Moments (kip - ft) (on a one foot design width) **Exterior Strip**

Point	M_{DC} [1]	M_{DW} [2]	DF=0.077 (IM not used) +Design Lane	DF=0.077 (IM not used) -Design Lane	DF=0.096 (incl. IM =33%) +Design Tandem	DF=0.096 (incl. IM =33%) -Design Tandem
0.1	11.9	0.8	2.9	-0.9	19.4	-3.6
0.2	19.6	1.3	5.0	-1.7	32.7	-7.2
0.3	23.0	1.6	6.4	-2.6	40.0	-10.8
0.4	22.2	1.5	7.1	-3.4	42.3	-14.4
0.5	17.3	1.2	7.1	-4.3	40.8	-18.0
0.6	8.1	0.6	6.5	-5.2	36.0	-21.7
0.7	-5.3	-0.4	5.1	-6.0	27.9	-25.2
0.789	-21.1	-1.5	3.3	-6.9	19.0	-28.3
0.8	-22.9	-1.6	3.2	-7.1	17.8	-28.8
0.9	-45.0	-3.1	2.2	-9.8	9.5	-32.4
1.0	-72.6	-4.9	2.0	-14.0	10.4	-36.0
1.1	-36.7	-2.5	1.7	-8.0	8.6	-24.6
1.157	-20.8	-1.4	2.1	-5.6	15.6	-22.3
1.2	-10.1	-0.7	2.6	-4.4	21.3	-20.8
1.3	8.8	0.6	4.9	-3.4	32.6	-16.8
1.4	20.2	1.4	6.8	-3.4	39.9	-12.9
1.5	24.0	1.6	7.4	-3.4	42.2	-9.0

Point	DF=0.096 (incl. IM =33%) +Design Truck	DF=0.096 (incl. IM =33%) -Design Truck	DF=0.077 [3] (IM not used) (90%) of -Design Lane	DF=0.096 [3] (incl. IM =33%) (90%) of -Double Design Trucks
0.1	20.4	-4.4	------	------
0.2	33.1	-8.7	------	------
0.3	38.8	-13.1	------	------
0.4	39.9	-17.4	------	------
0.5	38.2	-21.8	------	------
0.6	34.6	-26.0	------	------
0.7	26.3	-30.5	-5.4	-27.4
0.789	15.8	-34.4	-6.2	-30.9
0.8	14.7	-34.9	-6.4	-31.4
0.9	10.2	-39.1	-8.8	-35.4
1.0	11.4	-45.0	-12.6	-39.5
1.1	9.0	-26.8	-7.2	-25.5
1.157	13.6	-24.5	-5.0	-22.8
1.2	17.3	-22.7	-4.0	-20.9
1.3	31.2	-18.5	------	------
1.4	39.9	-14.1	------	------
1.5	42.0	-9.9	------	------

Superscripts for Table E18.5 are defined on the following page.

In Table E18.5:

1 M_{DC} is moment due to slab dead load (DC_{slab}), parapet dead load (DC_{para}) after its weight is distributed across exterior strip width (E) and 1/2 inch wearing surface ($DC_{1/2"WS}$).

Using average of exterior strip widths: $\frac{62.2 + 64.7}{2}$ = 63.5 in = 5.3 ft

DC_{para} = (Parapet wgt.) / 5.3 ft = (387 plf) / 5.3 ft = 73 plf (on a 1'-0 slab width)

2 M_{DW} is moment due to future wearing surface (DW_{FWS})

3 The points of contraflexure are located at the (0.66 pt.) of span 1 and the (0.25 pt.) of span 2, when a uniform load is placed across the entire structure. Negative moments in these columns are shown between the points of contraflexure per **LRFD [3.6.1.3.1]**.

E18-1.11 Longitudinal Slab Reinforcement (Exterior Strip)

Select longitudinal reinforcement for an Exterior Strip (edge beam) **LRFD [5.14.4.1]**.

The reinforcement in the Exterior Strip is always equal to or greater than that required for the slab in an Interior Strip.

The concrete cover on the top bars is 2 1/2 inches, which includes a 1/2 inch wearing surface. The bottom bar cover is 1 1/2 inches. (See 18.4.6)

E18-1.11.1 Positive Moment Reinforcement for Span 1

Examine the 0.4 point of span 1

E18-1.11.1.1 Design for Strength

Following the procedure in E18-1.7.1.1, using Strength I Limit State:

$$M_u = 1.25(M_{DC}) + 1.50(M_{DW}) + 1.75(M_{LL+IM}) \leq 0.90\, A_s\, f_s\, (d_s - a/2)$$

The positive live load moment shall be the largest caused by live loads (LL#1 or LL#2). See Table E18.2 and E18.3 in E18-1.4 for description of live loads and dynamic load allowance (IM).

From Table E18.5, the largest live load moment is from (LL#1), therefore at (0.4 pt.) of span 1:

M_{DC} = 22.2 kip-ft M_{DW} = 1.5 kip-ft M_{LL+IM} = 7.1 + 42.3 = 49.4 kip-ft

$M_u := 1.25 \cdot (22.2) + 1.50 \cdot (1.5) + 1.75 \cdot (49.4)$ $\boxed{M_u = 116.5}$ kip-ft

$b := 12$ inches (for a one foot design width) and $\boxed{d_s = 14.9}$ in

The coefficient of resistance, R_u, the reinforcement ratio, ρ, and req'd. bar steel area, A_s, are:

$\boxed{R_u = 583}$ psi $\boxed{\rho = 0.0108}$ $\boxed{A_s = 1.93}$ $\frac{in^2}{ft}$

For Span 1 & 3:

A_s (req'd) = 1.93 $\frac{in^2}{ft}$ (to satisfy Exterior Strip requirements)

A_s (prov'd) = 1.71 $\frac{in^2}{ft}$ (#9 at 7" c-c spacing) (to satisfy Interior Strip requirements)

Therefore, <u>use: #9 at 6" c-c spacing</u> (A_s = 2.00 $\frac{in^2}{ft}$) in Exterior Strip width of 5.3 ft.

E18-1.11.1.2 Check Crack Control

Following the procedure in E18-1.7.1.3, the crack control check was found to be <u>O.K.</u>

E18-1.11.1.3 Minimum Reinforcement Check

Following the procedure in E18-1.7.1.4, the minimum reinforcement check was found to be <u>O.K.</u>

E18-1.11.2 Positive Moment Reinforcement for Span 2

<u>Examine the 0.5 point of span 2</u>

E18-1.11.2.1 Design for Strength

Following the procedure in E18-1.7.1.1, using Strength I Limit State:

$$M_u = 1.25(M_{DC}) + 1.50(M_{DW}) + 1.75(M_{LL+IM}) \leq 0.90\, A_s\, f_s\, (d_s - a/2)$$

The positive live load moment shall be the largest caused by live loads (LL#1 or LL#2). See Table E18.2 and E18.3 in E18-1.4 for description of live loads and dynamic load allowance (IM).

From Table E18.5, the largest live load moment is from (LL#1), therefore at (0.5 pt.) of span 2:

M_{DC} = 24.0 kip-ft M_{DW} = 1.6 kip-ft M_{LL+IM} = 7.4 + 42.2 = 49.6 kip-ft

$M_u := 1.25\cdot(24.0) + 1.50\cdot(1.6) + 1.75\cdot(49.6)$ $\boxed{M_u = 119.2}$ kip-ft

$b := 12$ inches (for a one foot design width) and $\boxed{d_s = 14.9}$ in

The coefficient of resistance, R_u, the reinforcement ratio, ρ, and req'd. bar steel area, A_s, are:

$\boxed{R_u = 597}$ psi $\boxed{\rho = 0.011}$ $\boxed{A_s = 1.97}$ $\frac{in^2}{ft}$

For Span 2:

A_s (req'd) = 1.97 $\frac{in^2}{ft}$ (to satisfy Exterior Strip requirements)

A_s (prov'd) = 2.00 $\frac{in^2}{ft}$ (#9 at 6" c-c spacing) (to satisfy Interior Strip requirements)

Therefore, <u>use: #9 at 6" c-c spacing</u> (A_s = 2.00 $\frac{in^2}{ft}$) in both Interior and Exterior Strips.

E18-1.11.2.2 Check Crack Control

Following the procedure in E18-1.7.1.3, the crack control check was found to be <u>O.K.</u>

E18-1.11.2.3 Minimum Reinforcement Check

Following the procedure in E18-1.7.1.4, the minimum reinforcement check was found to be <u>O.K.</u>

E18-1.11.3 Negative Moment Reinforcement at Piers

<u>Examine at C/L of Pier</u>

E18-1.11.3.1 Design for Strength

Following the procedure in E18-1.7.1.1, using Strength I Limit State:

$$M_u = 1.25(M_{DC}) + 1.50(M_{DW}) + 1.75(M_{LL+IM}) \leq 0.90\, A_s\, f_s\, (d_s - a/2)$$

The negative live load moment shall be the largest caused by live loads (LL#1, LL#2 or LL#3). See Table E18.2 and E18.3 in E18-1.4 for description of live loads and dynamic load allowance (IM).

From Table E18.5, the largest live load moment is from (LL#2) and therefore at (C/L of Pier) :

M_{DC} = -72.6 kip-ft M_{DW} = -4.9 kip-ft M_{LL+IM} = -14.0 + (-45.0) = -59.0 kip-ft

$M_u := 1.25\cdot(-72.6) + 1.50\cdot(-4.9) + 1.75\cdot(-59.0)$ $\boxed{M_u = -201.3}$ kip-ft

$b := 12$ inches (for a one foot design width) and $\boxed{d_s = 25.5}$ in

The coefficient of resistance, R_u, the reinforcement ratio, ρ, and req'd. bar steel area, A_s, are:

$\boxed{R_u = 344}$ psi $\boxed{\rho = 0.0061}$ $\boxed{A_s = 1.87}$ $\frac{in^2}{ft}$

At C/L Pier:

A_s (req'd) = 1.87 $\frac{in^2}{ft}$ (to satisfy Exterior Strip requirements)

A_s (prov'd) = 1.88 $\frac{in^2}{ft}$ (#8 at 5" c-c spacing) (to satisfy Interior Strip requirements)

Therefore, <u>use: #8 at 5" c-c spacing</u> (A_s = 1.88 $\frac{in^2}{ft}$) in both Interior and Exterior Strips

E18-1.11.3.2 Check Crack Control

Following the procedure in E18-1.7.1.3, the crack control check was found to be <u>O.K.</u>

E18-1.11.3.3 Minimum Reinforcement Check

Following the procedure in E18-1.7.2.4, the minimum reinforcement check was found to be <u>O.K.</u>

<u>Edge Beam Reinforcement:</u>

The only location where Interior Strip reinforcement is not also placed in the Exterior Strip is in Span 1 and 3 for the bottom bars, as shown in Figure E18.13.

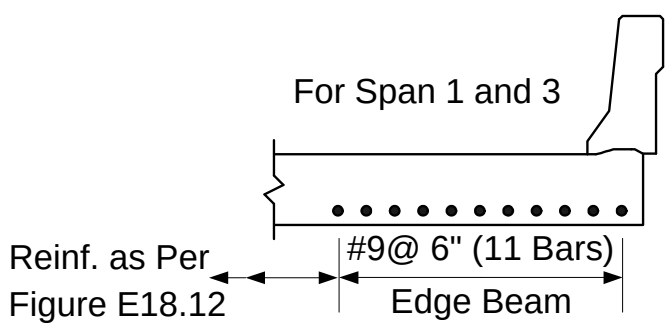

<u>Figure E18.13</u>

Exterior Strip Reinforcement

E18-1.11.4 Bar Steel Cutoffs

Select longitudinal reinforcement cutoff locations for an Exterior Strip.

Follow the procedure in E18-1.7.5, using reinforcement placed in the Exterior Strip. The

cutoff locations must meet crack control requirements (fatigue criteria is not applied to an Exterior Strip).

E18-1.11.4.1 Span 1 Positive Moment Reinforcement (Cutoffs)

It was found that 1/2 of the bars in the Exterior Strip may be cut at 10.5 (ft) from the C/L of pier. The bars in the Interior Strip are to be cut at 10.0 (ft) from the C/L of pier. In order to use the same bar mark for this reinforcement, cut 1/2 of all positive reinforcement in the span at 10.0 (ft) from the C/L of pier, if crack control criteria in Exterior Strip is satisfied. The remaining bars follow the layout as shown in Figure E18.12.

E18-1.11.4.1.1 Check Crack Control

Following the procedure in E18-1.7.1.3, the crack control check was found to be O.K.

E18-1.11.4.2 Span 2 Positive Moment Reinforcement (Cutoffs)

It was found that 1/2 of the bars in the Exterior Strip may be cut at 11.0 (ft) from the C/L of pier. The bars in the Interior Strip are to be cut at 11.5 (ft) from the C/L of pier. In order to use the same bar mark for this reinforcement, cut 1/2 of all positive reinforcement in the span at 11.0 (ft) from the C/L of each pier, if crack control criteria in Exterior Strip is satisfied. The remaining bars follow the layout as shown in Figure E18.12.

E18-1.11.4.2.1 Check Crack Control

Following the procedure in E18-1.7.1.3, the crack control check was found to be O.K.

E18-1.11.4.3 Span 1 Negative Moment Reinforcement (Cutoffs)

It was found that 1/2 of the bars in the Exterior Strip may be cut at 15.5 (ft) from the C/L of pier. The bars in the Interior Strip are to be cut at 14.5 (ft) from the C/L of pier. In order to use the same bar mark for this reinforcement, cut 1/2 of all negative reinforcement in the span at 15.5 (ft) from the C/L of pier, if crack control criteria in Exterior Strip is satisfied. The remaining bars follow the layout as shown in Figure E18.12.

E18-1.11.4.3.1 Check Crack Control

Following the procedure in E18-1.7.1.3, the crack control check was found to be O.K.

E18-1.11.4.4 Span 2 Negative Moment Reinforcement (Cutoffs)

It was found that 1/2 of the bars in the Exterior Strip may be cut at 13.5 (ft) from the C/L of pier. The bars in the Interior Strip are to be cut at 13.0 (ft) from the C/L of pier. In order to use the same bar mark for this reinforcement, cut 1/2 of all negative reinforcement in the span at 13.5

(ft) from the C/L of pier, if crack control criteria in Exterior Strip is satisfied. The remaining bars follow the layout as shown in Figure E18.12.

E18-1.11.4.4.1 Check Crack Control

Following the procedure in E18-1.7.1.3, the crack control check was found to be O.K.

E18-1.12 Transverse Distribution Reinforcement

The criteria for main reinforcement parallel to traffic is applied. The amount of transverse distribution reinforcement (located in bottom of slab) is to be determined as a percentage of the main reinforcing steel required for positive moment **LRFD [5.14.4.1]**.

Spans 1 & 3:

$$\text{Percentage} = \frac{100\%}{\sqrt{L}} \le 50\% \quad \text{Max.} \quad (\text{L is the span length in feet})$$

Main positive reinforcement equals #9 at 7" c-c spacing ($A_s = 1.71 \frac{in^2}{ft}$)

$$\text{Percentage} = \frac{100\%}{\sqrt{38}} = 16.2\% < 50\% \quad \text{Max.}$$

$A_s := 0.162 \cdot (1.71)$ $\boxed{A_s = 0.28}$ $\frac{in^2}{ft}$

Therefore, use #5 at 12" c-c spacing $A_s = 0.31 \frac{in^2}{ft}$

Span 2:

Main positive reinforcement equals #9 at 6" c-c spacing ($A_s = 2.00 \frac{in^2}{ft}$)

$$\text{Percentage} = \frac{100\%}{\sqrt{51}} = 14.0\% < 50\% \quad \text{Max.}$$

$A_s := 0.140 \cdot (2.00)$ $\boxed{A_s = 0.28}$ $\frac{in^2}{ft}$

Therefore, use #5 at 12" c-c spacing $A_s = 0.31 \frac{in^2}{ft}$

Refer to Standard 18.01 for placement of distribution reinforcement. For simplicity, the distribution reinforcement has been placed as shown in Figure E18.12.

E18-1.13 Shrinkage and Temperature Reinforcement Check

Check shrinkage and temperature reinforcement criteria for the reinforcement selected in preceeding sections.

E18-1.13.1 Longitudinal and Transverse Distribution Reinforcement

The area of reinforcement (A_s) per foot, for shrinkage and temperature effects, on each face and in each direction shall satisfy: **LRFD [5.10.8.2]**

$$A_s \geq \frac{1.30 \cdot b \cdot (h)}{2 \cdot (b + h) \cdot f_y} \qquad \text{and} \qquad 0.11 \leq A_s \leq 0.60$$

Where:

A_s = area of reinforcement in each direction and each face $\left(\frac{in^2}{ft}\right)$

b = least width of component section (in.)

h = least thickness of component section (in.)

f_y = specified yield strength of reinforcing bars (ksi) $\leq$ 75 ksi

For cross-section of slab away from the haunch, the slab depth is 17 in., therefore:

$b := slab_{width}$ $\boxed{b = 510}$ in

$h := d_{slab}$ $\boxed{h = 17}$ in

$\boxed{f_y = 60}$ ksi

For each face, req'd A_s is:

$$A_s \geq \frac{1.30 \cdot (510) \cdot 17}{2 \cdot (510 + 17) \cdot 60} = 0.178 \ \frac{in^2}{ft} \quad \text{, therefore,} \quad 0.11 \leq A_s \leq 0.60 \quad \underline{\text{O.K.}}$$

For cross-section of slab at C/L of pier, the slab depth is 28 in., therefore:

$b := slab_{width}$ $\boxed{b = 510}$ in

$h := D_{haunch}$ $\boxed{h = 28}$ in

$\boxed{f_y = 60}$ ksi

For each face, req'd A_s is:

$$A_s \geq \frac{1.30 \cdot (510) \cdot 28}{2 \cdot (510 + 28) \cdot 60} = 0.288 \ \frac{in^2}{ft} \quad \text{, therefore,} \quad 0.11 \leq A_s \leq 0.60 \quad \underline{\text{O.K.}}$$

Shrinkage and temperature reinforcement shall not be spaced farther apart than 3.0 times the component thickness or 18 inches.

Max. spa = 3.0(17) = 51 in. or <u>18 in. governs</u>

In **LRFD [5.10.3.2]**, the maximum center to center spacing of adjacent bars is also 18 inches.

All longitudinal reinforcement (top/bottom) and transverse distribution reinforcement (bottom) in the slab exceeds A_s req'd. for each face, and does not exceed maximum spacing. O.K.

E18-1.14 Shear Check of Slab

Slab bridges designed for dead load and (HL-93) live load moments in conformance with **LRFD [4.6.2.3]** may be considered satisfactory in shear. O.K. per **LRFD [5.14.4.1]**

E18-1.15 Longitudinal Reinforcement Tension Check

Check the longitudinal reinforcement (in bottom of slab) located at the abutments for resistance to tension caused by shear **LRFD [5.8.3.5]**, using Strength I Limit State. Calculate shear from dead load and (HL-93) live load on interior and exterior strips. Assume a diagonal crack would start at the inside edge of the bearing area.

The concrete slab rests on an A1 (fixed) abutment, which has a width of 2.5 ft. For a 6 degree skew, the distance along the C/L of the bridge is 2.52 ft. Determine the distance D_{crack} from the end of the slab to the point at which the diagonal crack will intersect the bottom longitudinal reinforcement.

Assume the crack angle is: $\theta := 35$ degrees

The distance from the bottom of slab to the center of tensile reinforcement is 2.06 inches.

$$D_{crack} := (2.52) + \left(\frac{2.06}{12}\right)\cdot\frac{\cot(\theta)}{\cos(6)} \qquad \boxed{D_{crack} = 2.78} \text{ ft}$$

For an interior strip:

The longitudinal reinforcement provided is #9 at 7" c-c spacing ($1.71\ \frac{in^2}{ft}$)

The development length (ℓ_d) from (Table 9.9-2, Chapter 9) is 3'-9" (3.75 ft.)

The nominal tensile resistance (T_{nom}), of the longitudinal bars at the crack location is:

$$T_{nom} = A_s\cdot(f_y)\cdot\left[\frac{D_{crack} - (end_cover)}{dev_length}\right] \le A_s\cdot(f_y) = 102.6 \text{ kips}$$

$$T_{nom} := (1.71)\cdot 60.0\cdot\left(\frac{2.78\cdot 12 - 2}{3.75\cdot 12}\right) \qquad \boxed{T_{nom} = 71.5} \text{ kips}$$

The factored tension force (T_{fact}), from shear, to be resisted is from **LRFD [Eq'n. 5.8.3.5-2]**, where $V_s = V_p = 0$, is:

$$T_{fact} = \left(\frac{V_u}{\phi_v}\right)\cdot\cot(\theta)$$

Looking at E18-1.2: $\eta_i := 1.0$

and from Table E18.1: $\gamma_{DCmax} := 1.25$ $\gamma_{DWmax} := 1.50$ $\gamma_{LLstr1} := 1.75$ $\phi_v := 0.9$

$Q_i = V_{DC}, V_{DW}, V_{LL+IM}$ **LRFD [3.6.1.2, 3.6.1.3.3]**; shear due to <u>applied loads</u> as stated in E18-1.2

$Q = V_u = \eta_i\,[\gamma_{DCmax}(V_{DC}) + \gamma_{DWmax}(V_{DW}) + \gamma_{LLstr1}(V_{LL+IM})]$

$= 1.0\,[1.25(V_{DC}) + 1.50(V_{DW}) + 1.75(V_{LL+IM})]$

Therefore:

$V_u = 1.25(V_{DC}) + 1.50(V_{DW}) + 1.75(V_{LL+IM})$ (Factored Load Equation)

The live load shear shall be the largest caused by live loads (LL#1 or LL#2). See Table E18.2 and E18.3 in E18-1.4 for description of live loads and dynamic load allowance (IM).

From the computer analysis, for a <u>one foot design width</u>:

$V_{DC} = 2.96$ kip $V_{DW} = 0.3$ kip $V_{LL+IM} = 0.94 + 5.68 = 6.62$ kip (LL#2)

$V_u := 1.25\cdot(2.96) + 1.50\cdot(0.3) + 1.75\cdot(6.62)$ $\boxed{V_u = 15.74}$ kips (at C/L abutment)

$T_{fact} := \left(\frac{V_u}{\phi_v}\right)\cdot\cot(\theta)$ $\boxed{T_{fact} = 24.97}$ kips

Therefore: $T_{fact} = 24.97$ kips < $T_{nom} = 71.5$ kips <u>O.K.</u>

For simplicity, the value of V_u at the abutment centerline was used.

If the values for T_{fact} and T_{nom} were close, the procedure for determining the crack angle (θ) as outlined in **LRFD [5.8.3.4.2]** should be used.

The Exterior Strip was also examined and the longitudinal reinforcement was found to be satisfactory. <u>O.K.</u>

<u>E18-1.16 Transverse Reinforcement in Slab over the Piers</u>

The bridge in this example has a pier with (4) circular columns and a (2.5 ft x 2.5 ft) pier cap with rounded cap ends. (See Figure E18.14)

Out to out width of slab = $slab_{width}$ $\boxed{slab_{width} = 42.5}$ ft

Width of slab along skew = $slab_{skew} = \frac{42.5}{\cos(6deg)}$ $\boxed{slab_{skew} = 42.73}$ ft

Using a 6 inch offset from edge of slab to edge of pier cap per Standard 18.02 gives:

Length of Pier cap = cap_{length}

$$cap_{length} = 42.73 - 2\cdot\left(\frac{1.25+0.5}{\cos(6deg)} - 1.25\right) \qquad \boxed{cap_{length} = 41.71} \text{ ft}$$

E18-1.16.1 Dead Load Moments

Find the reaction, S_{DL} , (on a one foot slab width) at the pier due to (DC_{slab}) and ($DC_{1/2"WS}$). This dead load will be carried by the pier cap.

From the computer analysis, $S_{DL} := 12.4 \frac{kip}{ft}$ at the pier.

For a 2.5 ft by 2.5 ft pier cap: $Cap_{DL} := 1.0 \frac{kip}{ft}$

Therefore, the uniform dead load on the pier cap = PDL

$$PDL := S_{DL} + Cap_{DL} \qquad \boxed{PDL = 13.4} \frac{kip}{ft}$$

Calculate the dead load moments at columns (A,B,C & D), as shown in Figure E18.14, using the three-moment equation. The moments at columns (A & D) are equal, therefore:

$$M_A = \frac{1}{2}(PDL)\cdot L^2 \qquad M_A := \frac{1}{2}\cdot(13.4)\cdot 1.25^2 \qquad \boxed{M_A = 10.5} \text{ kip-ft} \qquad \boxed{M_D = 10.5} \text{ kip-ft}$$

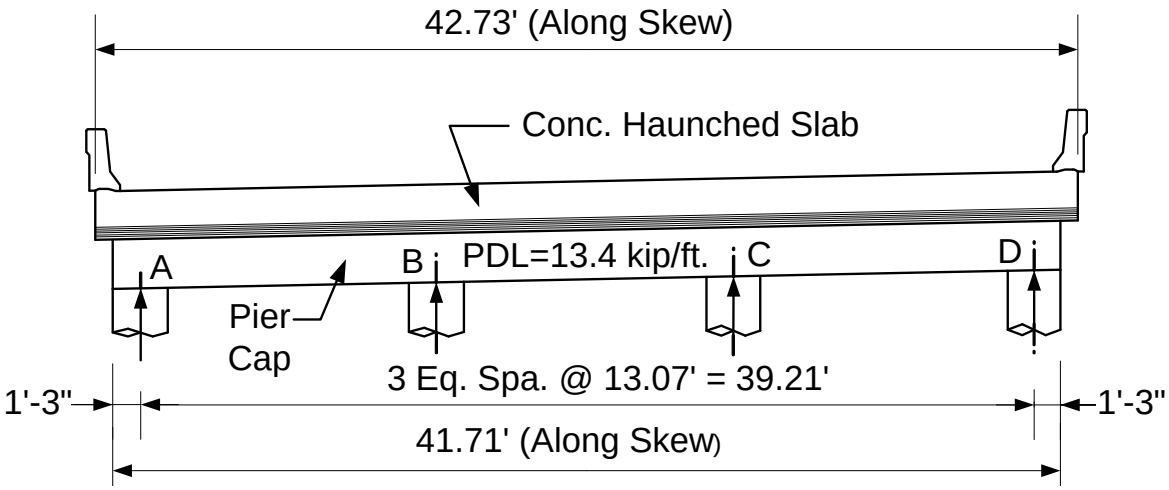

Figure E18.14

Section along C/L of Pier

Applying the three-moment equation for M_B gives values of:

$$\frac{6 \cdot A \cdot a}{L} = \frac{6 \cdot A \cdot b}{L} = \frac{(PDL) \cdot L^3}{4} \qquad \frac{(PDL) \cdot L^3}{4} = \frac{(13.4) \cdot 13.07^3}{4} = 7480 \text{ kip-ft}$$

The three-moment equation is: $M_A \cdot L_1 + 2 \cdot M_B \cdot (L_1 + L_2) + M_c \cdot L_2 + 6 \cdot \frac{A_1 \cdot a_1}{L_1} + 6 \frac{A_2 \cdot b_2}{L_2} = 0$

Refer to "Strength of Materials" textbook for derivation of the three-moment equation.

Other methods such as influence tables or moment distribution can also be used to obtain the dead load moments.

If M_A is known and due to symmetry $M_B = M_C$; the above equation reduces to one unknown, M_B, as follows:

$$(-10.5) \cdot 13.07 + 2 \cdot M_B \cdot (13.07 + 13.07) + M_B \cdot (13.07) + 7480 + 7480 = 0$$

Therefore, solving for M_B and knowing $M_C = M_B$: $\boxed{M_B = 226.8}$ kip-ft $\boxed{M_C = 226.8}$ kip-ft

Find the reaction (on a one foot slab width) at the pier due to (DC_{FWS}) and (DC_{para}). This dead load will be carried by the pier cap and a transverse beam represented by a portion of the slab over the pier.

From the computer analysis, FWS + para. (DL) = 1.9 $\frac{\text{kip}}{\text{ft}}$ at the pier.

Using the three-moment equation, $\boxed{M_A = 1.5}$ kip-ft $\boxed{M_D = 1.5}$ kip-ft

$\boxed{M_B = 32.2}$ kip-ft $\boxed{M_C = 32.2}$ kip-ft

The partial dead load moment diagram for "PDL" and "FWS + para (DL)" is shown in Figure E18.15.

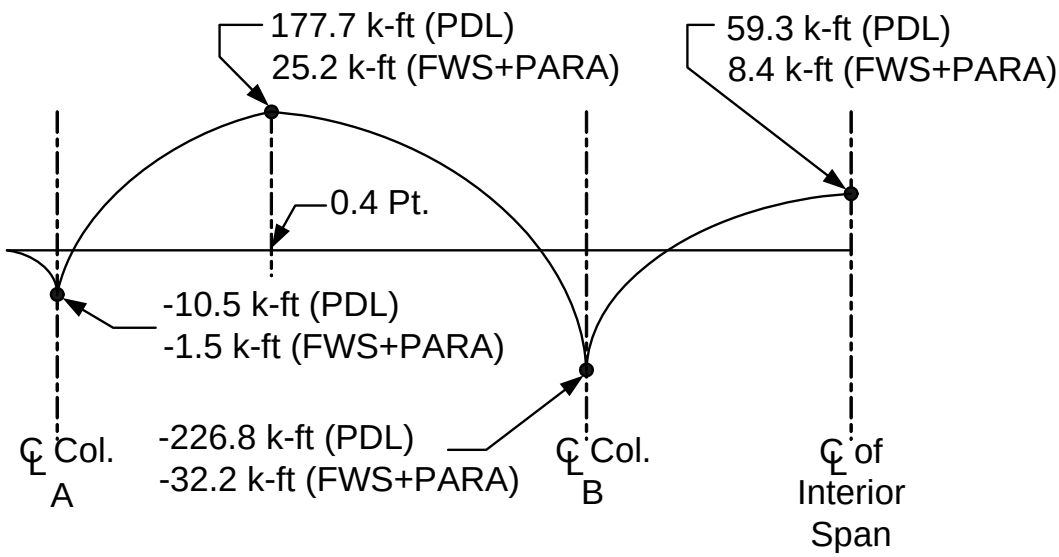

Figure E18.15

Dead Load Moment Diagram

E18-1.16.2 Live Load Moments

The maximum live load reactions at the pier shall be the largest caused by live loads (LL#1, LL#2 or LL#3). See Table E18.2 and E18.3 in E18-1.4 for description of live loads and dynamic load allowance (IM).

The reactions per lane (from computer analysis), before applying the dynamic load allowance (IM) are:

Design Lane Load = 35.1 kips

Design Tandem = 50.0 kips

Design Truck = 68.9 kips

90% Double Design Trucks = 62.1 kips

90% Design Lane Load = 31.6 kips

The largest live load reaction is from: Design Truck + Design Lane Load (LL#2)

The dynamic load allowance (IM) is 33% .

Design Truck Reaction (including IM = 33%):

$$1.33 \cdot (68.9) = 91.64 \ \frac{\text{kip}}{\text{truck}} \text{, therefore, Wheel Load} = \frac{91.64}{2} = 45.8 \ \frac{\text{kip}}{\text{wheel}}$$

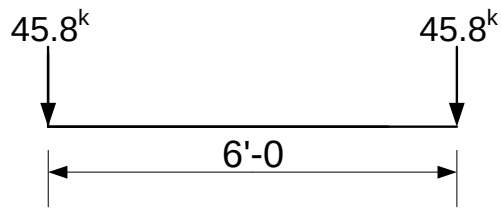

Figure E18.16

Design Truck Reaction

Design Lane Load Reaction (IM not applied to Lane Load):

$$\frac{(35.1)\,\text{kip}}{(10)_\text{ft lane}} = 3.51\,\frac{\text{kip}}{\text{ft}}$$

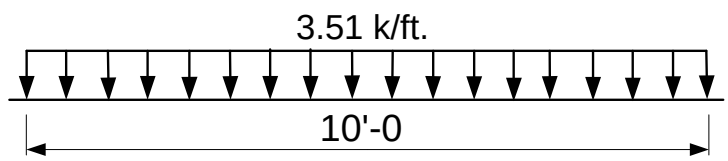

Figure E18.17

Design Lane Load Reaction

This live load is carried by the pier cap and a transverse beam represented by a portion of the slab over the pier.

Using influence lines for a 3-span continuous beam, the following results are obtained. The multiple presence factor (m) is 1.0 for (2) loaded lanes. **LRFD [3.6.1.1.2]**.

Calculate the positive live load moment, M_{LL+IM}, at (0.4 pt.) of Exterior Span

Because lane width of (10 ft) is almost equal to the span length (13.07 ft), for simplicity place uniform lane load reaction across the entire span, as shown in Figure E18.18.

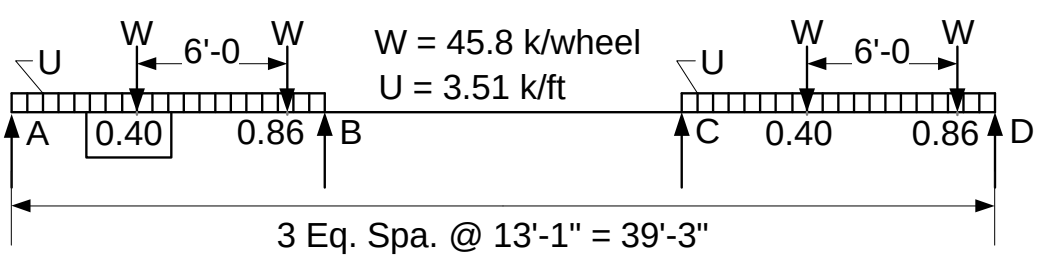

Figure E18.18

Live Load Placement for $+M_{LL+IM}$

M_{LL+IM} = (0.2042 + 0.0328 + 0.0102 + 0.0036)(45.8)(13.07) + (0.100)(3.51)(13.07)^2
= 150.1 + 60.0
= 210.1 kip-ft (Max + M_{LL+IM} in Ext. Span - 0.4 pt.)

Calculate the negative live load moment, M_{LL+IM}, at C/L of column B

Because lane width of (10 ft) is almost equal to the span length (13.07 ft), for simplicity place uniform lane load reaction across the entire span, as shown in Figure E18.19.

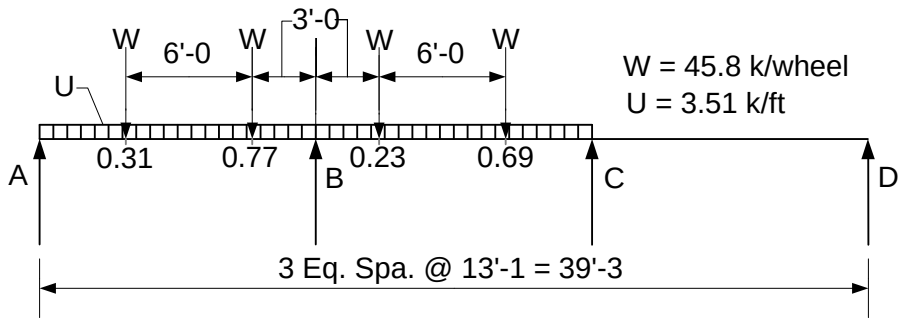

Figure E18.19

Live Load Placement for $-M_{LL+IM}$

M_{LL+IM} = (0.07448 + 0.08232 + 0.0679 + 0.0505)(45.8)(13.07) + (0.1167)(3.51)(13.07)^2
= 164.7 + 70.0
= 234.7 kip-ft (Max - M_{LL+IM} at C/L of column B)

It is assumed for this example that adequate shear transfer has been achieved **LRFD [5.8.4]** between transverse slab member and pier cap and that they will perform as a unit. Therefore, "FWS + para (DL)" and "LL + IM" will be acting on a member made up of the pier cap and the transverse slab member. Designer must insure adequate transfer if using this approach.

Calculate section width, b_{pos}, and effective depth, d_{pos}, in positive moment region, for the pier cap and the transverse slab member acting as a unit (See Figure E18.20):

b_{pos} = width of slab section = 1/2 center to center column spacing or 8 feet, whichever is smaller (See 18.4.7.2).

(C/L - C/L) column spacing x (1/2) = 6.5 ft < 8.0 ft $\boxed{b_{pos} = 78}$ in

$d_{pos} = D_{haunch}$ + cap depth - bott. clr. - stirrup dia. - 1/2 bar dia.

$d_{pos} := 28 + 30 - 1.5 - 0.625 - 0.44$ $\boxed{d_{pos} = 55.44}$ in

Calculate section width, b_{neg}, and effective depth, d_{neg}, in negative moment region, for the pier cap and the transverse slab member acting as a unit (See Figure E18.20):

b_{neg} = width of pier cap = 2.5 ft $\boxed{b_{neg} = 30}$ in

$d_{neg} = D_{haunch}$ + cap depth - top clr. - top bar dia. - 1/2 bar dia.

$d_{neg} := 28 + 30 - 2 - 1 - 0.38$ $\boxed{d_{neg} = 54.62}$ in

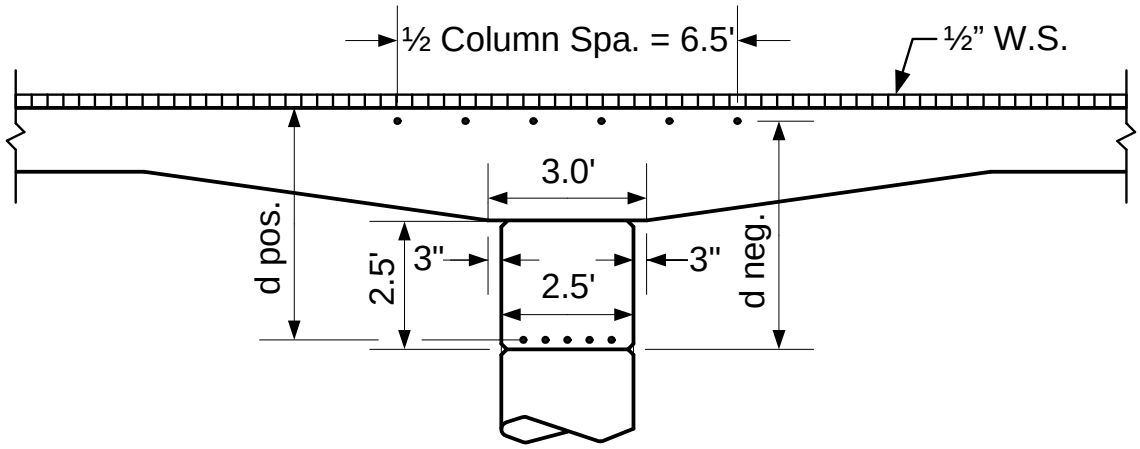

Figure E18.20

Details for Transverse Slab Member

E18-1.16.3 Positive Moment Reinforcement for Pier Cap

Examine the 0.4 point of the Exterior span

E18-1.16.3.1 Design for Strength

The dead load, PDL, carried by the pier cap is from (DC_{slab}) + ($DC_{1/2"WS}$) + Pier Cap DL.

Following the procedure in E18-1.7.1.1, using Strength I Limit State:

$M_u = 1.25(M_{DC}) + 1.50(M_{DW}) + 1.75(M_{LL+IM})$

M_{DC} = 177.7 kip-ft (See Figure E18.15)

$M_u := 1.25 \cdot (177.7)$ (contribution from PDL) $\boxed{M_u = 222.1}$ kip-ft

b_{cap} = 2.5ft (pier cap width) $\boxed{b_{cap} = 30}$ in

d_s = pier cap depth - bott. clr. - stirrup dia. - 1/2 bar dia.

$d_s := 30 - 1.5 - 0.625 - 0.44$ $\boxed{d_s = 27.43}$ in

The coefficient of resistance, R_u, the reinforcement ratio, ρ, and req'd. bar steel area, A_{s1}, are:

$R_u = 131$ psi $\rho = 0.00223$ $A_{s1} = 1.84$ in^2

The dead loads (FWS + para DL) and live load (LL+IM) are carried by the pier cap and the transverse slab member acting as a unit.

Split the (FWS + para DL) dead load moment (from Figure E18.15) into components:

$M_{DC} := 11.9$ kip-ft (moment from para DL)

$M_{DW} := 13.3$ kip-ft (moment from FWS)

$M_{LL+IM} = 210.1$ kip-ft

$M_u := 1.25 \cdot (11.9) + 1.50 \cdot (13.3) + 1.75 \cdot (210.1)$ $M_u = 402.5$ kip-ft

$b_{pos} = 78$ in (See E18-1.16.2)

$d_{pos} = 55.44$ in (See E18-1.16.2)

The coefficient of resistance, R_u, the reinforcement ratio, ρ, and req'd. bar steel area, A_{s2}, are:

$R_u = 22.4$ psi $\rho = 0.00037$ $A_{s2} = 1.6$ in^2

$A_{s_total} := A_{s1} + A_{s2}$ $A_{s_total} = 3.44$ in^2

E18-1.16.4 Negative Moment Reinforcement for Pier Cap

Examine at C/L of Column "B"

E18-1.16.4.1 Design for Strength

The dead load, PDL, carried by the pier cap is from (DC_{slab}) + ($DC_{1/2"WS}$) + Pier Cap DL.

Following the procedure in E18-1.7.1.1, using Strength I Limit State:

$M_u = 1.25(M_{DC}) + 1.50(M_{DW}) + 1.75(M_{LL+IM})$

$M_{DC} = 226.8$ kip-ft (See Figure E18.15)

$M_u := 1.25 \cdot (226.8)$ (contribution from PDL) $M_u = 283.5$ kip-ft

$b_{cap} = 30$ in (pier cap width)

$d_s =$ pier cap depth - top clr. - stirrup dia. - 1/2 bar dia.

$d_s := 30 - 1.5 - 0.625 - 0.44$ $d_s = 27.43$ in

The coefficient of resistance, R_u, the reinforcement ratio, ρ, and req'd. bar steel area, A_s, are:

$R_u = 167$ psi $\rho = 0.00286$ $A_s = 2.35$ in^2

E18-1.16.5 Positive Moment Reinforcement for Transverse Slab Member

See Standard 18.01 for minimum reinforcement at this location

E18-1.16.6 Negative Moment Reinforcement for Transverse Slab Member

Examine at C/L of Column "B"

E18-1.16.6.1 Design for Strength

The dead loads (FWS + para DL) and live load (LL+IM) are carried by the pier cap and the transverse slab member acting as a unit.

Following the procedure in E18-1.7.1.1, using Strength I Limit State:

$M_u = 1.25(M_{DC}) + 1.50(M_{DW}) + 1.75(M_{LL+IM})$

Split the (FWS + para DL) dead load moment (from Figure E18.15) into components:

$M_{DC} := 15.2$ kip-ft (moment from para DL)

$M_{DW} := 17.0$ kip-ft (moment from FWS)

$M_{LL+IM} = 234.7$ kip-ft

$M_u := 1.25 \cdot (15.2) + 1.50 \cdot (17.0) + 1.75 \cdot (234.7)$ $M_u = 455.2$ kip-ft

$b_{neg} = 30$ in (See E18-1.16.2)

$d_{neg} = 54.62$ in (See E18-1.16.2)

The coefficient of resistance, R_u, the reinforcement ratio, ρ, and req'd. bar steel area, A_s, are:

$R_u = 67.8$ psi $\rho = 0.00114$ $A_s = 1.87$ in^2

In E18-1.16.8, check to see if this bar area meets the minimum reinforcement criteria. Then the bar size and spacing can be selected.

E18-1.16.7 Shear Check of Slab at the Pier

Check the shear (reaction) in the slab at the pier, using Strength I Limit State.

Due to the geometry and loading, stirrups are generally not required or recommended.

Looking at E18-1.2: $\eta_i := 1.0$

and from Table E18.1: $\gamma_{DCmax} := 1.25$ $\gamma_{DWmax} := 1.50$ $\gamma_{LLstr1} := 1.75$ $\phi_v := 0.9$

$Q_i = V_{DC}, V_{DW}, V_{LL+IM}$ **LRFD [3.6.1.2, 3.6.1.3.3]**; shear (reactions) due to applied loads as stated in E18-1.2

$Q = V_u = \eta_i\,[\gamma_{DCmax}(V_{DC}) + \gamma_{DWmax}(V_{DW}) + \gamma_{LLstr1}(V_{LL+IM})]$

$= 1.0\,[1.25(V_{DC}) + 1.50(V_{DW}) + 1.75(V_{LL+IM})]$

$V_r = \phi_v \cdot V_n$

Therefore: $V_u \le V_r$ (Limit States Equation)

$V_u = 1.25(V_{DC}) + 1.50(V_{DW}) + 1.75(V_{LL+IM}) \le \phi_v V_n = V_r$

Find the dead load reactions at the Pier:

From the computer analysis, for a one foot design width:

V_{DC1} = reaction from (DC_{slab}) + ($DC_{1/2"WS}$) = 12.4 kip/ft

V_{DC2} = reaction from (DC_{para}) = 0.9 kip/ft

Therefore, total reaction (V_{DC}) from these loads across the slab width is:

$V_{DC} := (12.4 + 0.9)\cdot 42.5$ $\boxed{V_{DC} = 565.3}$ kips

V_{DW} = reaction from (DW_{FWS}) future wearing surface = 1.0 kip/ft

Therefore, total reaction (V_{DW}) from this load across the slab width is:

$V_{DW} := 1.0\cdot(42.5)$ $\boxed{V_{DW} = 42.5}$ kips

Find the live load reaction at the Pier:

For live load, use (3) design lanes **LRFD [3.6.1.1.1]** and multiple presence factor (m = 0.85) **LRFD [3.6.1.1.2]**.

From E18-1.16.2: Design Truck Reaction= 91.64 $\frac{\text{kip}}{\text{truck}}$ (for one lane)

Design Lane Load Reaction= 35.1 $\frac{\text{kip}}{\text{lane}}$ (for one lane)

Therefore, total reaction (V_{LL+IM}) from these loads is:

V_{LL+IM} = (91.64 + 35.1)(3 design lanes)(0.85) $\boxed{V_{LL+IM} = 323.2}$ kips

$V_u := 1.25\cdot(565.3) + 1.50\cdot(42.5) + 1.75\cdot(323.2)$ $\boxed{V_u = 1336}$ kips

Check for shear (two-way action): **LRFD [5.13.3.6.3]**

$$V_r = \phi_v \cdot V_n = \phi_v \cdot \left(0.063 + \frac{0.126}{\beta_c}\right) \cdot \sqrt{f'_c} \cdot (b_o) \cdot (d_v) \le \phi_v \cdot (0.126) \cdot \sqrt{f'_c} \cdot (b_o) \cdot (d_v)$$

Where:

β_c = ratio of long side to short side of the rectangle through which reaction force is transmitted
$\approx$ 41.71 ft. / 2.5 ft. = 16.7

d_v = effective shear depth = dist. between resultant tensile & compressive forces
$\approx$ 24 in.

b_o = perimeter of the critical section
$\approx$ 1109 in.

Therefore, $V_r := \phi_v \cdot \left(0.063 + \frac{0.126}{\beta_c}\right) \cdot \sqrt{f'_c} \cdot (b_o) \cdot d_v$ $\boxed{V_r = 3380}$ kips

but $\le \phi_v \cdot 0.126 \cdot \sqrt{f'_c} \cdot (b_o) \cdot d_v = 6036$ kips

Therefore, V_u = 1336 kips < V_r = 3380 kips <u>O.K.</u>

Note: Shear check and shear reinforcement design for the pier cap is not shown in this example. Also crack control criteria, minimum reinforcement checks, and shrinkage and temperature reinforcement checks are not shown for the pier cap.

E18-1.16.8 Minimum Reinforcement Check for Transverse Slab Member

Check the negative moment reinforcement (at interior column) for minimum reinforcement criteria.

The amount of tensile reinforcement shall be adequate to develop a factored flexural resistance (M_r), or moment capacity, at least equal to the lesser of: **LRFD [5.7.3.3.2]**

M_{cr} (or) $1.33M_u$

from E18-1.7.1.4, $M_{cr} = 1.1(f_r)\frac{I_g}{c}$

Where:

$f_r = 0.24\sqrt{f'_c}$ = modulus of rupture (ksi) **LRFD [5.4.2.6]**

$f_r = 0.24\sqrt{4}$ $\boxed{f_r = 0.48}$ ksi

h = pier cap depth + D_{haunch} (section depth) $\boxed{h = 58}$ in

b_{cap} = pier cap width $\boxed{b_{cap} = 30}$ in

$I_g := \frac{1}{12} \cdot b_{cap} \cdot h^3$ (gross moment of inertia) $\boxed{I_g = 487780}$ in^4

$c := \frac{h}{2}$ (section depth/2) $\boxed{c = 29}$ in

$M_{cr} = \frac{1.1 f_r \cdot (I_g)}{c} = \frac{1.1 \cdot 0.48 \cdot (487780)}{29(12)}$ $\boxed{M_{cr} = 740.1}$ kip-ft

$1.33 \cdot M_u = 605.4$ kip-ft , where M_u was calculated for Strength Design in E18-1.16.6.1 and (M_u = 455.2 kip-ft)

1.33 M_u controls because it is less than M_{cr}

Recalculating requirements for (New moment = $1.33 \cdot M_u$ = 605.4 kip-ft)

$\boxed{b_{neg} = 30}$ in (See E18-1.16.2)

$\boxed{d_{neg} = 54.62}$ in (See E18-1.16.2)

Calculate R_u, coefficient of resistance:

$R_u = \frac{M_u}{\phi_f \cdot (b_{neg}) \cdot d_{neg}^2}$ $R_u := \frac{605.4 \cdot (12) \cdot 1000}{0.9(30) \cdot 54.62^2}$ $\boxed{R_u = 90.2}$ psi

Solve for ρ, reinforcement ratio, using Table 18.4-3 (R_u vs ρ) in 18.4.13;

$\rho := 0.00152$

$A_s = \rho \cdot (b_{neg}) \cdot d_{neg}$ $A_s := 0.00152 \cdot (30) 54.62$ $\boxed{A_s = 2.49}$ in^2

Place this reinforcement in a width, centered over the pier, equal to 1/2 the center to center column spacing or 8 feet, whichever is smaller. Therefore, width equals 6.5 feet.

Therefore, 2.49 in^2/6.5 ft. = 0.38 in^2/ft. Try <u>#5 at 9" c-c spacing</u> for a 6.5 ft. transverse width over the pier. This will provide (A_s = 2.79 in^2) in a 6.5 ft. width.

Calculate the depth of the compressive stress block

Assume $f_s = f_y$ (See 18.3.3.2.1) ; for f'_c = 4.0 ksi : $\alpha_1 := 0.85$ and $\beta_1 = 0.85$

$a = \frac{A_s \cdot f_y}{\alpha_1 \cdot f'_c \cdot b_{neg}}$ $a := \frac{2.79 \cdot (60)}{0.85 \cdot (4.0) \cdot 30}$ $\boxed{a = 1.64}$ in

If $\frac{c}{d_s} \le 0.6$ for (f_y = 60 ksi) **LRFD [5.7.2.1]**, then reinforcement has yielded and the assumption is correct.

$\beta_1 := 0.85$ $\quad c := \frac{a}{\beta_1}$ $\quad \boxed{c = 1.93}$ in

$d_s := d_{neg}$ $\quad \boxed{d_s = 54.62}$ in

$\frac{c}{d_s} = 0.04 < 0.6$ therefore, the reinforcement will yield.

$$M_r = 0.90 \cdot A_s \cdot f_y \cdot \left(d_s - \frac{a}{2}\right)$$

$$M_r := 0.9 \cdot (2.79) \cdot 60.0 \cdot \left(\frac{54.62 - \frac{1.64}{2}}{12}\right) \qquad \boxed{M_r = 675.5} \text{ kip-ft}$$

Therefore, 1.33(M_u) = 605.4 kip-ft < M_r = 675.5 kip-ft O.K.

E18-1.16.9 Crack Control Check for Transverse Slab Member

Check the negative moment reinforcement (at interior column).

This criteria shall be checked when tension (f_T) in the cross-section exceeds 80% of the modulus of rupture (f_r), specified in **LRFD [5.4.2.6]**.

Following the procedure in E18-1.7.1.3, using Service I Limit State:

$\boxed{f_r = 0.48}$ ksi $\quad \boxed{f_{r80\%} = 0.38}$ ksi $\quad \boxed{c = 29}$ in $\quad \boxed{I_g = 487780}$ in^4

$M_s = 1.0(M_{DC}) + 1.0(M_{DW}) + 1.0(M_{LL+IM})$

Using same moments selected for Strength Design in E18-1.16.6, at (interior column), provides

M_{DC} = 15.2 kip-ft $\quad M_{DW}$ = 17.0 kip-ft $\quad M_{LL+IM}$ = 234.7 kip-ft

$M_s := 1.0 \cdot (15.2) + 1.0(17.0) + 1.0 \cdot (234.7)$ $\quad \boxed{M_s = 266.9}$ kip-ft

$f_T = \frac{M_s \cdot c}{I_g}$ $\quad f_T := \frac{266.9 \cdot (29) \cdot 12}{487780}$ $\quad \boxed{f_T = 0.19}$ ksi

f_T =0.19 ksi < 80% f_r = 0.38 ksi; therefore, crack control criteria check is not req'd.

Therefore, crack control criteria for transverse slab reinforcement is O.K.

Use: #5 at 9" c-c spacing for a 6.5 ft. transverse width over the pier.

The transverse slab member reinforcement (top/bottom), and the remainder of the transverse reinforcement is shown in Figure E18.21.

E18-1.17 Shrinkage and Temperature Reinforcement Check

Check shrinkage and temperature reinforcement criteria for the remaining transverse reinforcement.

E18-1.17.1 Transverse Slab Member and Other Transverse Reinforcement

Following the procedure in E18-1.13.1:

All transverse slab member reinforcement (top/bottom) and remainder of transverse reinforcement in slab exceeds A_s req'd. for each face, and does not exceed maximum spacing.

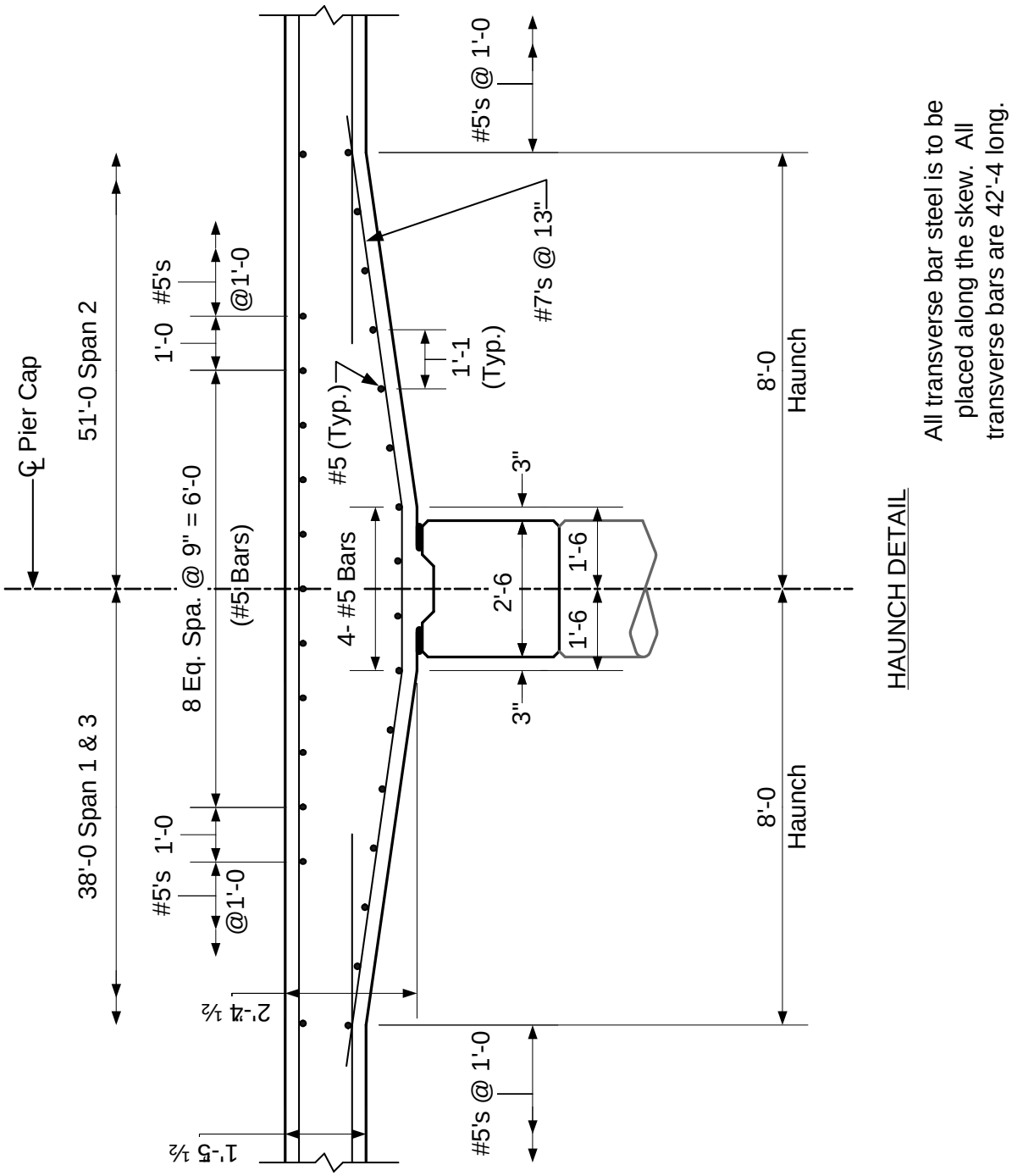

Figure E18.21

Haunch Detail

E18-1.18 Check for Uplift at Abutments

Check for uplift at the abutments, using Strength I Limit State **LRFD [C3.4.1, 5.5.4.3, 14.6.1]**

The maximum uplift at the abutments from live load is obtained from the following influence line and shall be the largest caused by live loads (LL#1 or LL#2) in each design lane (See Figure E18.22). See Table E18.2 and E18.3 in E18-1.4 for description of live loads and dynamic load allowance (IM).

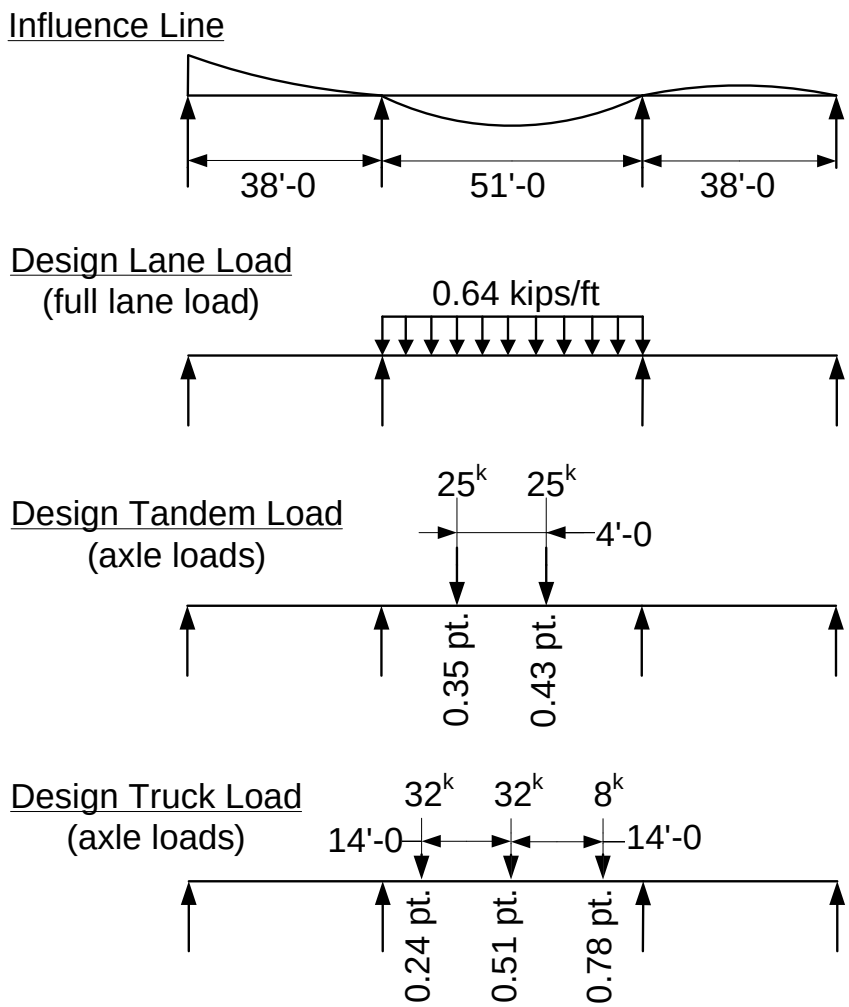

Figure E18.22

Influence Line and Live Loads for Uplift

Tables of influence line coefficients are used to calculate live load reactions at the abutment. The reactions per lane, before applying the dynamic load allowance (IM) are:

Design Lane Load Reaction = (0.1206)(0.64)(38.0) = 2.9 kips

Design Truck Reaction = (0.1290 + 0.1360)(32) + (0.060)(8) = 9.0 kips

Design Tandem Reaction = (0.149 + 0.148)(25) = 7.4 kips

The largest live load reaction is from: Design Truck + Design Lane Load (LL#2)

The dynamic load allowance (IM) is 33% ; (applied to Design Truck)

Therefore, total live load reaction (R_{LL+IM}) from these loads is:

R_{LL+IM} = 9.0(1.33) + 2.9 = 14.87 kips (for one lane)

Find the dead load reactions at the abutment:

From the computer analysis, for a <u>one foot design width</u>:

R_{DC1} = reaction from (DC_{slab}) + ($DC_{1/2"WS}$) = 2.8 kip/ft

R_{DC2} = reaction from (DC_{para}) = 0.3 kip/ft

Therefore, total dead load reaction (R_{DC}) from these loads across the slab width is:

$R_{DC} := (2.8 + 0.3) \cdot 42.5$ $\boxed{R_{DC} = 131.75}$ kips

Total dead load reaction ignores (DW_{FWS}) because it reduces uplift.

Check uplift for Strength I Limit State:

Looking at E18-1.2: $\eta_i := 1.0$ and Table E18.1: $\gamma_{DCmin} := 0.90$ $\gamma_{LLstr1} := 1.75$

Dead Load Reaction at Abutments = $\gamma_{DCmin}(R_{DC})$ = 0.90(131.75) = <u>118.6 kips</u>

Uplift from Live Load = $\gamma_{LLstr1}(R_{LL+IM})$(# lanes loaded)(m)

Use (3) design lanes **LRFD [3.6.1.1.1]** and multiple presence factor (m = 0.85) **LRFD [3.6.1.1.2]**

Uplift from Live Load = 1.75(14.87)(3 design lanes)(0.85) = <u>66.4 kips</u>

Therefore, Uplift = 66.4 kips < Dead Load Reaction = 118.6 kips <u>O.K.</u>

Because dead load reaction at abutments exceeds uplift from live load, the existing dowels (#5 at 1'-0 spa.) are adequate. (See Standard 12.01)

E18-1.19 Deflection Joints and Construction Joints

Locate deflection joints for concrete slab structures according to Standard 30.07. Refer to Standards 18.01/18.02 for recommended construction joint guidelines.

Note: See Standard 18.01/18.02 for required notes and other details

This page intentionally left blank.