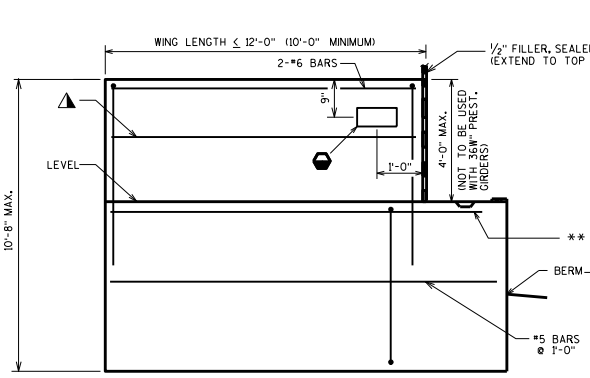

WING WITHOUT PILE ELEVATION

(FRONT FACE)

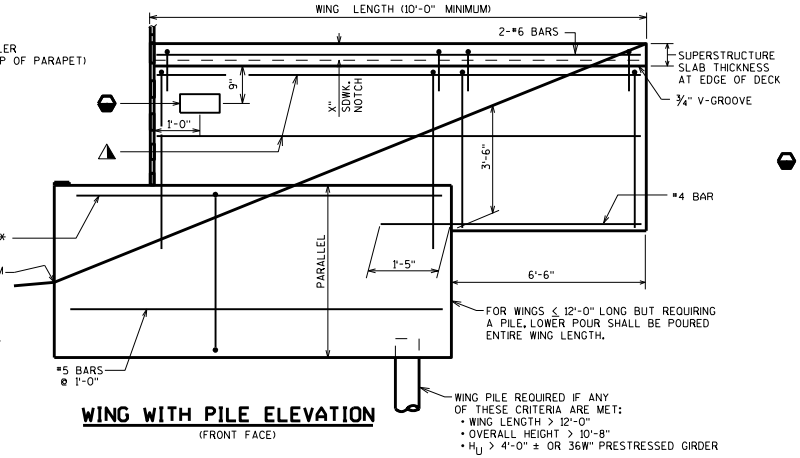

WING WITH PILE ELEVATION

(FRONT FACE)

DESIGNER NOTES

LENGTH OF A1 BARS SHALL BE ≥ TO WING LENGTH.

WING WITH PILE & WING WITHOUT PILE CAN BE USED FOR EITHER SIDEWALK OR SLOPED FACE PARAPETS. THE TYPE OF WING TO USE IS BASED ONLY ON THE WING HEIGHT AND WING LENGTH LIMITATIONS SHOWN.

LAP LENGTH FOR HORIZONTAL BARS SHALL BE BASED ON A "CLASS C" TOP TENSION LAP SPLICE.

WING BARS AND DOWEL BARS SHALL BE EPOXY COATED.

NAME PLATE (ONLY FOR TYPE "F", "W" AND "M" OR TIMBER RAIL AS SHOWN ON STANDARD 30.24). LOCATE NAME PLATE ON FIRST RIGHT WING TRAVELING UP STATION.

SEAL ALL EXPOSED HORIZONTAL AND VERTICAL SURFACES OF ½" FILLER WITH NON-STAINING GRAY NON-BITUMINOUS JOINT SEALER. (1" DEEP AND HOLD ⅛" BELOW SURFACE OF CONCRETE). EXTEND SEALER 3" BELOW GUTTER LINE AT INSIDE FACE.

LRFD DESIGN LOADS

LIVE LOAD = 2'-0" SURCHARGE
LOAD FACTORS:
γ_{pDC} = 1.25
γ_{pEH} = 1.50
γ_{pEV} = 1.35
γ_{LS} = 1.75

EXPOSURE CLASS 2, γ_E = 0.75
fy = 60,000 P.S.I.
f'c = 3,500 P.S.I.
HORIZ. EARTH LOAD BASED ON: 35 P.C.F. EQUIV. FLUID UNIT WEIGHT OF SOIL

WING LENGTH	WING HEIGHT 8'-6"	10'-0"	11'-6"	13'-0"	BARS
10'-0"	*6-#6's	*6-#6's	6-#5's		W
	*7-#8's	*7-#8's	6-#5's		A1
12'-0"	*6-#6's	*7-#6's	7-#5's	7-#6's	W
	*7-#8's	*7-#8's	6-#7's	7-#7's	A1
16'-0"	7-#6's	8-#6's	7-#7's	8-#7's	W
	5-#8's	6-#8's	7-#8's	8-#8's	A1
20'-0"	7-#7's	7-#8's	8-#8's	8-#9's	W
	6-#9's	7-#9's	7-#10's	8-#10's	A1
24'-0"	8-#8's	9-#8's	9-#9's	9-#10's	W
	7-#9's	8-#9's	8-#10's	9-#10's	A1

* WING WITHOUT PILE VALUES SHOWN. (FOR WING WITH PILE THAT HAS WING LENGTH IN THIS REGION, USE VALUES FOR 11'-6" WING HEIGHT.)

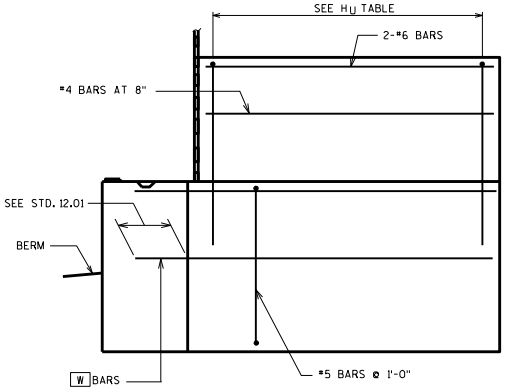

WING WITHOUT PILE ELEVATION

(BACK FACE)

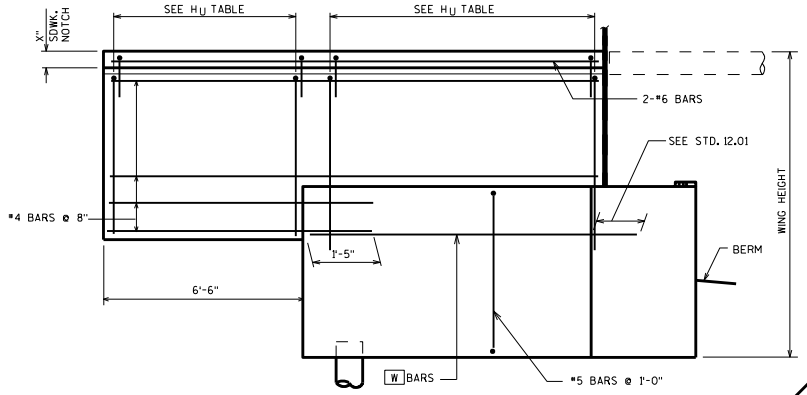

WING WITH PILE ELEVATION

(BACK FACE)

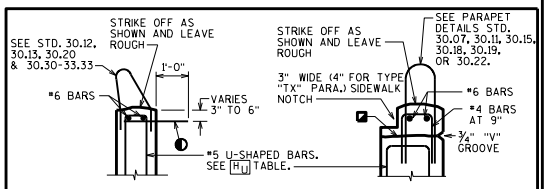

TYPE "LF", "HF", "51F" OR "...SS" PARAPETS

CONC. PARAPET AND SIDEWALK

#4 DOWELS (COATED) 2'-0" LONG AT 1'-0" ALONG ENTIRE WING LENGTH. PLACE IN WING ADJACENT TO SURFACE DRAIN APRON ONLY.

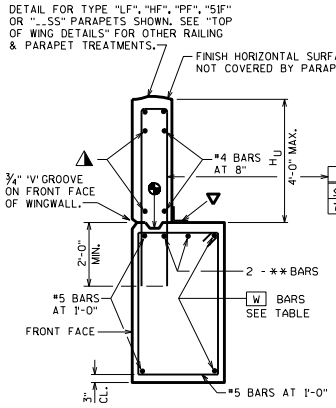

H_U	STEEL RAIL	CONC. RAIL
≤ 7'-0"	#6 @ 9"	#5 @ 9"
7'-0"-9'-0"	#6 @ 9"	#5 @ 6"

WING WITHOUT PILE SECTION

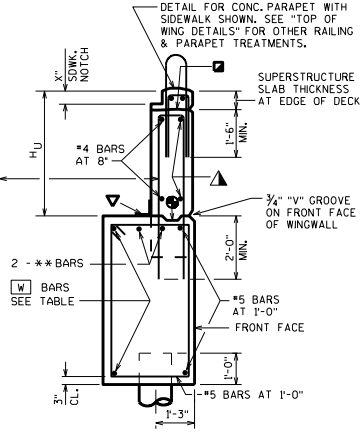

WING WITH PILE SECTION

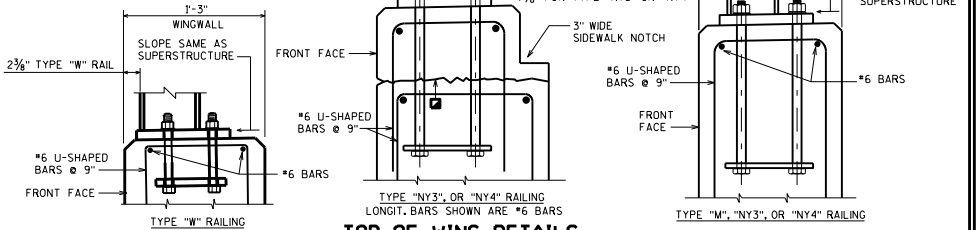

TYPE "W" RAILING

TYPE "NY3", OR "NY4" RAILING
LONGIT. BARS SHOWN ARE #6 BARS

TYPE "M", "NY3", OR "NY4" RAILING

TOP OF WING DETAILS

(TYP. FOR A3 ABUTMENT WINGS ALSO)

CONSTRUCTION JOINT. LEAVE ROUGH. REQUIRED FOR PRESTRESSED CONCRETE SUPERSTRUCTURES. OPTIONAL FOR OTHERS. POUR CONCRETE ABOVE THIS JOINT AFTER DECK IS IN PLACE. IF JOINT IS USED, UTILIZE RUBBERIZED MEMBRANE WATERPROOFING (COST INCIDENTAL TO BID ITEM "CONCRETE MASONRY BRIDGES").

18" RUBBERIZED MEMBRANE WATERPROOFING. SEAL ALL HORIZONTAL AND VERTICAL JOINTS ON BACKFACE.

USE #4 BARS @ 1'-6" FOR WINGWALL WIDTH = 1'-3" USE #4 BARS @ 1'-4" FOR WINGWALL WIDTH = 1'-6".

** BARS TO BE SAME SIZE AS "W" BARS.

OPTIONAL CONST. JOINT FORMED BY BEVELED 2" × 6" KEYWAY WITH MEMBRANE ON BACKFACE.

ABUTMENT TYPE A1

BUREAU OF STRUCTURES

APPROVED: Bill Oliva

DATE: 1-17

STANDARD 12.02