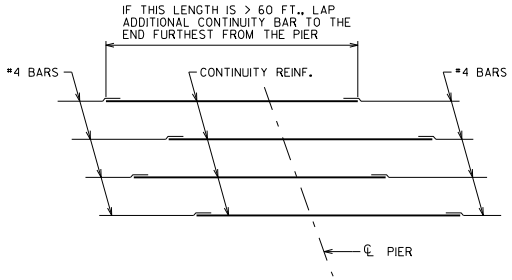

PLAN VIEW OF DECK CONTINUITY REINFORCEMENT FOR PRESTRESSED GIRDER BRIDGES

(SHOWING TYPICAL BAR SPACING FROM CHAPTER 17 TABLES)

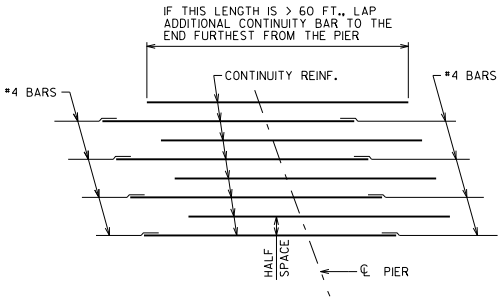

PLAN VIEW OF DECK CONTINUITY REINFORCEMENT FOR PRESTRESSED GIRDER BRIDGES SHOWING HALF-SPACES

(SHOWING TYPICAL BAR SPACING FROM CHAPTER 17 TABLES + HALF-SPACE)

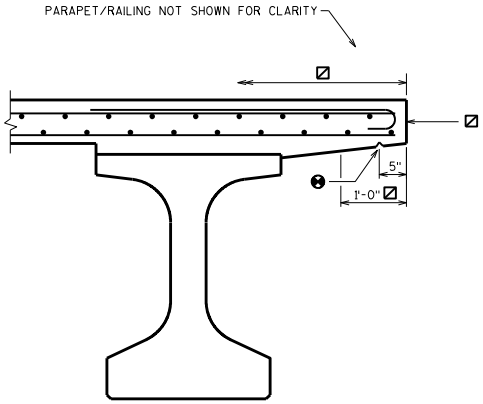

CROSS SECTION THRU EDGE OF DECK

(SHOWING DRIP GROOVE FOR ALL PARAPET AND RAILINGS, AND PROTECTIVE SURFACE TREATMENT FOR OPEN RAILINGS)

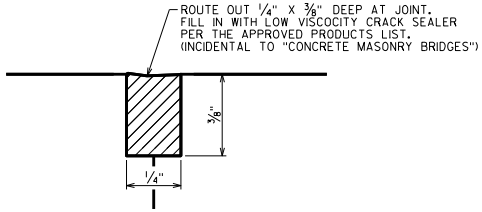

LONGITUDINAL CONSTRUCTION JOINT DETAIL

DESIGNER NOTES

DETAIL REQUIRED WHEN WIDTH OF DECK EXCEEDS 90 FEET FOR GIRDER SUPERSTRUCTURES AND 52 FEET FOR SLAB SUPERSTRUCTURES. DETAIL SHOULD BE USED FOR STAGED CONSTRUCTION AND FOR OTHER COLD JOINT APPLICATIONS WITHIN THE DECK. OPTIONAL (CONTRACTOR) JOINTS ARE TO BE APPROVED BY THE ENGINEER.

JOINTS SHOULD BE PLACED AT LEAST 6 INCHES FROM THE EDGE OF THE TOP FLANGE OF THE GIRDER AND PREFERABLY LOCATED BENEATH THE MEDIAN OR PARAPET. AVOID PLACING NEAR WHEEL PATHS (PLACE AT LANE LINES OR IN THE MIDDLE OF THE LANE).

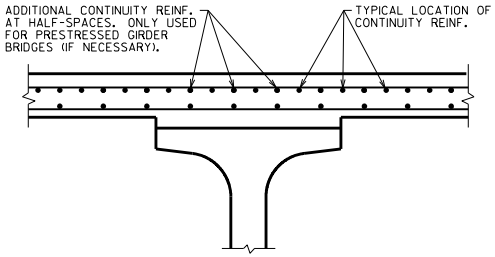

CROSS SECTION THRU DECK

(SHOWING TOP LONGIT. REINF. LOCATION RELATIVE TO BOTTOM LONGIT. REINF.)

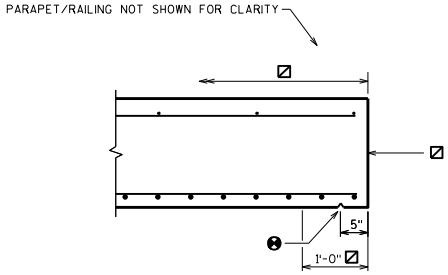

CROSS SECTION THRU EDGE OF SLAB

(SHOWING DRIP GROOVE FOR ALL PARAPET AND RAILINGS, AND PROTECTIVE SURFACE TREATMENT FOR OPEN RAILINGS)

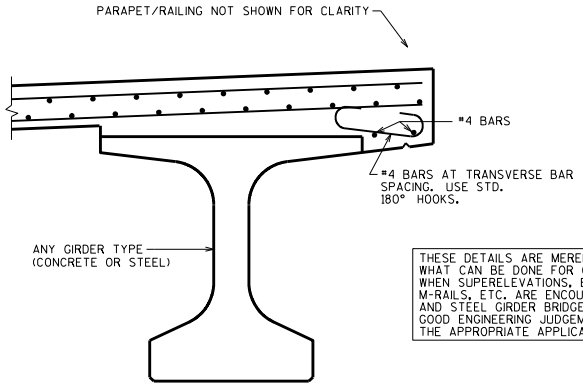

CROSS SECTION THRU EDGE OF DECK

(SHOWING ADDITIONAL OVERHANG REINFORCEMENT)

THESE DETAILS ARE MERELY REPRESENTATIVE OF WHAT CAN BE DONE FOR OVERHANG REINFORCING WHEN SUPERELEVATIONS, EXCESSIVE HAUNCHES, M-RAILS, ETC. ARE ENCOUNTED ON PRESTRESSED AND STEEL GIRDER BRIDGE DECKS. USE GOOD ENGINEERING JUDGEMENT IN DETERMINING THE APPROPRIATE APPLICATION.

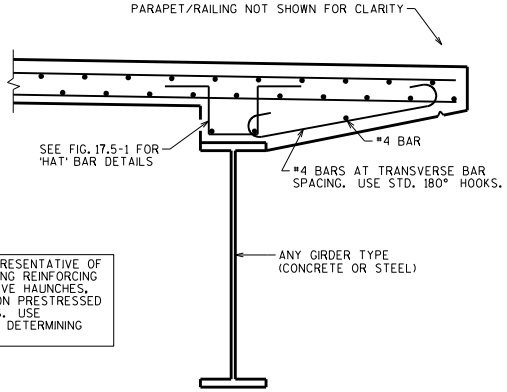

CROSS SECTION THRU EDGE OF DECK

(SHOWING ADDITIONAL OVERHANG REINFORCEMENT)

DESIGNER NOTES

❸ 3/4" V-GROOVE. TERMINATE 2'-0" FROM FRONT FACE OF EXPANSION ABUTMENTS, OR FIXED ABUTMENTS ON STEEL BEARINGS.

3/4" V-GROOVE. EXTEND V-GROOVE TO 6" FROM FRONT FACE OF ABUTMENT DIAPHRAGM FOR TYPE A1 FIXED AND SEMI-EXPANSION ABUTMENTS.

V-GROOVES ARE REQUIRED.

☒ FOR OPEN RAILINGS, COAT WITH "PROTECTIVE SURFACE TREATMENT" AS PER THE STANDARD SPECIFICATIONS. PROTECTIVE SURFACE TREATMENT TO BE APPLIED TO THE TOP AND EXTERIOR EXPOSED FACE OF WINGS, AND THE END 1'-0" OF THE FRONT FACE OF ABUTMENT.

NOTES

❸ 3/4" V-GROOVE REQ'D. EXTEND TO 2'-0" FROM F.F. OF ABUT.

3/4" V-GROOVE REQ'D. EXTEND TO 6" FROM F.F. OF ABUT. DIAPH.

☒ COAT WITH "PROTECTIVE SURFACE TREATMENT" AS PER THE STANDARD SPECIFICATIONS.

DECK AND SLAB DETAILS

STATE OF WISCONSIN
DEPARTMENT OF TRANSPORTATION
STRUCTURES DEVELOPMENT SECTION

APPROVED: Bill Oliva

DATE: 7-16

STANDARD 17.02