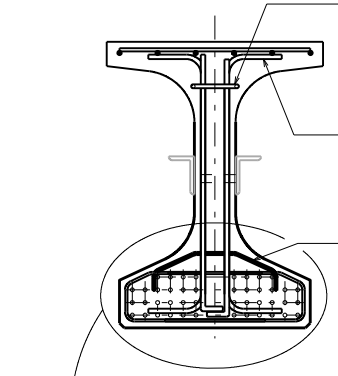

SECTION A-A

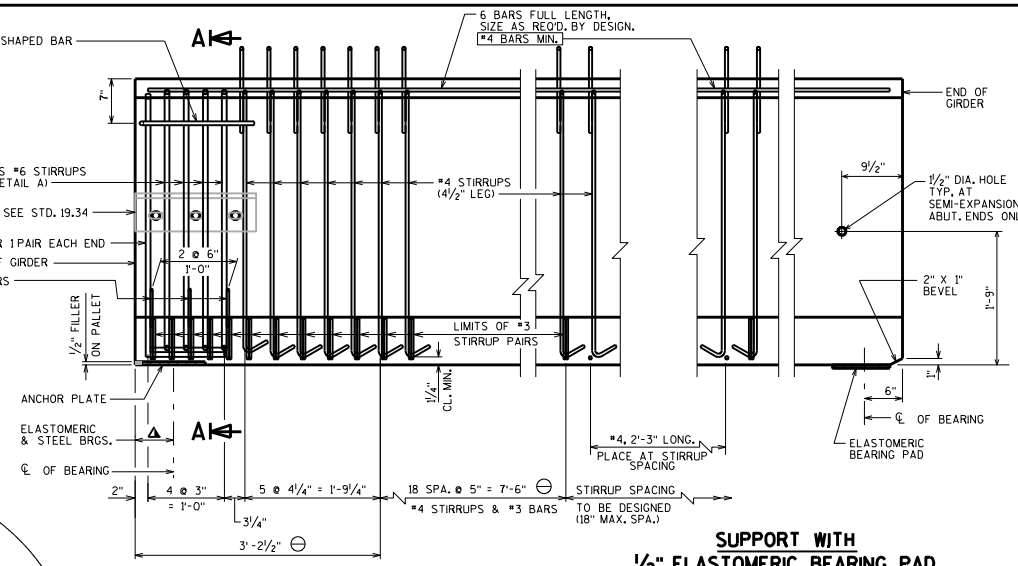

SUPPORT WITH STEEL OR ELASTOMERIC BRGS.

SUPPORT WITH 1/2" ELASTOMERIC BEARING PAD

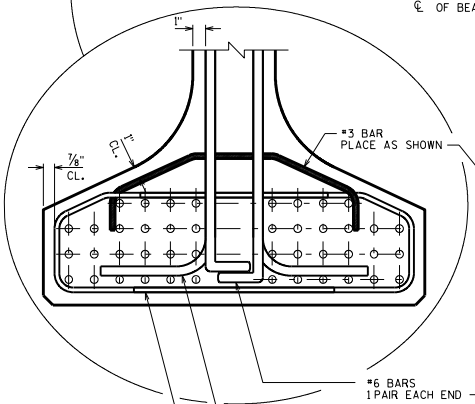

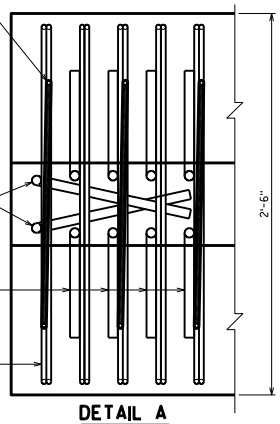

DETAIL A

BOTTOM FLANGE

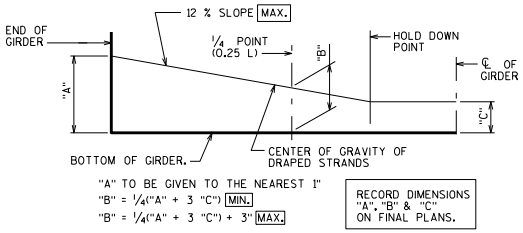

LOCATION OF DRAPED STRANDS

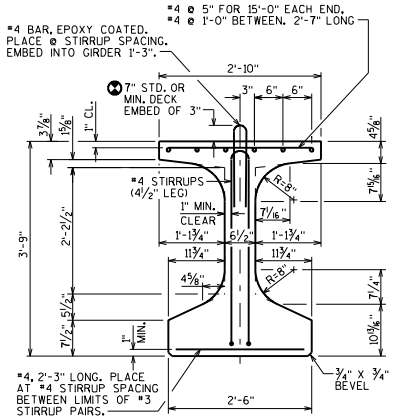

SECTION THRU GIRDER

STRANDS NOT SHOWN

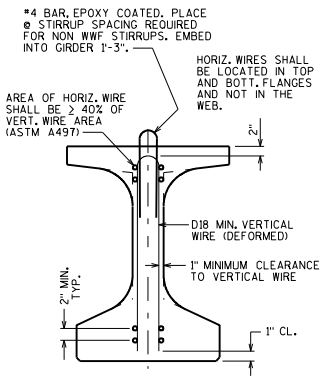

SECTION THRU GIRDER

SHOWING WELDED WIRE FABRIC (WWF) STIRRUPS ASTM A1064 (FY = 70 KSI)

NOTES

TOP OF GIRDER TO BE ROUGH FLOATED AND BROOMED TRANSVERSELY, EXCEPT THE OUTSIDE 8" OF GIRDER, WHICH SHALL RECEIVE A SMOOTH FINISH. AN APPROVED CONCRETE SEALER SHALL BE APPLIED TO ALL SMOOTH SURFACES INCLUDING THE OUTSIDE 8" OF THE TOP FLANGE.

DO NOT APPLY CONCRETE SEALER OR EPOXY TO SURFACES RECEIVING APPLICATION OF CONCRETE STAINING.

THE GIRDERS SHALL BE PROVIDED WITH A SUITABLE LIFTING DEVICE FOR HANDLING AND ERECTING THE GIRDERS. SEE SECTION 503.3.3 OF STANDARD SPECIFICATIONS FOR GUIDANCE.

STRANDS SHALL BE FLUSH WITH END OF GIRDER. FOR GIRDER ENDS EMBEDDED COMPLETELY IN CONCRETE, END OF STRANDS SHALL BE COATED WITH NON-BITUMINOUS JOINT SEALER. FOR GIRDER ENDS THAT ARE FINALLY EXPOSED, COAT THE GIRDER ENDS, EXPOSED STRAND ENDS AND ALL NON-BONDING SURFACES WITHIN 2 FEET OF THE GIRDER ENDS WITH A NON-PIGMENTED EPOXY CONFORMING TO AASHTO M-235 TYPE III, GRADE 2, CLASS B OR C. THE EPOXY SHALL BE APPLIED AT LEAST 3 DAYS AFTER MOIST CURING HAS CEASED AND PRIOR TO THE APPLICATION OF THE SEALER.

ALL GIRDERS SHALL BE CAST FULL LENGTH AS SHOWN.

SPACING SHOWN FOR #4 STIRRUPS IS FOR GRADE 60 REINFORCEMENT.

AN ALTERNATE EQUIVALENT OF WELDED WIRE FABRIC (WWF) ASTM A497 MAY BE SUBSTITUTED FOR THE STIRRUP REINFORCEMENT SHOWN, UPON APPROVAL OF THE STRUCTURES DEVELOPMENT SECTION.

PRESTRESSING STRANDS SHALL BE (DIA.)-7-WIRE LOW-RELAXATION STRANDS WITH AN ULTIMATE STRENGTH OF 270,000 PSI.

DESIGNER NOTES

BID ITEM SHALL BE "PRESTRESSED GIRDER TYPE I 45W-INCH".

SPECIFY CONCRETE STRENGTH AS REQUIRED BY DESIGN FROM A MINIMUM OF 6,000 PSI TO A MAX. OF 8,000 PSI. MAXIMUM RELEASE STRENGTH IS 6800 PSI. USE 0.6" DIA. STRAND FOR ALL PATTERNS. THE MAX. NUMBER OF DRAPED 0.6" DIA. STRANDS IS 8.

REINFORCEMENT IN STANDARD END SECTION OF THE GIRDER IS BASED ON THE STANDARD STRAND PATTERNS LISTED ON STANDARD 19.14 AND THE SPAN LENGTHS SHOWN IN TABLE 19.3-1. USING DIFFERENT STRAND PATTERNS OR LONGER SPANS WILL REQUIRE A COMPLETE DESIGN OF THIS REINFORCEMENT, WHICH REQUIRES PRIOR APPROVAL FROM THE BUREAU OF STRUCTURES.

▲ VARIES FOR ELASTOMERIC BRGS. (STD. 27.07) AND STEEL BRGS. (STD. 27.09)

⊖ DETAIL TYPICAL AT EACH END

✖ THE DESIGN ENGINEER DETERMINES THIS VALUE BASED ON 2" MIN. HAUNCH AT EDGE OF GIRDER, X-SLOPE, PROFILE GRADE LINE AND CALCULATED RESIDUAL GIRDER CAMBER, INCLUDING THE CAMBER MULTIPLIER OF 1.4. THIS VALUE CAN VARY AND SHOULD BE GIVEN FOR EACH 1/3 OF THE GIRDER LENGTH. PROVIDE VALUES THAT MAINTAIN 3" MIN. DECK EMBEDMENT AND 2 1/2" CLEAR FROM TOP OF DECK WHILE ACCOUNTING FOR ±3/4" VARIANCE IN ACTUAL CAMBER VERSUS THE CALCULATED RESIDUAL CAMBER.

PROVIDE STIRRUP SPACING THAT IS SYMMETRICAL ABOUT THE C/L OF GIRDER.

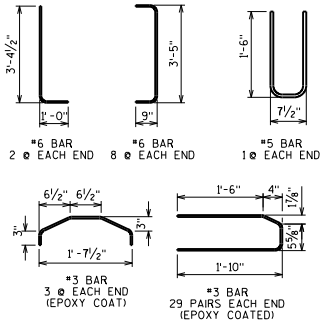

45W" PRESTRESSED GIRDER DETAILS

BUREAU OF STRUCTURES

APPROVED: Bill Oliva

DATE: 1-17

STANDARD 19.13