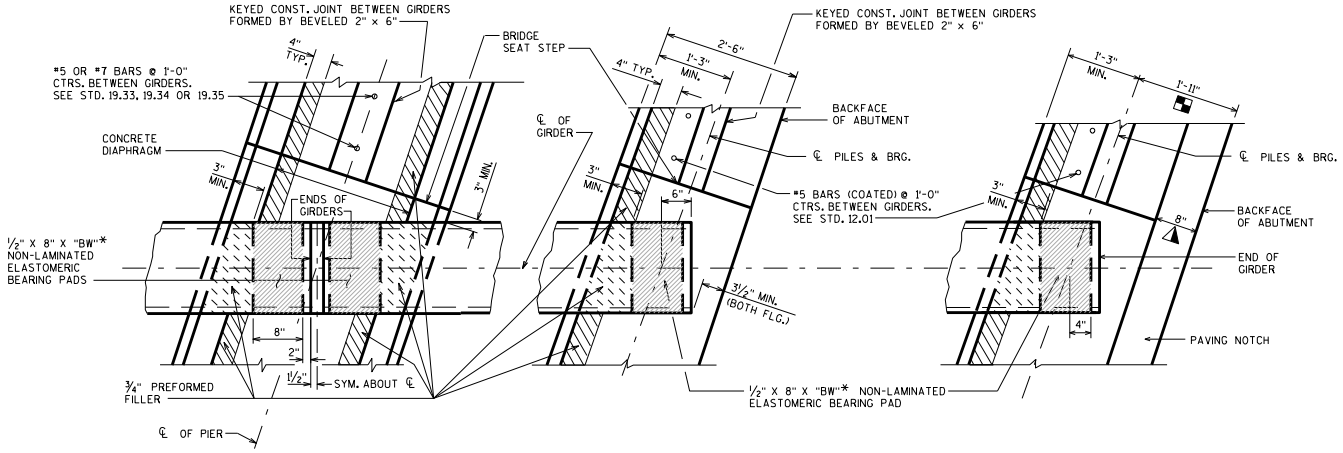

AT PIER

AT ABUTMENT

ABUTMENT: TYPE "A1 FIXED" AND "A5" W/O PAVING NOTCH

AT ABUTMENT

ABUTMENT: TYPE "A1 FIXED" AND "A5" WITH PAVING NOTCH.

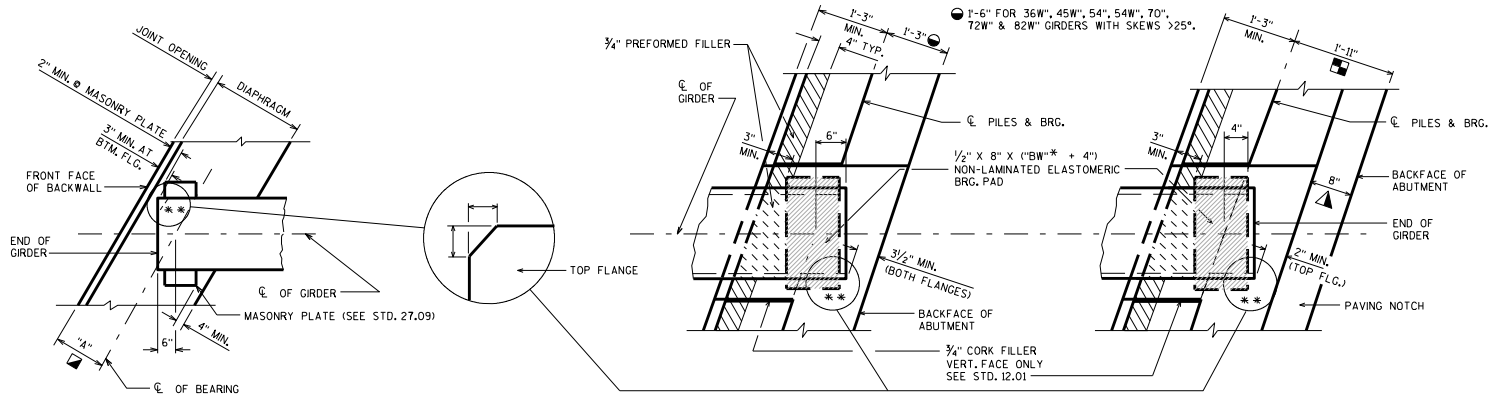

PLAN AT ABUTMENT

ABUTMENT: TYPE "A3" OR "A4"
SEE TABLE FOR MIN. "A" VALUES REQ'D. TO MEET MIN. CLEARANCE CRITERIA ABOVE.

** FORM-OUT CORNER OF TOP FLANGE ON 36W", 45W", 54W", 70", 72W" & 82W" PRESTRESSED GIRDERS TO MEET MIN. CLEARANCE REQ'D.

AT ABUTMENT

ABUTMENT: TYPE "A1 SEMI-EXP." W/O PAVING NOTCH

AT ABUTMENT

ABUTMENT: TYPE "A1 SEMI-EXP." WITH PAVING NOTCH.

USE 2'-3" WITH A STRUCTURAL APPROACH SLAB (STD. 12.10)

PAVING NOTCH IS 1'-0" WIDE IF STRUCTURAL APPROACH SLAB (STD. 12.10) IS USED.

MIN. "A" DIMENSION IN INCHES FOR A3 AND A4 ABUTMENTS WITH STEEL BEARINGS AS SHOWN ON STD. 27.09.

"A" DIMENSION BASED ON BOTTOM FLANGE CLEARANCE IS CALCULATED USING 6" OFFSET FROM ℄ BRG. TO END OF GIRDER AND 3" MIN. OFFSET BETWEEN FLANGE AND BACKWALL TO ACCOMMODATE EXPANSION. IF CONDITIONS REQUIRE OFFSETS OTHER THAN THESE, THE "A" DIMENSION MUST BE CALCULATED.
"A" DIMENSION BASED ON MASONRY PLATE CLEARANCE IS CALCULATED ASSUMING A 10" LONG PLATE. IF LONGER PLATE IS REQUIRED, RECALCULATE "A".

SKEW ANGLE °	GIRDER DEPTHS									
	28"	36"	36W"	45"	45W"	54"	54W"	70"	72W"	82W"
0-5	12"	12"	12"	12"	12"	12"	12"	12"	12"	12"
> 5-15	12"	12"	13"	12"	13"	12.5"	13"	13"	13"	13"
> 15-25	12.5"	12.5"	15"	13"	15"	14"	15"	15"	15"	15"
> 25-35	(14")	(14")	(17.5")	(15")	(17.5")	(16.5")	(17.5")	16.5"	(17.5")	(17.5")
> 35-45	(15.5")	(15.5")	(20")	(17")	(20")	(18.5")	(20")	(18.5")	(20")	(20")
> 45-55	(17")	(17")	(21.5")	(18.5")	(21.5")	(20")	(21.5")	(20")	(21.5")	(21.5")

VALUES IN PARENTHESIS ARE CONTROLLED BY 2" CLR. CRITERIA AT EDGE OF MASONRY PLATE. VALUES MAY BE ADJUSTED IF MASONRY PLATE IS CLIPPED PER STANDARD 27.02.

PRESTRESSED GIRDER FLANGE WIDTH TABLE

GIRDER DEPTH	28"	36"	36W"	45"	45W"	54"	54W"	70"	72W"	82W"
TOP FLANGE WIDTH	18"	12"	34"	16"	34"	20"	48"	30"	48"	48"
BOTTOM FLANGE WIDTH "BW"*	18"	18"	30"	22"	30"	26"	30"	26"	30"	30"

DESIGNER NOTES

STANDARD DETAIL DRAWINGS FOR THE 45", 54" AND 70" CAN BE FOUND IN CHAPTER 40, BRIDGE REHABILITATION. THESE GIRDERS HAVE BEEN REPLACED WITH THE 45W", 54W" AND 72W" RESPECTIVELY AND ARE NO LONGER USED ON NEW CONSTRUCTION PROJECTS.

BEARING PAD DETAILS FOR PRESTRESSED CONCRETE GIRDERS

BUREAU OF STRUCTURES

APPROVED: Bill Oliva

DATE: 7-15

STANDARD 19.31