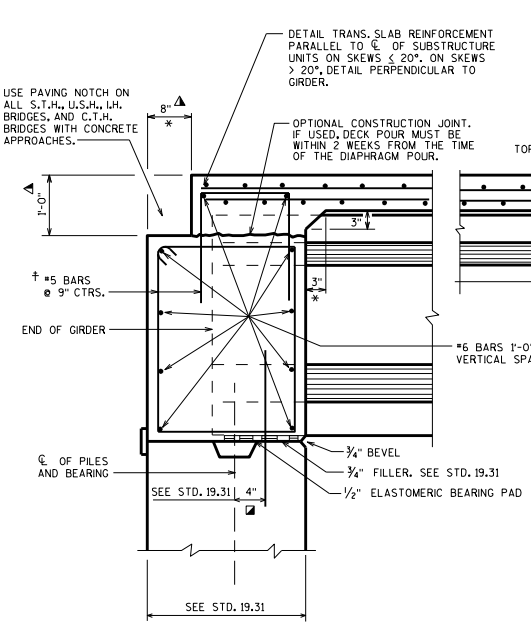

FIXED END FOR SKEWED AND SQUARE STRUCTURES

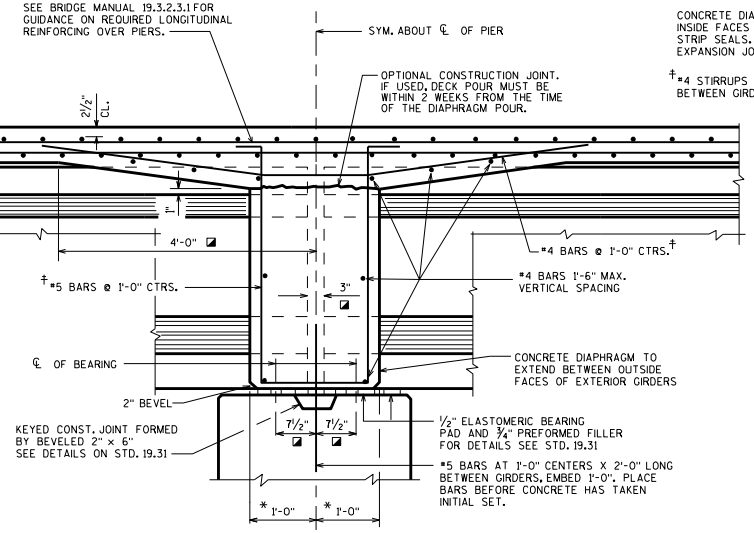

DIAPHRAGM AT ½" ELASTOMERIC BEARING

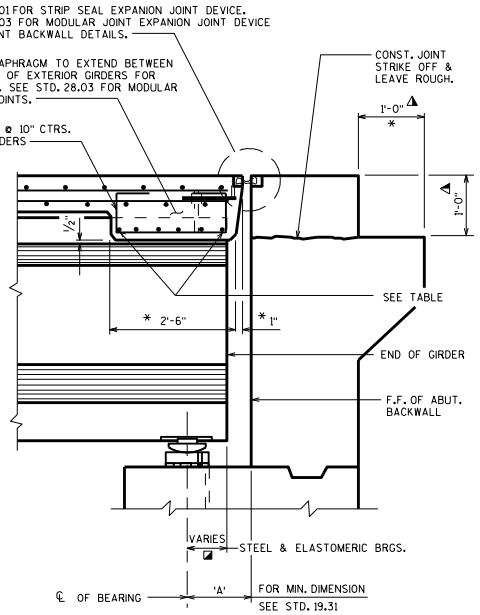

EXPANSION END

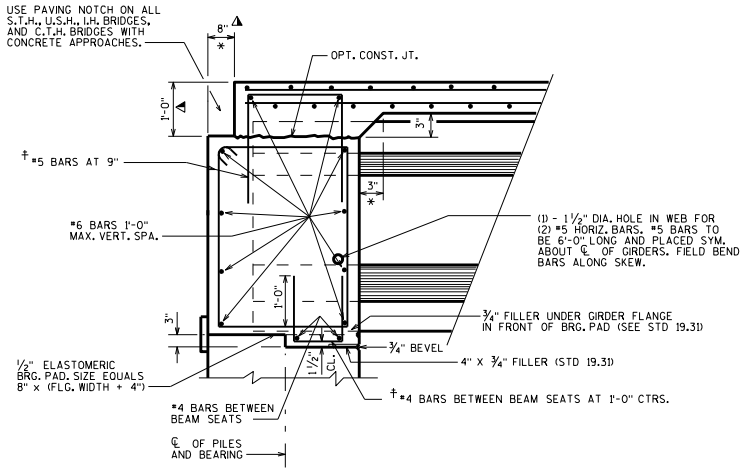

PRESTRESSED GIRDER WITH SEMI-EXPANSION SEAT

EXPANSION END DIAPHRAGM STEEL

DIAPHRAGM LENGTH (ALONG SKEW) BETWEEN GIRDERS (℄ TO ℄ OF GRDS.)	NO. OF BARS & BAR SIZE	
	28"	36"
≤ 8'-4"	6 - #6	6 - #6
> 8'-4" ≤ 11'-4"	6 - #8	6 - #7
> 11'-4" ≤ 14'-9"		6 - #8

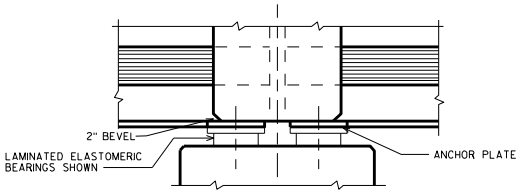

DIAPHRAGM AT STEEL OR ELASTOMERIC BEARINGS SECTION THRU DIAPHRAGM AT PIER

FOR STEEL BEARINGS, FORM DIAPHRAGM APPROXIMATELY ½" ABOVE BEARING KEEPER BARS

DESIGNER NOTES

LAP LENGTHS FOR ALL BARS SHALL BE BASED ON A "CLASS C" TENSION LAP SPLICE, EXCEPT HORIZONTAL DIAPHRAGM BARS, IF SPLICED, CAN UTILIZE A "CLASS A" TENSION LAP SPLICE.

LEGEND

- ◪ DIMENSION IS TAKEN PARALLEL TO ℄ GIRDER.
- * DIMENSION IS TAKEN NORMAL TO ℄ SUBSTRUCTURE UNITS.
- ◭ PAVING NOTCH IS 1'-0" WIDE BY 1'-4" DEEP IF STRUCTUAL APPROACH SLAB (STD. 12.10) IS USED.
- † BARS PLACED PARALLEL TO GIRDERS. SPACING PERPENDICULAR TO ℄ GIRDERS.

SEE STANDARD 19.34 FOR 36W" & 45W" PRESTESSED GIRDERS SLAB AND SUPERSTRUCTURE DETAILS

SEE STANDARD 19.35 FOR 54W", 72W" & 82W" PRESTRESSED GIRDERS SLAB & SUPERSTRUCTURE DETAILS.

28" & 36" PRESTRESSED GIRDERS SLAB & SUPERSTRUCTURE DETAILS

STATE OF WISCONSIN
DEPARTMENT OF TRANSPORTATION
STRUCTURES DEVELOPMENT SECTION

APPROVED: Bill Oliva

DATE: 1-14