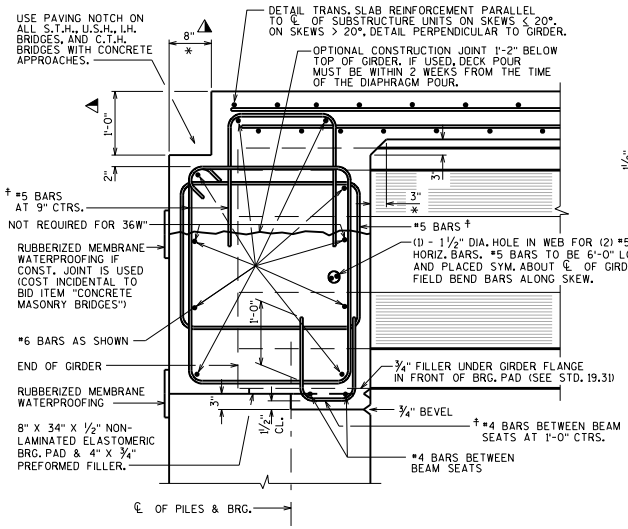

PRESTRESSED GIRDER WITH SEMI-EXPANSION SEAT

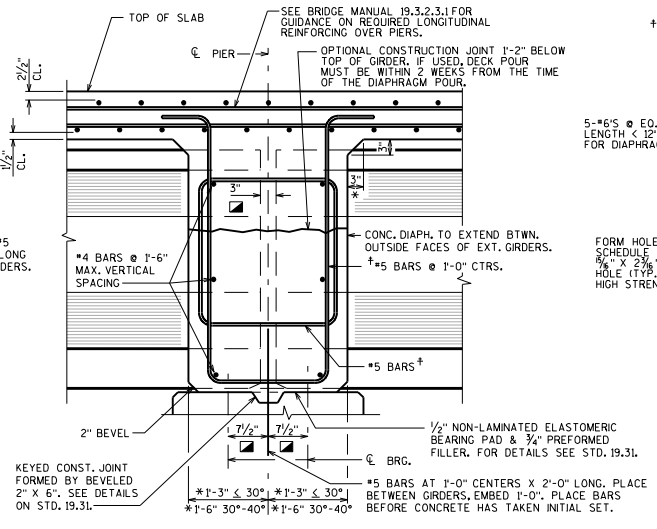

DIAPHRAGM AT 1/2" ELASTOMERIC BEARING

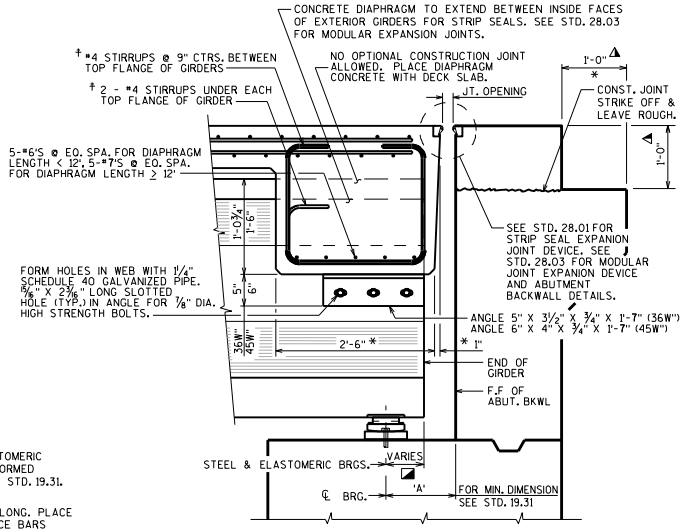

EXPANSION END

0° SKEW SHOWN (NON 0° SKEW SHOWN IN TOP VIEW)

LEGEND

- DIMENSION IS TAKEN PARALLEL TO ℄ GIRDER.
- * DIMENSION IS TAKEN NORMAL TO ℄ SUBSTRUCTURE UNITS.
- △ PAVING NOTCH IS 1'-0" WIDE BY 1'-4" DEEP IF STRUCTURAL APPROACH SLAB (STD. 12.10) IS USED.
- † BARS PLACED PARALLEL TO GIRDERS. SPACING PERPENDICULAR TO ℄ GIRDERS.

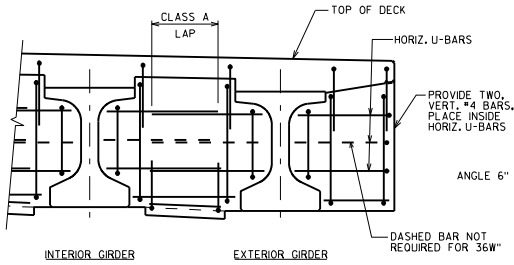

PART TRANSVERSE SECTION AT DIAPHRAGM SEMI EXPANSION END

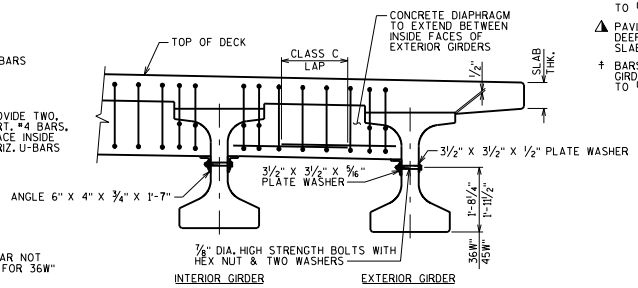

PART TRANSVERSE SECTION AT DIAPHRAGM EXPANSION END

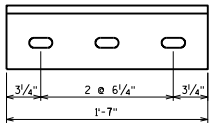

ANGLE

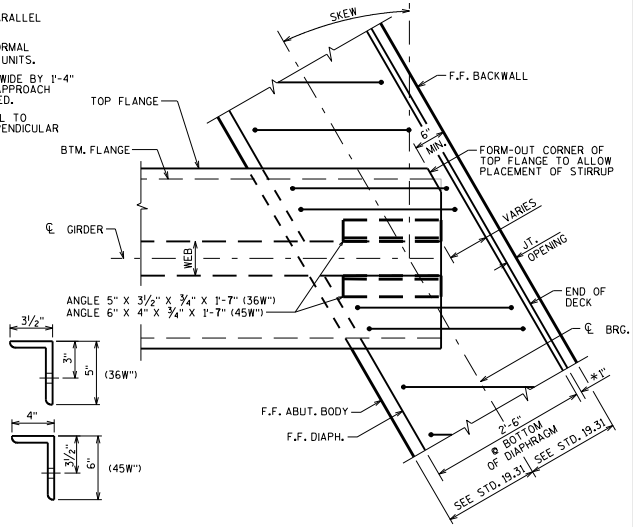

TOP VIEW OF DIAPHRAGM (EXPANSION END)

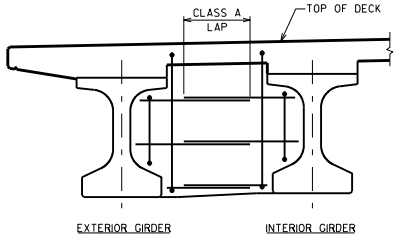

PART TRANSVERSE SECTION AT DIAPHRAGM PIER

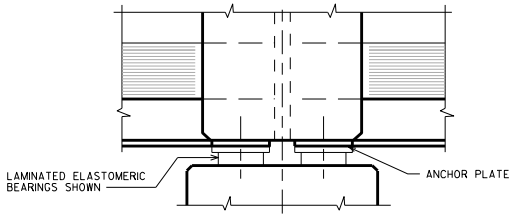

DIAPHRAGM AT STEEL OR ELASTOMERIC BEARINGS SECTION THRU DIAPHRAGM AT PIER

FOR STEEL BEARINGS, FORM DIAPHRAGM APPROXIMATELY 1/2" ABOVE BEARING KEEPER BARS

NOTES

ALL DIAPHRAGM SUPPORT HARDWARE SHALL BE INCIDENTAL TO "CONCRETE MASONRY BRIDGES".

DIAPHRAGM SUPPORT ANGLES SHALL BE ASTM A709 GRADE 36.

ALL DIAPHRAGM SUPPORT HARDWARE INCLUDING BOLTS, NUTS AND WASHERS SHALL BE GALVANIZED AFTER FABRICATION.

STEEL DIAPHRAGM SUPPORT ANGLE TO CONCRETE WEB CONNECTION SHALL BE SNUG-TIGHT PLUS 1/4 TURN. HIGH STRENGTH BOLTS FOR WEB CONNECTION SHALL MEET THE REQUIREMENTS FOR ASTM A325 OR ASTM A449.

DESIGNER NOTE

LAP LENGTHS FOR DIAPHRAGM REINFORCEMENT SHALL BE BASED ON A CLASS "C" TENSION LAP SPLICE, UNLESS OTHERWISE NOTED.

PRESTRESSED 36W" & 45W" GIRDER SLAB & SUPERSTRUCTURE DETAILS

BUREAU OF STRUCTURES

APPROVED: Bill Oliva

DATE: 7-16

STANDARD 19.34