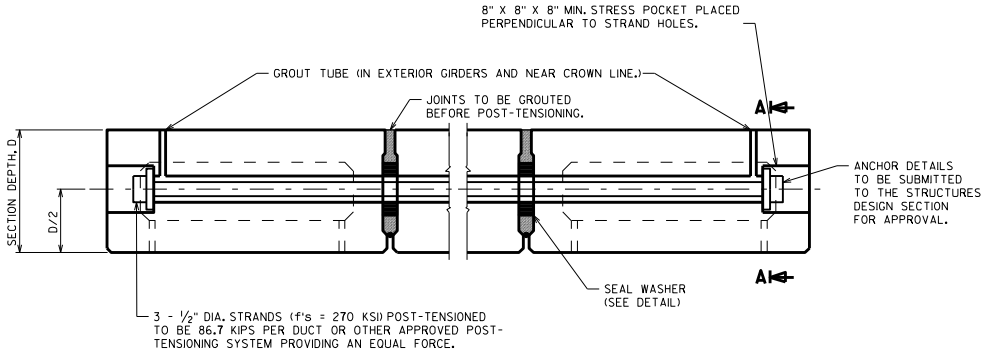

POST-TENSIONING DETAILS - ONE DUCT PER DIAPHRAGM

(SECTIONS 1 THROUGH 4)

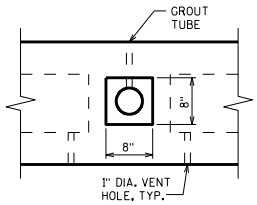

SECTION A-A

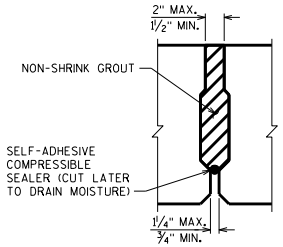

SHEAR KEY DETAIL

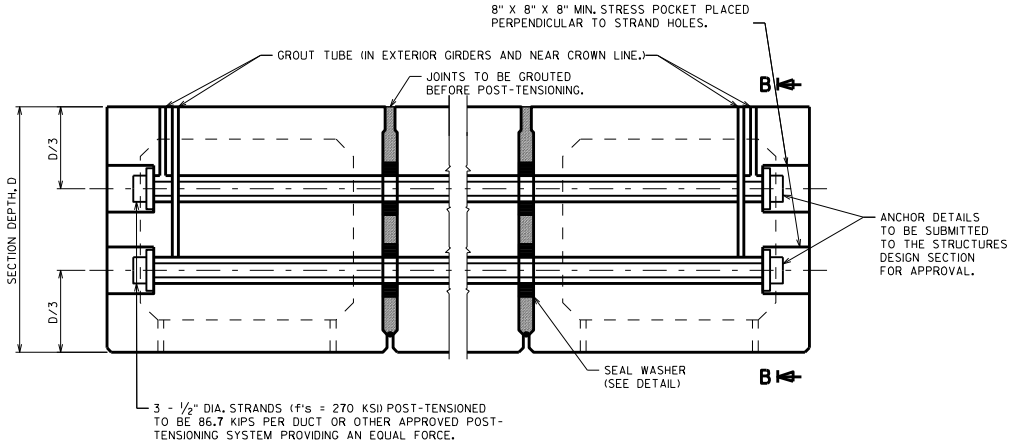

POST-TENSIONING DETAILS - TWO DUCTS PER DIAPHRAGM

(SECTIONS 5 AND 6)

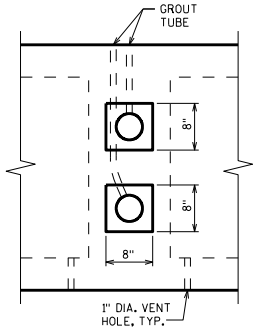

SECTION B-B

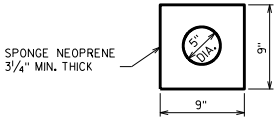

SEAL WASHER

(MAY ALSO BE ROUND)

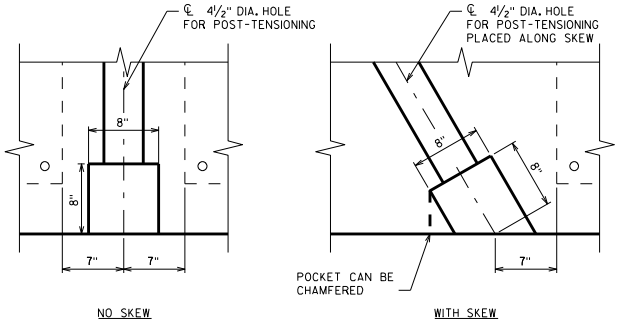

STRESS POCKET DETAIL

PRESTRESSED BOX GIRDER DETAILS 3	
STATE OF WISCONSIN DEPARTMENT OF TRANSPORTATION STRUCTURES DEVELOPMENT SECTION	
APPROVED: Bill Oliva	DATE: 7-16

STANDARD 19.54