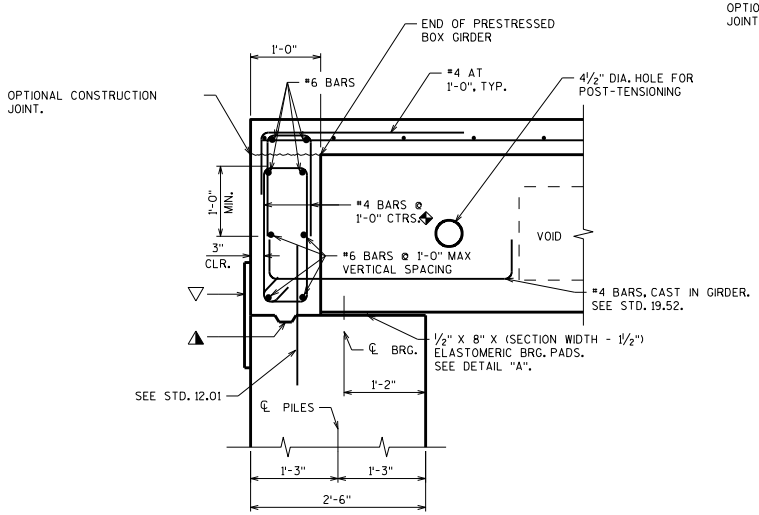

NO PAVING NOTCH - SECTIONS 1 THROUGH 4

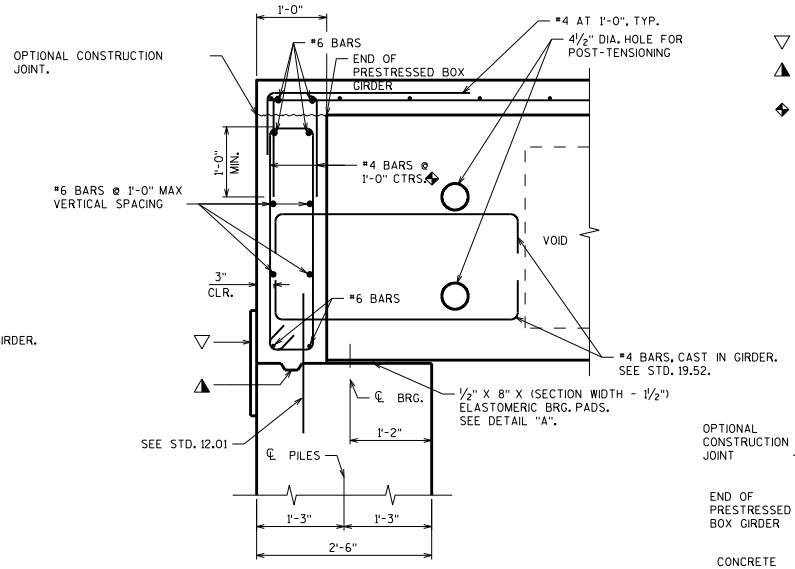

NO PAVING NOTCH - SECTIONS 5 AND 6

LEGEND

- ▽ 1'-6" RUBBERIZED MEMBRANE WATERPROOFING
- ◭ KEYED CONSTRUCTION JOINT FORMED BY BEVELED 2" X 6".
- ◆ BARS PLACED PARALLEL TO GIRDERS. SPACING PERPENDICULAR TO ℄ GIRDERS.

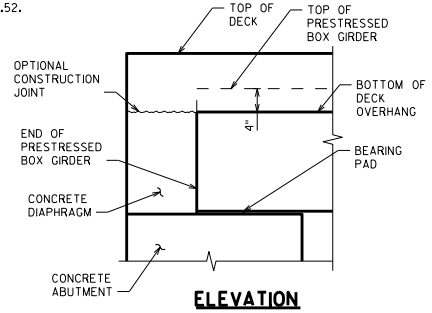

ELEVATION

(SHOWING DECK OVERHANG TERMINATION AT CONCRETE ABUTMENT)

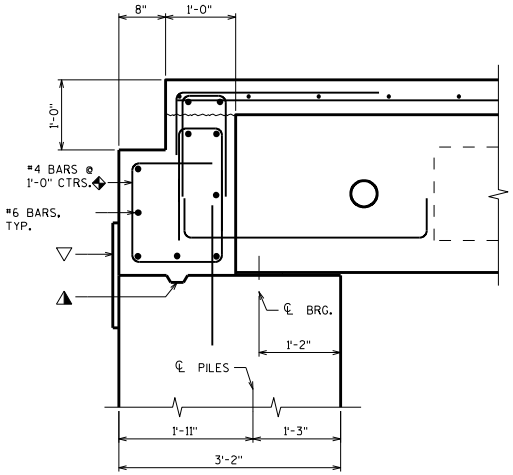

WITH PAVING NOTCH - SECTIONS 1 THROUGH 4

SEE NO PAVING NOTCH - SECTIONS 1 THROUGH 4 DETAIL FOR ADDITIONAL INFORMATION

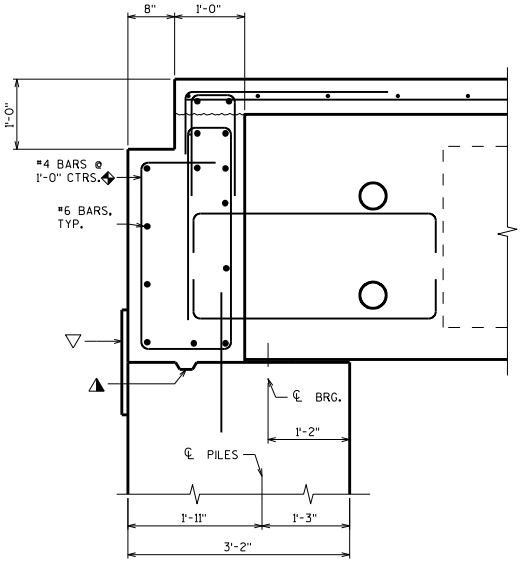

WITH PAVING NOTCH - SECTIONS 5 AND 6

SEE NO PAVING NOTCH - SECTIONS 5 AND 6 DETAIL FOR ADDITIONAL INFORMATION

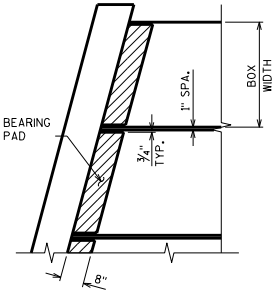

DETAIL "A"

PRESTRESSED BOX GIRDER DETAILS 4

BUREAU OF STRUCTURES

APPROVED: Bill Oliva

DATE: 1-16

STANDARD 19.55