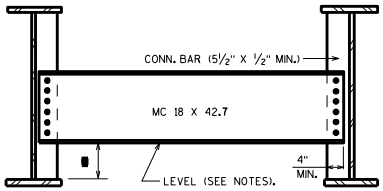

WEB PLATE ≤ 48"
TYP. IN SPAN & AT PIER

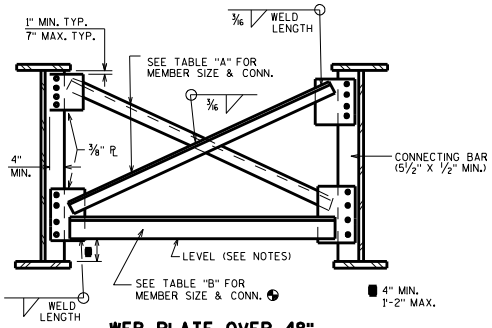

WEB PLATE OVER 48"
TYP. IN SPAN & AT PIER

TABLE "A"

SIZE	MAX. LENGTH OF MEMBER	WELD LENGTH	NO. OF ¾" ϕ BOLTS	WEIGHT PER FT.
L 3½ X 3½ X 5/16	21'-6"	9"	4	7.2#
L 4 X 4 X 5/16	25'-0"	11"	4	8.2#
L 5 X 5 X 5/16	31'-0"	14"	5	10.3#

TABLE "B"

SIZE	MAX. LENGTH OF MEMBER	WELD SIZE	WELD LENGTH	NO. OF ¾" ϕ BOLTS	WEIGHT PER FT.
L 5 X 5 X 5/16	11'-6"	¼"	11"	4	10.3#
L 6 X 6 X ⅜	13'-6"	5/16"	13"	6	14.9#
½" T SECTION SEE DETAIL "A"	17'-6"	5/16"	14"	7	16.6#
½" T SECTION SEE DETAIL "B"	22'-0"	⅜"	13"	7	18.5#

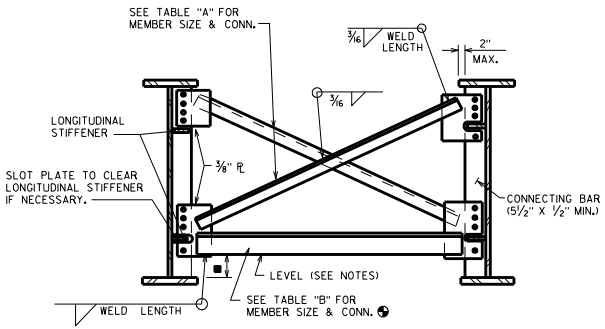

WEB PLATE OVER 48" WITH LONGITUDINAL STIFFENERS
TYP. IN SPAN & AT PIER

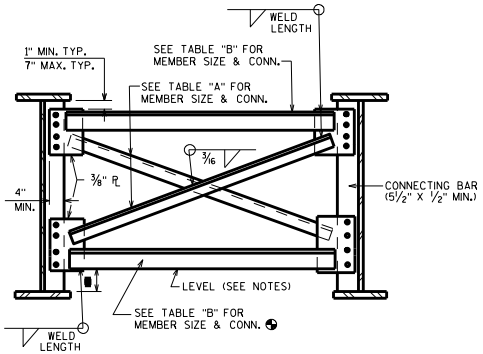

TYP. CURVED GIRDER DIAPHRAGM

ALSO USE TOP HORIZONTAL MEMBER AT DIAPHRAGMS ADJACENT TO KINK POINTS OF KINKED GIRDERS

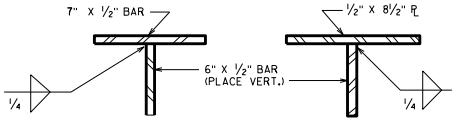

DETAIL "A" **DETAIL "B"**

NOTE: WT 6 X 25 MAY BE SUBSTITUTED FOR DETAIL "A" OR "B"

NOTES

ALL BOLTED CONNECTIONS SHALL BE FRICTION TYPE USING ¾" ϕ HIGH STRENGTH ASTM A325 BOLTS WITH DOUBLE WASHERS.

DIAPHRAGMS OR LOWER CROSS FRAME MEMBERS ARE SLOPED WHEN DIFFERENCE IN ADJACENT BOTTOM FLANGE ELEVATIONS EXCEEDS 6". HOLD 8" FROM TOP OF ADJACENT FLANGES TO BOTTOM OF DIAPHRAGMS OR LOWER CROSS FRAME WHEN THESE MEMBERS ARE SLOPED.

DIAPHRAGMS OR LOWER CROSS FRAME MEMBERS THAT ARE LEVEL SHALL BE PLACED 4" ABOVE THE TOP OF THE HIGHER BOTTOM FLANGE OF ADJACENT GIRDERS.

HOLES IN CROSS FRAME CONNECTIONS MAY BE OVERSIZED @ 15/16" DIA. IN 1 PLY.

DESIGNER NOTES

SEE STD. 24.02 FOR CONNECTION BAR CORNER COPE & WELD DETAILS.

FOR SPANS OVER 200', THE CROSS FRAMES AT THE PIERS SHALL BE DESIGNED TO RESIST THE LATERAL LOADS THAT ARE TRANSFERRED TO THE PIERS.

HORIZONTAL CROSSFRAME MEMBER TO HAVE HORIZONTAL LEG TOP (AS SHOWN) WHEN NO LOWER LATERALS ARE USED. WHEN LOWER LATERALS ARE USED THE HORIZONTAL LEG SHALL BE ON THE BOTTOM. THIS IS TO ALLOW FRAMING INTO THE LOWER LATERAL GUSSET. CURRENT PRACTICE IS TO AVOID THE USE OF LOWER LATERALS. HOWEVER.

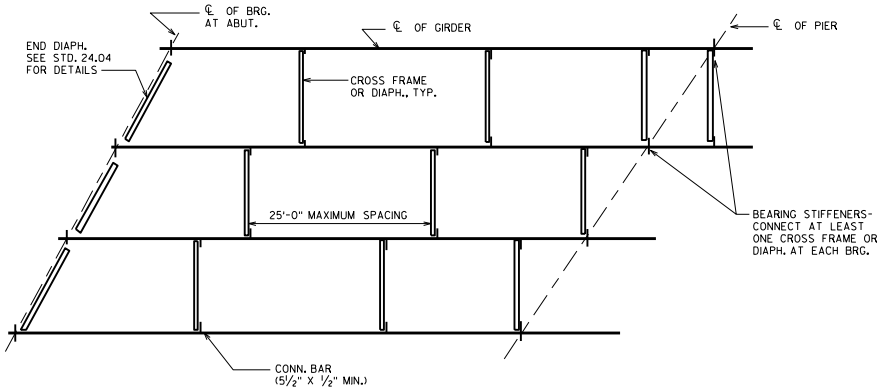

FRAMING PLAN FOR SKEW > 15°

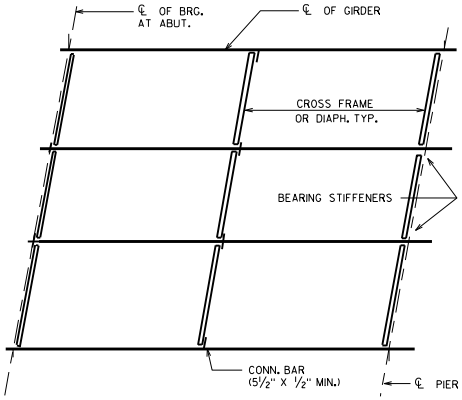

FRAMING PLAN FOR SKEW ≤ 15°

PLATE GIRDER DIAPHRAGMS AND CROSS FRAMES

BUREAU OF STRUCTURES

APPROVED: Bill Oliva

DATE: 7-15

STANDARD 24.03