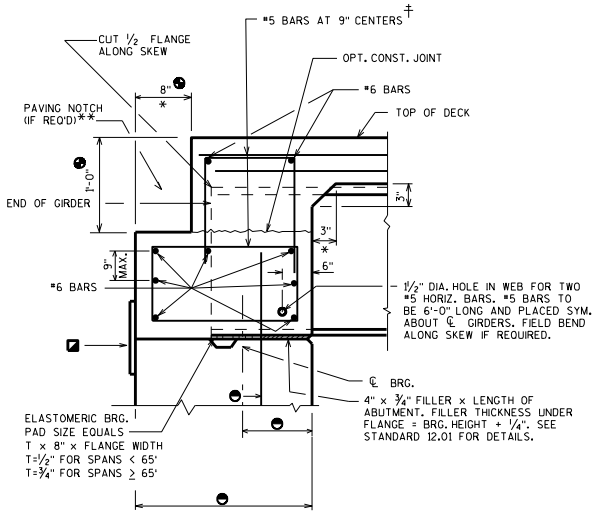


## STEEL GIRDER WITH FIXED SEAT

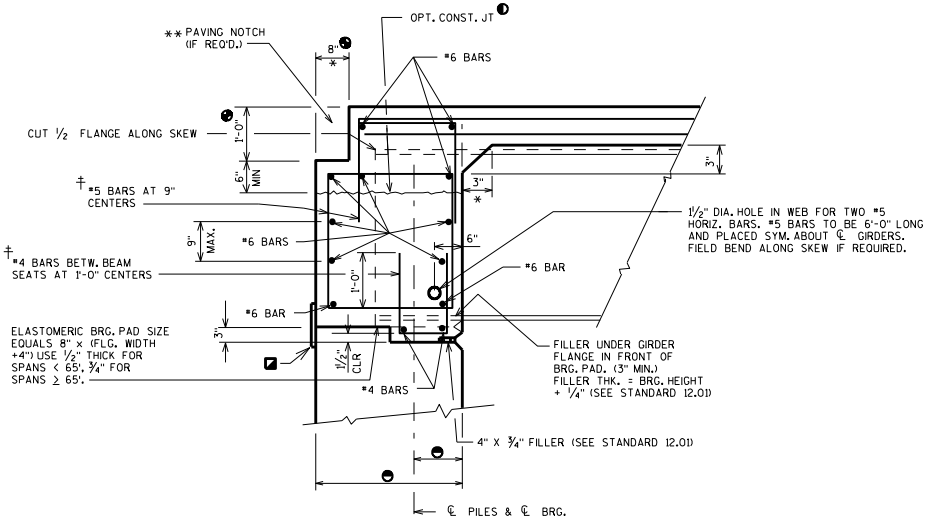


## STEEL GIRDER WITH SEMI-EXPANSION SEAT

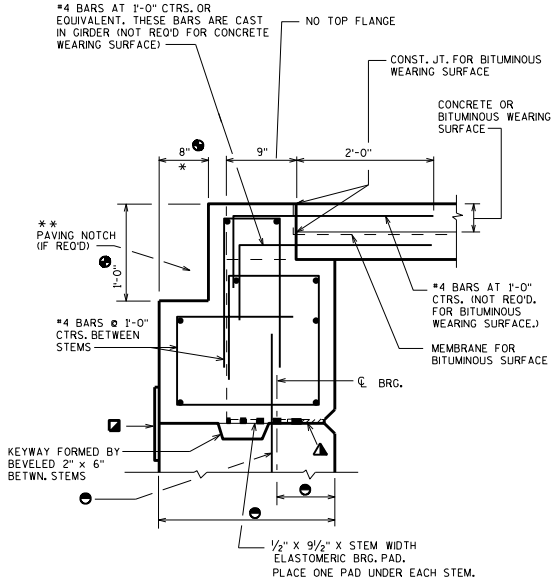


## PRECAST DOUBLE TEE OR MULTI-STEM SECTION

## NOTES

FOR SKEWED STRUCTURES CAST END OF PRECAST TEE ALONG SKEW.

▲ 3/4" x 4" FILLER x LENGTH OF ABUT. PLACE ADDITIONAL FILLER BETWEEN BRG. PAD AND 3/4" x 4" FILLER.

* DIMENSION IS TAKEN NORMAL TO ℄ SUBSTRUCTURE UNITS.

◪ 1'-6" RUBBERIZED MEMBRANE WATERPROOFING

‡ BARS PLACED PARALLEL TO GIRDERS. SPACING PERPENDICULAR TO ℄ GIRDERS.

## DESIGNER NOTES

SEE STANDARD 19.55 FOR PRESTRESSED BOX GIRDER BEARING DETAILS.

◐ THE USE OF THIS OPT. CONST. JOINT IS NOT RECOMMENDED FOR SKEWS OVER 15° WHEN LARGE DEADLOAD END ROTATION IS ANTICIPATED.

** USE PAVING NOTCH ON ALL U.S.H. BRIDGES, S.T.H. BRIDGES, I.H. BRIDGES & ON C.T.H. BRIDGES WITH CONCRETE APPROACHES.

◉ PAVING NOTCH IS 1'-0" WIDE BY 1'-4" DEEP IF STRUCTURAL APPROACH SLAB (STD. 12.10) IS USED.

◓ SEE STD. 12.01

**BRG. DETAILS FOR STEEL GDRS. AND PRECAST UNITS ON A1 ABUTMENTS**

BUREAU OF STRUCTURES

APPROVED: Bill Oliva

DATE: 7-16

STANDARD 27.05