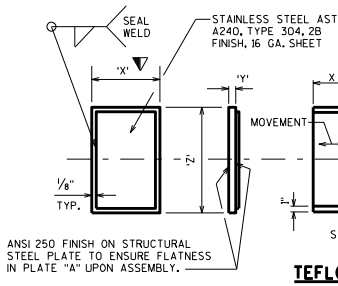

TOP PLATE "A"

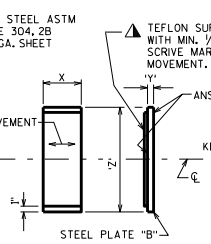

TEFLON SURFACE ON PLATE "B"

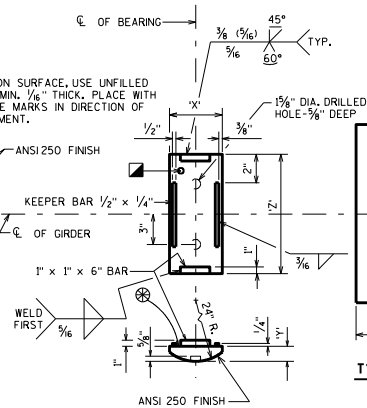

ROCKER PLATE "C"

EXPANSION BEARING

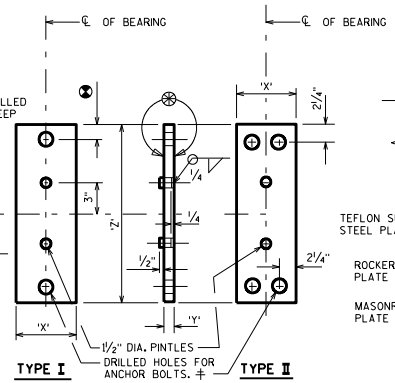

MASONRY PLATE "D"

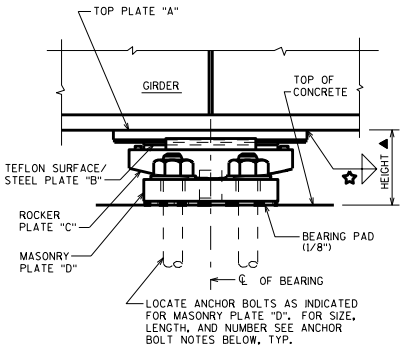

EXPANSION BEARING ASSEMBLY

BEARING NOTES

ALL BEARINGS ARE SYMMETRICAL ABOUT ℄ OF GIRDER AND ℄ OF BEARING.

⊛ FINISH THESE SURFACES TO ANSI 250 IF 'Y' DIMENSION IS GREATER THAN 2".

ANCHOR BOLTS, NUTS AND WASHERS SHALL BE GALVANIZED IN ACCORDANCE WITH ASTM A153, CLASS C.

ROCKER PLATE "C" AND MASONRY PLATE "D" SHALL BE GALVANIZED. TOP PLATE "A" AND STEEL PLATE "B" SHALL BE SHOP PAINTED. USE A WELDABLE PRIMER ON TOP PLATE "A". DO NOT PAINT STAINLESS STEEL OR TEFLON SURFACES.

ALL MATERIAL IN BEARINGS, INCLUDING SHIM PLATES, BUT EXCLUDING STAINLESS STEEL SHEET, TEFLON SURFACE, PINTLES, ANCHOR BOLTS, NUTS AND WASHERS SHALL CONFORM TO ASTM A709 GRADE 50W.

IN LIEU OF USING SHIM PLATES, FABRICATOR MAY INCREASE THICKNESS OF TOP PLATE "A" OR MASONRY PLATE "D" BY THE SHIM PLATE THICKNESS.

⊛ DIMENSION IS 2" WHEN 1 1/4" DIA. ANCHOR BOLTS ARE USED AND 2 1/4" WHEN 1 1/2" DIA. ANCHOR BOLTS ARE USED.

ALL MATERIAL IN TYPE "A-T" BEARINGS, INCLUDING SHIM PLATES AND BEARING PADS, SHALL BE PAID FOR AT THE UNIT PRICE BID FOR "BEARING ASSEMBLIES EXPANSION B-__-__", EACH.

CHAMFER ANCHOR BOLTS PRIOR TO THREADING.

ALL FINISHED SURFACES SHALL BE MACHINE FINISHED BY AN AUTOMATIC PROCESS.

ALL PLATE CUTS SHALL BE MACHINE OR MACHINE FLAME CUTS.

ALL STRUCTURAL STEEL BEARING PLATES SHALL BE FLAT ROLLED STEEL PLATES WITH ALL SURFACES SMOOTH AND FREE FROM WARP AND ALL EDGES SMOOTH, STRAIGHT AND VERTICAL.

PROVIDE 1/8" THICK BEARING PAD THE SAME SIZE AS MASONRY PLATE "D" FOR EACH BEARING.

ANCHOR BOLTS SHALL BE THREADED 3". PROVIDE ONE STANDARD WROUGHT WASHER AND ONE HEX NUT PER BOLT. PROJECT ANCHOR BOLTS, MASONRY PLATE "D" THICKNESS + 2 1/4", ABOVE TOP OF CONCRETE.

CHAMFER TOP OF PINTLES 1/8". DRILL HOLES FOR ALL PINTLES IN MASONRY PLATE "D" FOR A DRIVING FIT.

STEEL PINTLES SHALL CONFORM TO ASTM A449 OR MATERIAL OF EQUIVALENT YIELD STRENGTH AND ELONGATION.

ANCHOR BOLTS, NUTS AND WASHERS SHALL CONFORM TO ASTM A709 GRADE 36, OR MATERIAL OF EQUIVALENT YIELD STRENGTH AND ELONGATION.

PLACE SHIM PLATES BETWEEN BEARING PAD AND MASONRY PLATE "D". PLATES SHALL HAVE 'X' AND 'Z' DIMENSIONS THAT MATCH MASONRY PLATE "D".

◪ PROVIDE A METHOD FOR HANDLING ROCKER PLATE "C" DURING GALVANIZING.

⚠ BOND STEEL PLATE "B" AND TEFLON WITH ADHESIVE MATERIAL MEETING THE REQUIREMENTS FOUND IN THE STANDARD SPECIFICATION.

‡ DRILLED HOLES FOR ANCHOR BOLTS IN MASONRY PLATE "D" SHALL HAVE A DIAMETER 3/8" LARGER THAN ANCHOR BOLT.

AT INSTALLATION, ENSURE STAINLESS STEEL SLIDING FACE OF THE UPPER ELEMENT AND THE TFE SLIDING FACE OF THE LOWER ELEMENT HAVE THE SURFACE FINISH SPECIFIED AND ARE CLEAN AND FREE OF ALL DUST, MOISTURE, OR ANY OTHER FOREIGN MATTER.

DESIGNER NOTES

HEIGHT OF BEARINGS GIVEN IN TABLES INCLUDES 1/8" BEARING PAD, 16 GAGE STAINLESS STEEL SHEET AND 1/16" TEFLON SURFACE.

DETAIL SHIM PLATES AS DESCRIBED IN NOTES ON STANDARD 24.02.

SEE STANDARD 27.02 FOR THE USE OF BEVELED ROCKER PLATE "C" ON GRADES GREATER THAN 3% AND ALSO CLEARANCE REQUIREMENTS.

AT ABUTMENTS, WHEN THE 'X' DIMENSION OF PLATE "A" EXCEEDS 11", INCREASE STANDARD DISTANCE FROM ℄ OF BEARING TO END OF GIRDER.

✿ FOR WELD SIZE, REFER TO STANDARD 24.02.

▲ ADJUST HEIGHT IF BEVELED ROCKER PLATE "C" IS USED.

FOR BEARING REPLACEMENTS, DESIGNER SHALL UTILIZE A WIDER BEARING THAN THE EXISTING GIRDER BOTTOM FLANGE WIDTH TO ALLOW FOR FIELD WELDING CLEARANCES.

FOR BEARING REPLACEMENTS, SEE STD. 27.02 FOR MINIMUM ANCHOR BOLT CLEARANCE INFORMATION.

▼ DIMENSION 'X' SHOWN FOR TOP PLATE 'A' IS A MINIMUM. PROVIDE ADEQUATE LENGTH TO ENSURE PLATE 'B' IS ALWAYS COVERED FOR ALL EXPECTED MOVEMENTS. SEE STD. 27.10 FOR ADDITIONAL GUIDANCE.

CALCULATE THE REACTIONS AT THE BEARINGS DUE TO "TOTAL LOADS" AND ALSO "DEAD LOADS" ONLY. USE THE AASHTO LRFD SERVICE I LOAD COMBINATION. CONSIDER ONLY DEAD LOAD (DC + DW) AND HL-93 LIVE LOADS (LL), INCLUDING A 33% DYNAMIC LOAD ALLOWANCE (IM).

THE VALUES IN THE TABLES ARE THE BEARING CAPACITIES FOR "TOTAL LOAD" (DC + DW + (LL + IM)). TAKE 60% OF THE VALUES IN THE TABLES TO DETERMINE THE BEARING CAPACITIES FOR "DEAD LOAD" ONLY (DC + DW).

SELECT A BEARING THAT HAS A "TOTAL LOAD" CAPACITY GREATER THAN OR EQUAL TO THE CALCULATED "TOTAL LOAD" REACTION AND ALSO A "DEAD LOAD" CAPACITY GREATER THAN OR EQUAL TO THE CALCULATED "DEAD LOAD" REACTION.

ANCHOR BOLT NOTES

FOR SPAN LENGTHS UP TO 100'-0":
USE A TYPE I MASONRY PLATE "D" WITH (2) - 1 1/4" DIA. x 1'-5" LONG ANCHOR BOLTS.

FOR SPAN LENGTHS FROM 100'-0" UP TO 150'-0":
USE A TYPE I MASONRY PLATE "D" WITH (2) - 1 1/2" DIA. X 1'-10" LONG ANCHOR BOLTS.

FOR SPAN LENGTHS GREATER THAN 150'-0":
USE A TYPE II MASONRY PLATE "D" WITH (4) - 1 1/2" DIA. X 1'-10" LONG ANCHOR BOLTS.

CHECK THAT ANCHOR BOLTS PROVIDE ADEQUATE HORIZONTAL CAPACITY.

10" BEARING

TOTAL LOAD (KIPS)	PLATE A			PLATE B			PLATE C			PLATE D			HEIGHT FEET
	X	Y	Z	X	Y	Z	X	Y	Z	X	Y	Z	
100	9"	5/8"	10"	5"	1/2"	10"	7"	1 7/16"	1'-0 1/4"	8"	1 1/2"	1'-8"	0.360
180	1'-1"	5/8"	10"	9"	1/2"	10"	11"	2 3/8"	1'-0 1/4"	8"	1 1/2"	1'-8"	0.438
260	1'-5"	5/8"	10"	1'-1"	1/2"	10"	1'-3"	3 7/8"	1'-0 1/4"	11"	2"	1'-8"	0.604

12" BEARING

TOTAL LOAD (KIPS)	PLATE A			PLATE B			PLATE C			PLATE D			HEIGHT FEET
	X	Y	Z	X	Y	Z	X	Y	Z	X	Y	Z	
125	9"	5/8"	1'-0"	5"	1/2"	1'-0"	7"	1 7/16"	1'-2 1/4"	8"	1 1/2"	1'-10"	0.360
175	11"	5/8"	1'-0"	7"	1/2"	1'-0"	9"	1 15/16"	1'-2 1/4"	8"	1 1/2"	1'-10"	0.401
275	1'-3"	5/8"	1'-0"	11"	1/2"	1'-0"	1'-1"	2 7/8"	1'-2 1/4"	11"	2"	1'-10"	0.521

14" BEARING

TOTAL LOAD (KIPS)	PLATE A			PLATE B			PLATE C			PLATE D			HEIGHT FEET
	X	Y	Z	X	Y	Z	X	Y	Z	X	Y	Z	
210	11"	5/8"	1'-2"	7"	1/2"	1'-2"	9"	1 5/16"	1'-4 1/4"	8"	1 1/2"	2'-0"	0.401
375	1'-5"	5/8"	1'-2"	1'-1"	1/2"	1'-2"	1'-3"	3 7/8"	1'-4 1/4"	1'-2"	2 7/8"	2'-0"	0.677
500	1'-9"	5/8"	1'-2"	1'-5"	1/2"	1'-2"	1'-7"	4 7/8"	1'-4 1/4"	1'-5"	3 3/8"	2'-1"	0.802

16" BEARING

TOTAL LOAD (KIPS)	PLATE A			PLATE B			PLATE C			PLATE D			HEIGHT FEET
	X	Y	Z	X	Y	Z	X	Y	Z	X	Y	Z	
245	11"	5/8"	1'-4"	7"	1/2"	1'-4"	9"	1 15/16"	1'-6 1/4"	8"	1 1/2"	2'-2"	0.401
370	1'-3"	5/8"	1'-4"	11"	1/2"	1'-4"	1'-1"	2 7/8"	1'-6 1/4"	1'-0"	2 3/8"	2'-3"	0.552
525	1'-7"	5/8"	1'-4"	1'-3"	1/2"	1'-4"	1'-5"	3 7/8"	1'-6 1/4"	1'-4"	3 3/8"	2'-3"	0.719
575	1'-9"	5/8"	1'-4"	1'-5"	1/2"	1'-4"	1'-7"	4 7/8"	1'-6 1/4"	1'-6"	3 7/8"	2'-3"	0.844

18" BEARING

TOTAL LOAD (KIPS)	PLATE A			PLATE B			PLATE C			PLATE D			HEIGHT FEET
	X	Y	Z	X	Y	Z	X	Y	Z	X	Y	Z	
280	11"	5/8"	1'-6"	7"	1/2"	1'-6"	9"	1 15/16"	1'-8 1/4"	9"	2"	2'-4"	0.443
360	1'-1"	5/8"	1'-6"	9"	1/2"	1'-6"	11"	2 3/8"	1'-8 1/4"	11"	2"	2'-4"	0.479
600	1'-7"	5/8"	1'-6"	1'-3"	1/2"	1'-6"	1'-5"	3 7/8"	1'-8 1/4"	1'-5"	3 3/8"	2'-5"	0.719
650	1'-11"	5/8"	1'-6"	1'-7"	1/2"	1'-6"	1'-9"	4 7/8"	1'-8 1/4"	1'-10"	3 7/8"	2'-5"	0.844

20" BEARING

TOTAL LOAD (KIPS)	PLATE A			PLATE B			PLATE C			PLATE D			HEIGHT FEET
	X	Y	Z	X	Y	Z	X	Y	Z	X	Y	Z	
225	9"	5/8"	1'-8"	5"	1/2"	1'-8"	7"	1 7/16"	1'-10 1/4"	8"	1 1/2"	2'-6"	0.360
315	11"	5/8"	1'-8"	7"	1/2"	1'-8"	9"	1 15/16"	1'-10 1/4"	9"	2"	2'-6"	0.443
495	1'-3"	5/8"	1'-8"	11"	1/2"	1'-8"	1'-1"	2 7/8"	1'-10 1/4"	1'-1"	2 7/8"	2'-7"	0.594
675	1'-7"	5/8"	1'-8"	1'-3"	1/2"	1'-8"	1'-5"	3 7/8"	1'-10 1/4"	1'-6"	3 7/8"	2'-7"	0.760
705	1'-11"	5/8"	1'-8"	1'-7"	1/2"	1'-8"	1'-9"	4 7/8"	1'-10 1/4"	1'-11"	3 7/8"	2'-7"	0.844

STAINLESS STEEL - TFE EXPANSION BEARING DETAILS TYPE 'A-T'

BUREAU OF STRUCTURES

APPROVED: Bill Oliva

DATE: 1-17

STANDARD 27.08