* 6" MAX. SPA.

** 1'-0" MAX. SPA.

◐ PERPENDICULAR TO FACE OF CURB

⑮ SEE DETAIL ON STANDARD 28.05

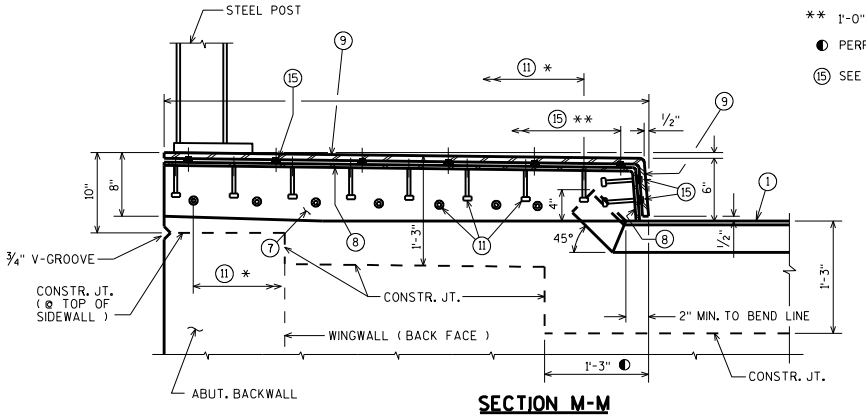

SECTION M-M

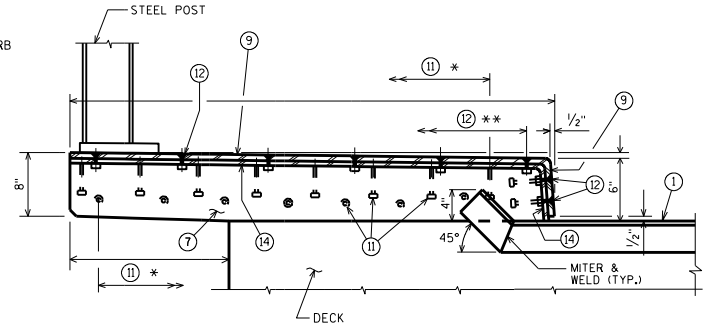

SECTION N-N

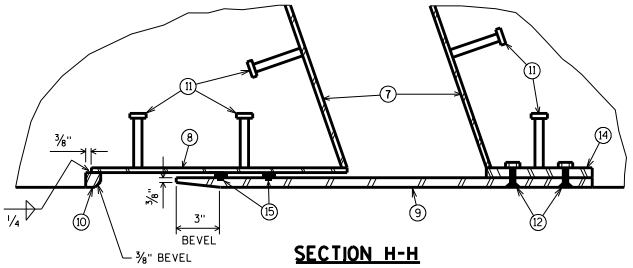

SECTION H-H

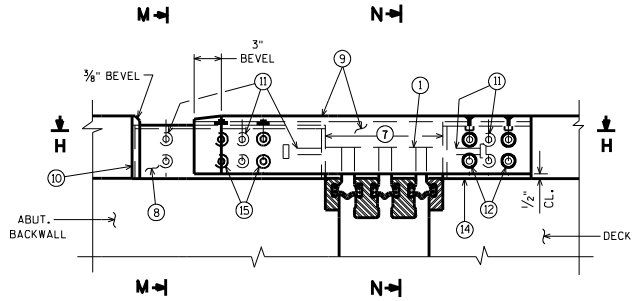

ELEVATION OF SIDEWALK W/ STEEL POST

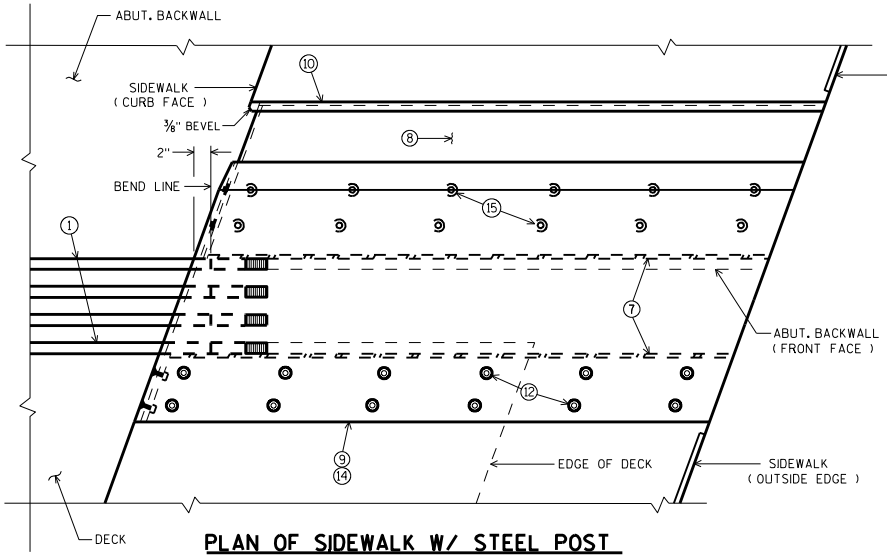

PLAN OF SIDEWALK W/ STEEL POST

DIRECTION OF TRAFFIC
DETERMINES THE ORIENTATION
OF PLATES ⑨ & ⑩

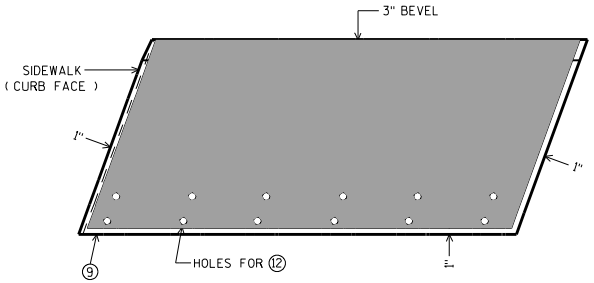

PLAN OF SIDEWALK COVER PLATE WITH SLIP-RESISTANT SURFACE ◪

◪ PLACE SLIP-RESISTANT SURFACE ON TOP WALKING SURFACE IN SHADED AREA ONLY (NOT ON CURB FACE). GALVANIZE PLATE AFTER SLIP-RESISTANT SURFACE IS APPLIED.

APPROVED SLIP-RESISTANT APPLIED SURFACES FOR STEEL PLATES		
PRODUCT	MANUFACTURER	CONTACT AT
SLIPNOT GRADE 2. STEEL	W. S. MOLNAR COMPANY	1-800-SLIPNOT
ALGRIP. STEEL	ROSS TECHNOLOGY CORP.	1-800-345-8170

COVER PLATES FOR SIDEWALK W/ STEEL RAIL

STATE OF WISCONSIN
DEPARTMENT OF TRANSPORTATION
STRUCTURES DEVELOPMENT SECTION

APPROVED: Scot Becker DATE: 7-11

STANDARD 28.06