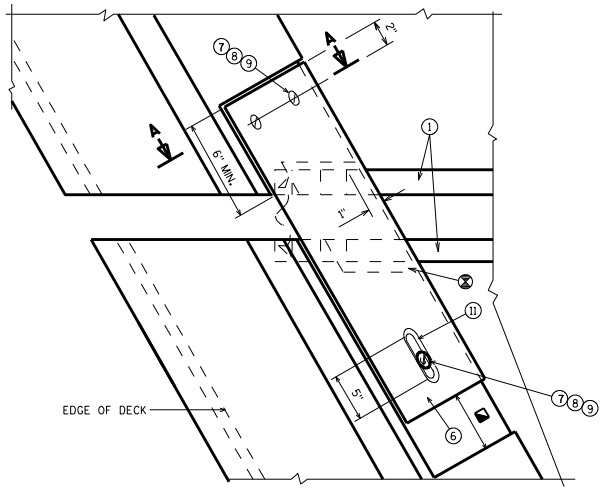

PLAN AT PARAPET

SLOPED FACE PARAPET

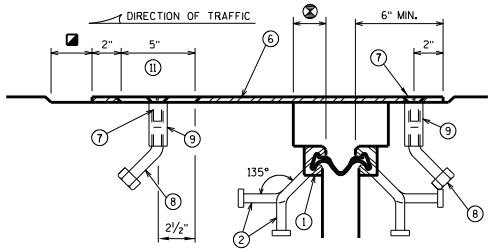

SECTION C-C

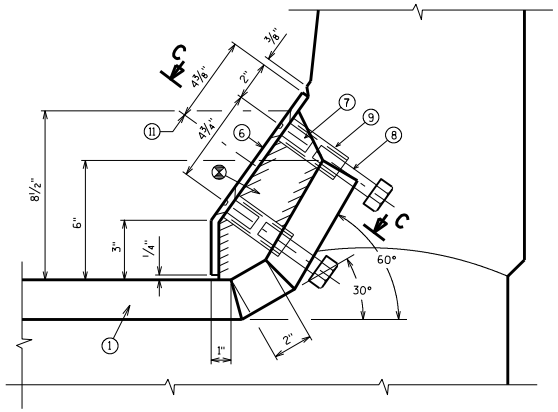

SECTION A-A

SLOPED FACE PARAPET

(6) GALVANIZED PLATE 3/8" x 10½" x (2'-2" LONG FOR SKEWS TO 45° AND 3'-0" LONG FOR SKEWS ≥ 45°) WITH HOLES FOR NO. 7. BEND AS SHOWN.

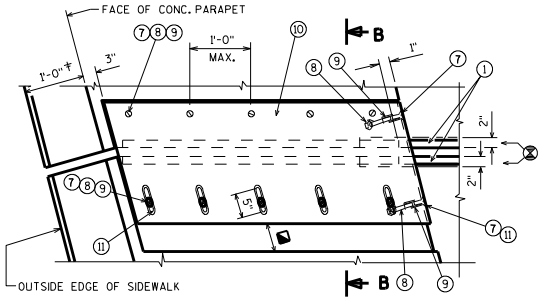

PLAN AT SIDEWALK

‡ 1'-2" WHEN "VERTICAL FACE PARAPET TYPE 'TX' IS USED

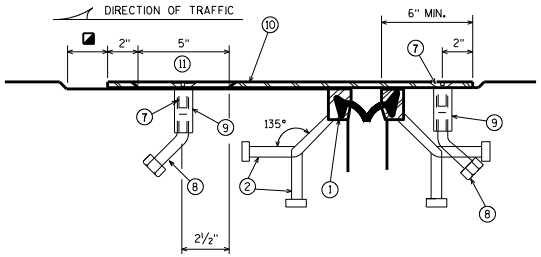

SECTION B-B

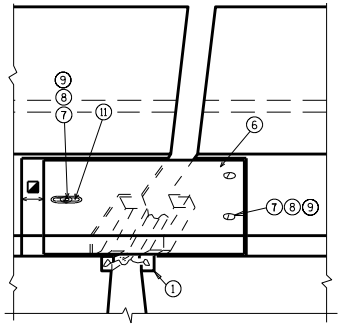

VIEW OF PARAPET PLATES FROM ROADWAY

SLOPED FACE PARAPET

⊗ BLOCK OUT CONCRETE 2" EACH SIDE OF JOINT OPENING

◪ JOINT OPENING DIM. ALONG SKEW PLUS ½"

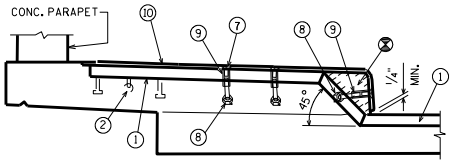

SECTION AT SIDEWALK

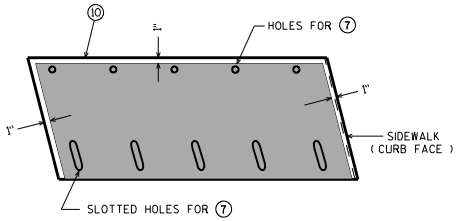

PLAN OF SIDEWALK COVER PLATE WITH SLIP-RESISTANT SURFACE

PLACE SLIP-RESISTANT SURFACE ON TOP WALKING SURFACE IN SHADED AREA ONLY (NOT ON CURB FACE).

APPROVED SLIP-RESISTANT APPLIED SURFACES FOR STEEL PLATES		
PRODUCT	MANUFACTURER	CONTACT AT
SLIPNOT GRADE 2, STEEL	W. S. MOLNAR COMPANY	1-800-SLIPNOT
ALGRIP, STEEL	ROSS TECHNOLOGY CORP.	1-800-345-8170

STRIP SEAL COVER PLATES SLOPED FACE PARA./SDWK.

WISCONSIN DEPARTMENT OF TRANSPORTATION — BUREAU OF STRUCTURES

APPROVED: Bill Oliva

DATE: 7-13

STANDARD 28.07