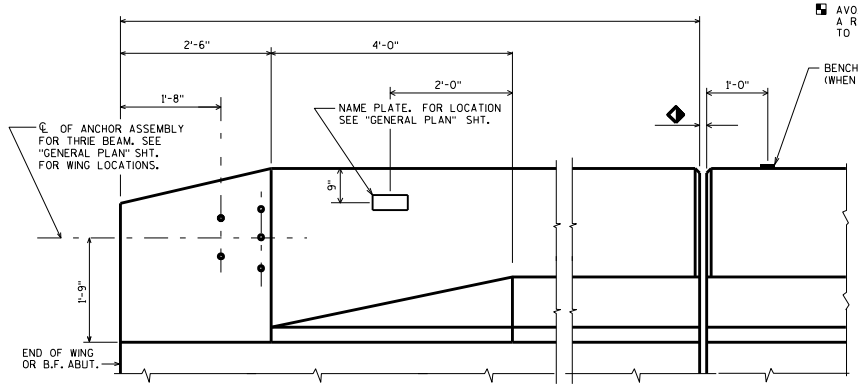

AVOID PLACING A BENCH MARK CAP BELOW A RAIL OR FENCE SYSTEM THAT IS ATTACHED TO THE TOP OF THE PARAPET.

BENCH MARK CAP (WHEN SUPPLIED)

INSIDE ELEVATION

◆ ROADWAY OPENING OR 2½" MIN. FOR EXPANSION JOINT. USE ½" OPENING WITH FILLER FOR A1 ABUTMENTS

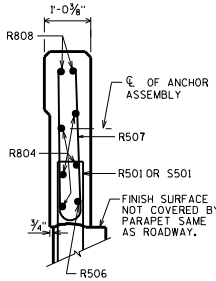

SECTION A

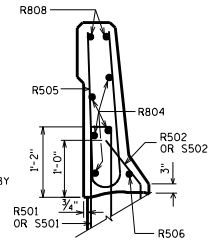

SECTION B

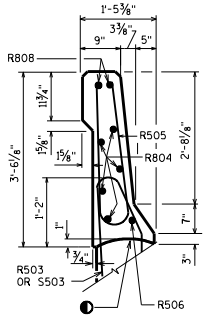

SECTION C

◐ CONST. JOINT - STRIKE OFF AS SHOWN.

▲ LENGTH SHOWN FOR BAR IS AN AVERAGE LENGTH AND SHOULD ONLY BE USED FOR BAR WEIGHT CALCULATIONS. SEE BAR SERIES TABLE FOR ACTUAL LENGTHS.

BILL OF BARS

FOR ABUTMENT PARAPETS

BAR MARK	COAT	ABUT.	ABUT.	LENGTH	BENT	BAR SERIES	LOCATION
R501	X			4'-7"	X		PARAPET VERT.
R502	X			2'-4"	X		PARAPET VERT.
R503	X			4'-7"	X		PARAPET VERT.
R804	X						PARAPET HORIZ.
R505	X			6'-6"	X		PARAPET VERT.
R506	X				X		PARAPET HORIZ.
R507	X			5'-8"	X	▲	PARAPET VERT.
R808	X				X		PARAPET HORIZ.
S501	X			4'-5"	X		PARAPET VERT.
S502	X			2'-4"	X		PARAPET VERT.
S503	X			4'-2"	X		PARAPET VERT.

BAR SERIES TABLE

MARK	NO. REQD.	LENGTH
R507	4 SERIES OF 6	4'-10" TO 6'-6"

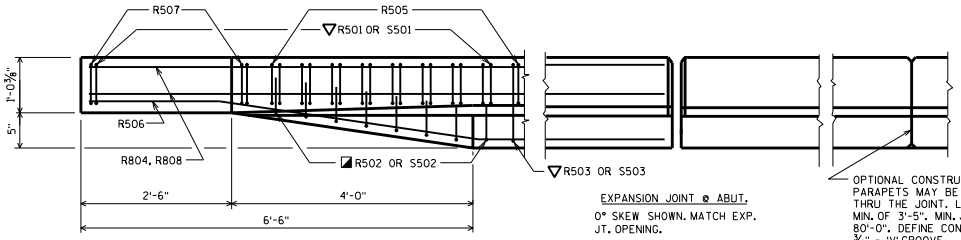

PLAN

EXPANSION JOINT @ ABUT.

0° SKEW SHOWN. MATCH EXP. JT. OPENING.

FOR TYPE A1 ABUT., USE ½" FILLER TO TOP OF PARAPET. SEE STD. 12.01.

OPTIONAL CONSTRUCTION JOINTS IN THE PARAPETS MAY BE USED. RUN BAR REINF. THRU THE JOINT. LAP LONGIT. BARS A MIN. OF 3'-5". MIN. JOINT SPACING OF 80'-0". DEFINE CONST. JOINT WITH A ¾" - 'V' GROOVE.

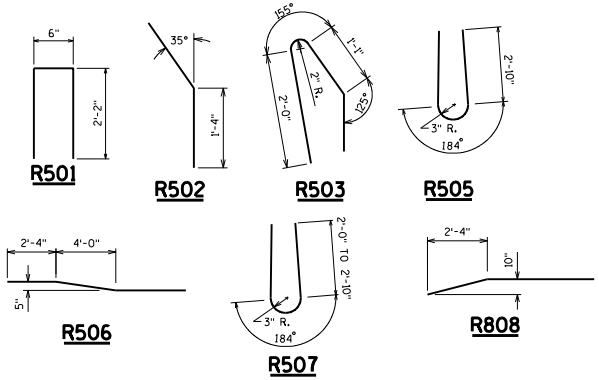

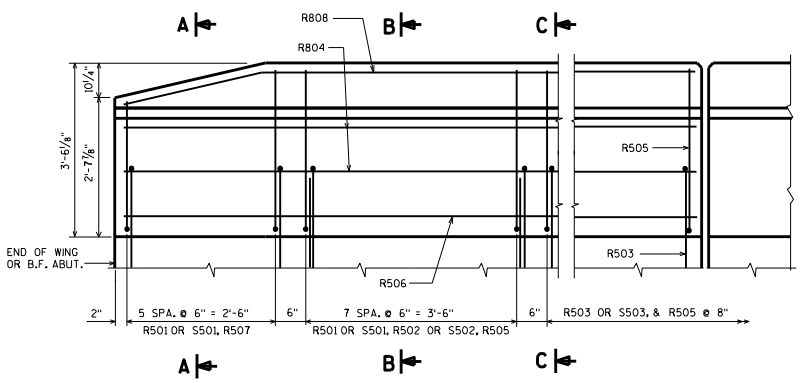

OUTSIDE ELEVATION

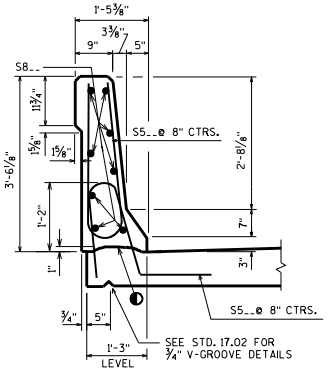

SECTION THRU PARAPET ON BRIDGE

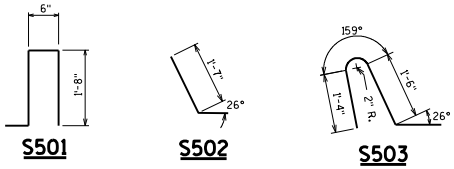

BARS FOR TRANSITION ON BRIDGE

AREA = 3.16 SF
WEIGHT = 474 LB/FT

◐ CONST. JOINT - STRIKE OFF AS SHOWN.

◪ R502 BARS MAY BE PLACED AFTER CONCRETE IS POURED BUT BEFORE INITIAL SET HAS TAKEN PLACE. USE CARE TO PLACE R502 OR S502 BARS CORRECTLY ALONG TRANSITION OF PARAPET.

▽ R501 AND R503 BARS TO BE TIED TO WING STEEL BEFORE WING IS POURED.

A R503 BAR MAY BE USED IN LIEU OF A S503 BAR ADJACENT TO THE PAVING NOTCH ON TYPE A1 ABUTMENTS.

SLOPED FACE PARAPET 'HF'

BUREAU OF STRUCTURES

APPROVED: Bill Oliva

DATE: 7-14

STANDARD 30.13