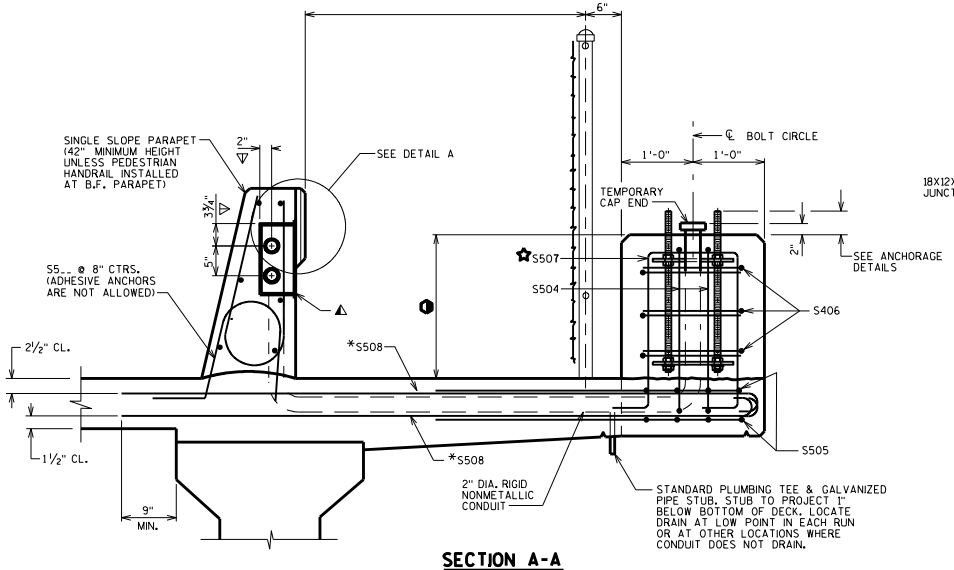

SECTION A-A

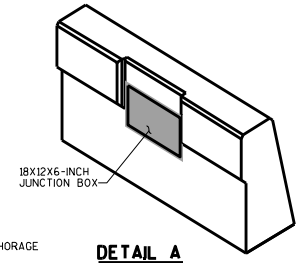

DETAIL A

SHOWING B.F. OF PARAPET WITH BLOCK OUT FOR JUNCTION BOX.

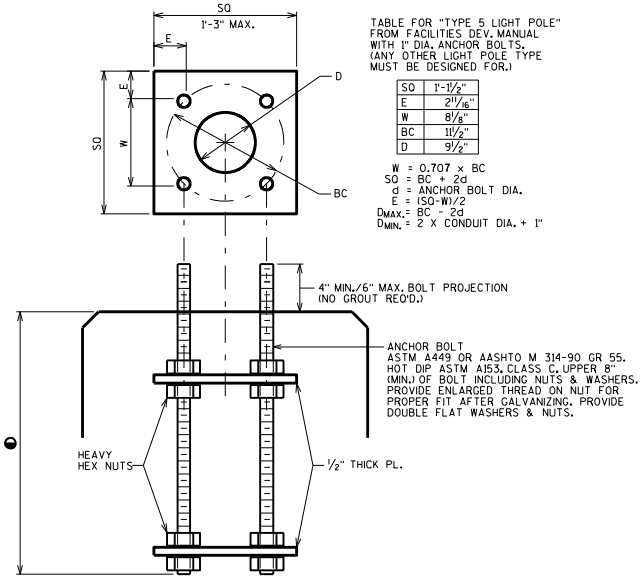

TABLE FOR "TYPE 5 LIGHT POLE" FROM FACILITIES DEV. MANUAL WITH 1" DIA. ANCHOR BOLTS. (ANY OTHER LIGHT POLE TYPE MUST BE DESIGNED FOR.)

SQ	1'-1½"
E	2 11/16"
W	8⅛"
BC	11½"
D	9½"

W = 0.707 x BC
SQ = BC + 2d
d = ANCHOR BOLT DIA.
E = (SQ-W)/2
$D_{MAX.}$ = BC - 2d
$D_{MIN.}$ = 2 X CONDUIT DIA. + 1"

ANCHORAGE DETAIL

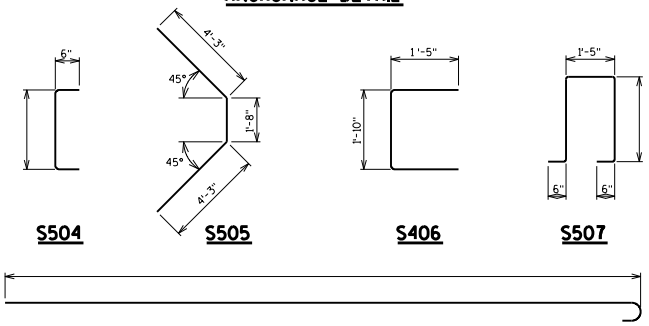

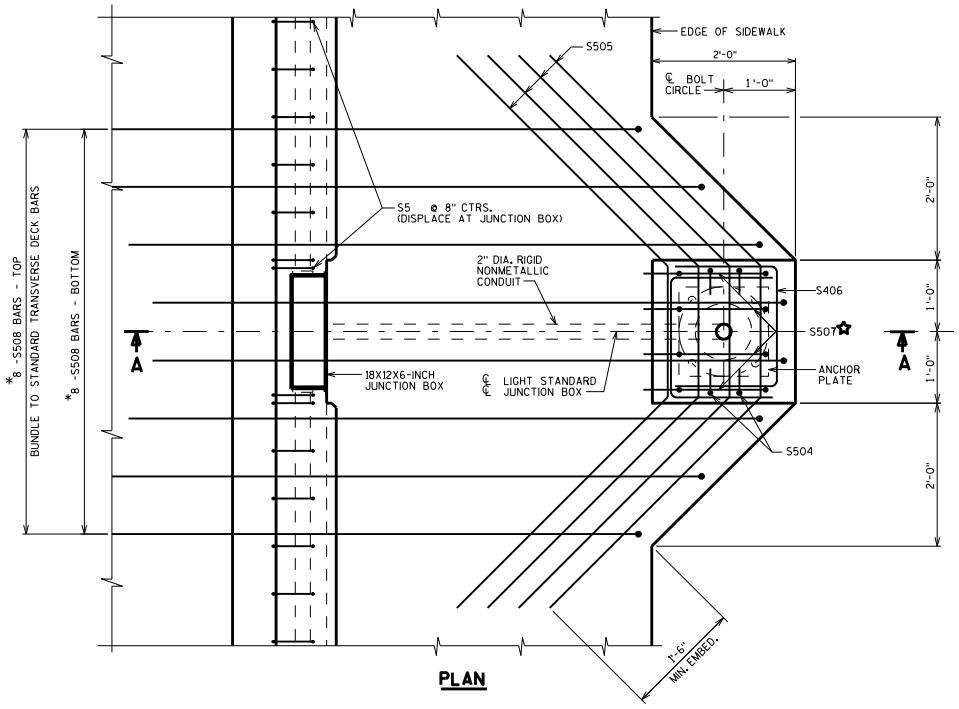

PLAN

◒ STAND-ALONE PEDESTAL
- 1" DIA. ANCHOR BOLTS = 2'-0"
- < 1" DIA. ANCHOR BOLTS = 1'-3"

◐ STAND-ALONE PEDESTAL
- 1" DIA. ANCHOR BOLTS = 1'-11"
- < 1" DIA. ANCHOR BOLTS = 1'-2"

PARAPET BLISTER
- SEE STANDARD 30.21

▲ CUT OUT ± 1" OF GASKET AT BOTTOM OF JUNCTION BOX COVER TO ALLOW FOR DRAINAGE.

▽ LOCATION OF CONDUIT IS MEASURED FROM OUTSIDE EDGE OF JUNCTION BOX.

✡ TIE IN PLACE AFTER ANCHOR BOLT ASSEMBLY LOCATED.

* THESE BARS ARE IN ADDITION TO STANDARD TRANSVERSE BARS IN DECK.

BILL OF BARS

BAR MARK	COAT	NO. REQ'D.	LENGTH	BENT	LOCATION
S504	X			X	LIGHT STD., VERT.
S505	X		10-2	X	LIGHT STD., HORIZ. IN DECK
S406	X		4-6	X	LIGHT STD., HORIZ.
S507	X			X	LIGHT STD., VERT.
S508	X			X	LIGHT STD., TRANSV. IN DECK

NOTES

BID ITEM SHALL BE "ANCHOR ASSEMBLIES LIGHT POLES" EA.

SEE STD. 30.11 FOR FENCE DETAILS.

SEE STD. 30.21 FOR
- ADDITIONAL NOTES
- END OF BRIDGE DETAILS

THIS STANDARD ACCOMMODATES A MAXIMUM 15" DIA. BOLT HOLE CIRCLE AND A MAXIMUM 15" X 15" SQUARE ANCHOR PLATE WITH (4) - 1" DIA. ANCHOR BOLTS. THIS STANDARD IS BASED ON A 8" MIN. DECK THICKNESS.

LIGHTING DETAIL

STATE OF WISCONSIN
DEPARTMENT OF TRANSPORTATION
STRUCTURES DEVELOPMENT SECTION

APPROVED: Bill Oliva

DATE: 7-16

STANDARD 30.14