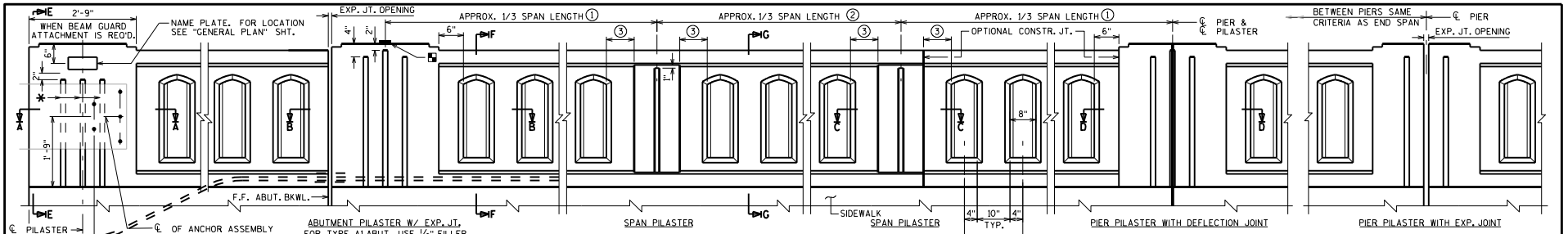

INSIDE ELEVATION

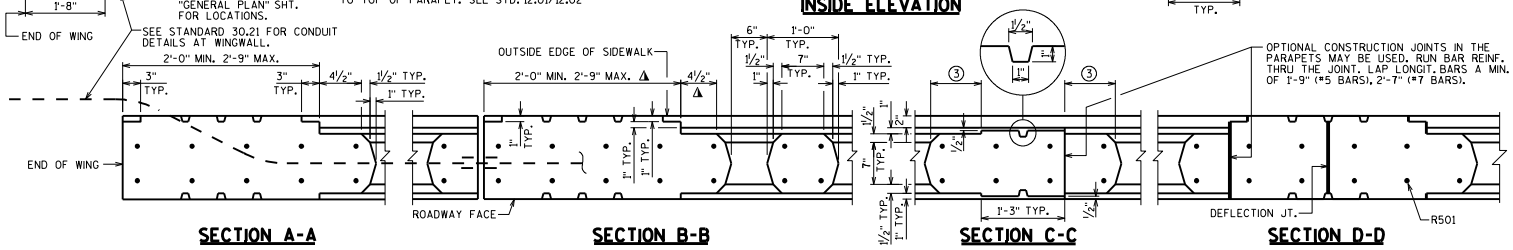

SECTION A-A | SECTION B-B | SECTION C-C | SECTION D-D

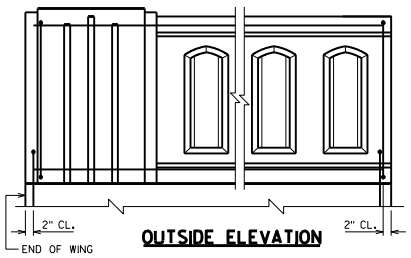

OUTSIDE ELEVATION

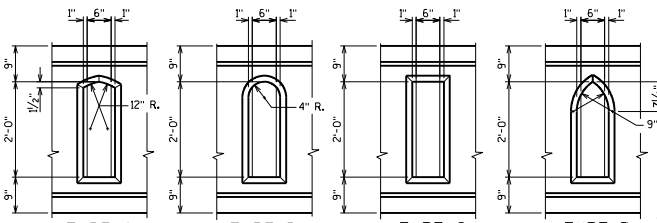

TYPE A | TYPE B | TYPE C | TYPE D

WINDOW TYPES

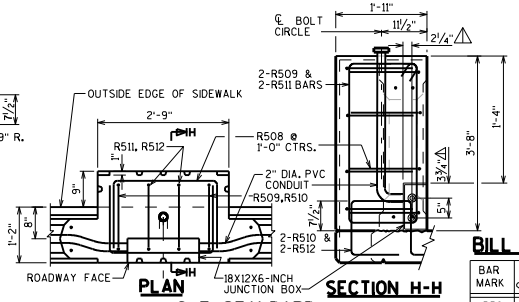

PLAN | SECTION H-H

LIGHT STANDARD

SEE STANDARD 30.14 FOR CONDUIT AND ANCHORAGE DETAILS.

FOR ELECTRICAL REQUIREMENTS FOR LIGHTING SEE "NOTES" ON STANDARD 30.21.

NOTES

① NUMBER OF WINDOWS SHALL BE EQUAL.

② NUMBER OF WINDOWS SHALL NOT BE LESS THAN THE AMOUNT IN ①. SPAN PILASTERS MAY BE SPACED AT 1/5 POINTS IN LONG SPANS.

③ DIMENSION SHALL BE THE SAME FOR ALL POSTS ADJACENT TO SPAN PILASTERS IN A SPAN. DIMENSION MAY VARY FROM SPAN TO SPAN. MIN. = 3", MAX. = 7½"

BID ITEM SHALL BE "PARAPET CONCRETE TYPE 'TX'", WHICH SHALL INCLUDE ALL ITEMS SHOWN.

WHEN PARAPETS ARE POURED CONTINUOUSLY FROM END TO END, THEY SHALL BE SEPARATED AT THE DEFLECTION JOINTS BY A PIECE OF ⅛" ZINC OR PLASTIC PLATE CUT AS SHOWN ON STANDARD 30.07. IF CONSTRUCTION JOINTS IN PARAPETS ARE USED AT THE DEFLECTION JOINTS, ONE SIDE OF JOINT SHALL BE COATED WITH BITUMINOUS PAINT AND PLATE SEPARATORS MAY BE OMITTED.

SEE STD. 30.07 FOR
- DEFLECTION JOINT DETAILS
- ANCHOR ASSEMBLY DETAILS
- SIDEWALK REINFORCEMENT AND DETAILS

⚠ LOCATION OF CONDUIT IS MEASURED FROM OUTSIDE EDGE OF JUNCTION BOX.

◭ VALUE APPLIES TO PIER PILASTER ALSO.

◐ CONST. JOINT - STRIKE OFF AS SHOWN AND LEAVE ROUGH.

✱ WHEN BEAM GUARD ATTACHMENT IS NOT REQ'D, BUT NAME PLATE IS PRESENT, USE RUSTICATIONS AS SHOWN. (AT ENDS W/O NAME PLATE AND BEAM GUARD ATTACHMENT USE RUSTICATION DETAILS AS SHOWN FOR ABUTMENT PILASTER.

BILL OF BARS

BAR MARK	COAT	NO. REQ'D.	LENGTH	BENT	LOCATION
R501	X		8-6	X	PARAPET VERT.
R502	X		3-4	X	PARAPET VERT.
R503	X				PARAPET HORIZ. BOT.
R704	X				PARAPET HORIZ. TOP
R505	X		4-4	X	PARAPET VERT. @ WINGS
R506	X				PARAPET HORIZ. BOT. @ WINGS
R707	X				PARAPET HORIZ. TOP @ WING
R508	X		4-9	X	PARAPET HORIZ. @ LIGHT STD.
R509	X		9-6	X	PARAPET VERT. @ LIGHT STD.
R510	X		4-9	X	PARAPET VERT. @ LIGHT STD.
R511	X		7'-7"	X	PARAPET VERT. @ LIGHT STD.
R512	X		4-3	X	PARAPET VERT. @ LIGHT STD.

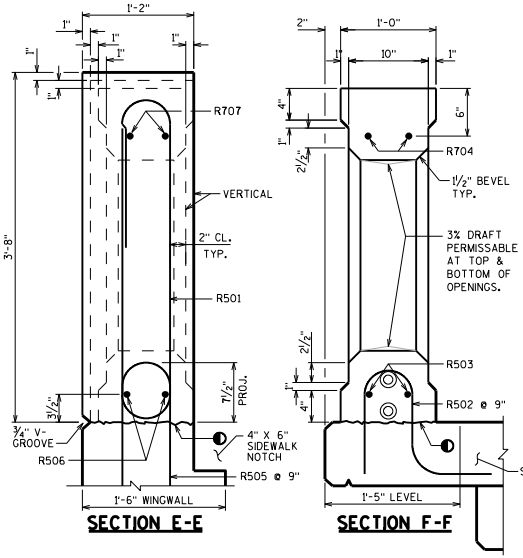

SECTION E-E | SECTION F-F | SECTION G-G

BENCH MARK CAP (WHEN SUPPLIED). AVOID PLACING A BENCH MARK CAP BELOW A RAIL OR FENCE SYSTEM THAT IS ATTACHED TO THE TOP OF THE PARAPET.

WEIGHT = 350 LB/FT (EXCLUDING PILASTERS.)

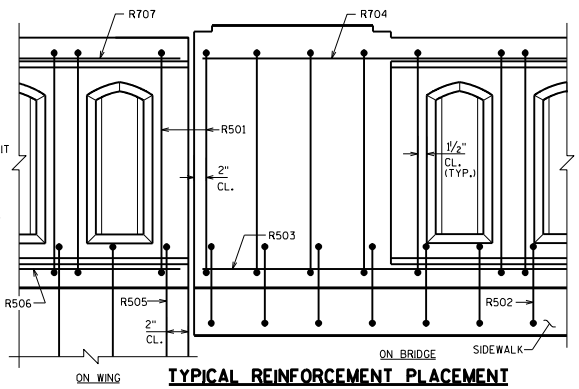

TYPICAL REINFORCEMENT PLACEMENT

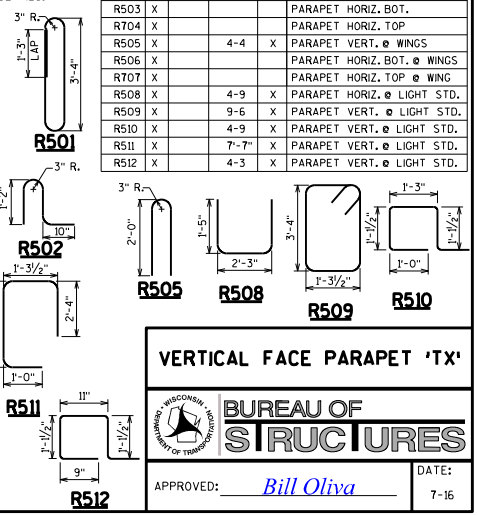

VERTICAL FACE PARAPET 'TX'

BUREAU OF STRUCTURES

APPROVED: Bill Oliva

DATE: 7-16

STANDARD 30.19