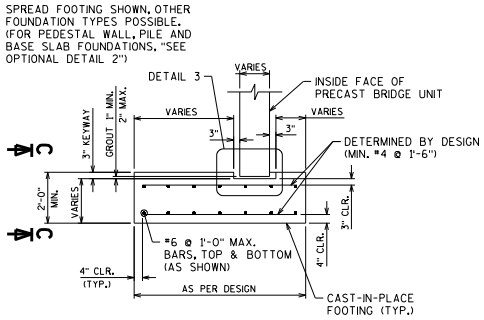

DETAIL 2

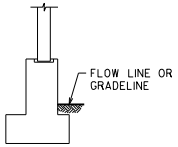

OPTIONAL DETAIL 2

IF PEDESTAL IS REQUIRED

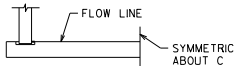

OPTIONAL DETAIL 2

IF BASE SLAB IS REQUIRED

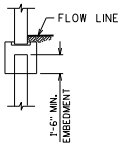

OPTIONAL DETAIL 2

IF PILES ARE REQUIRED

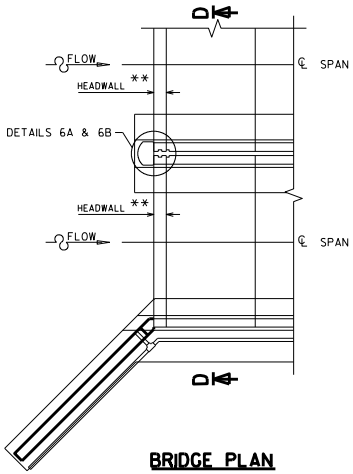

BRIDGE PLAN

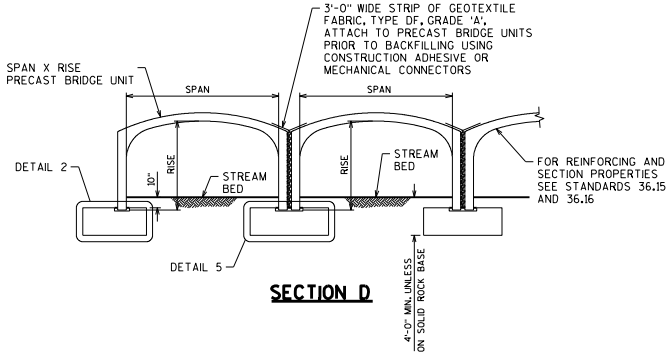

SECTION D

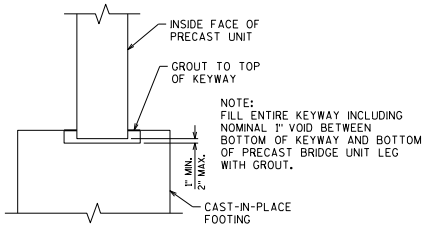

DETAIL 3

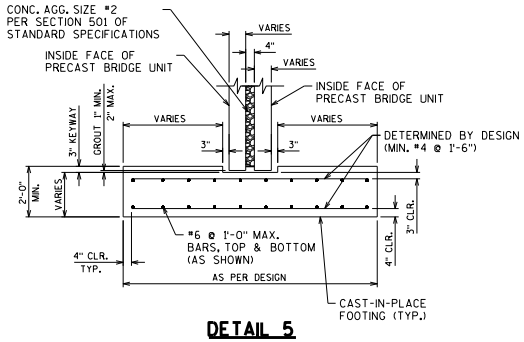

DETAIL 5

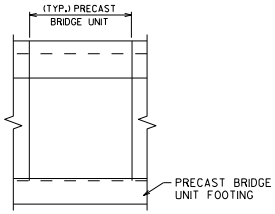

SECTION C

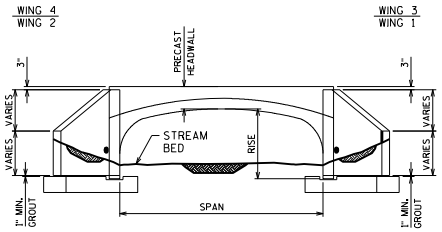

TYPICAL END ELEVATION

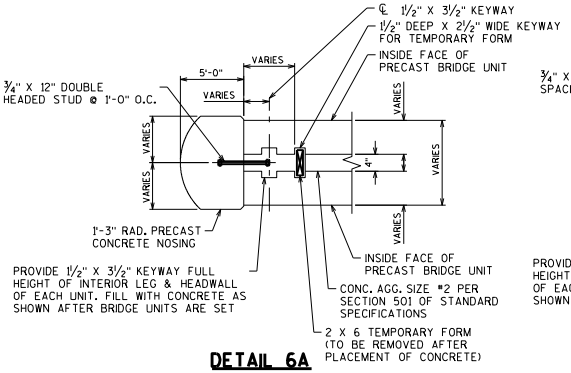

DETAIL 6A

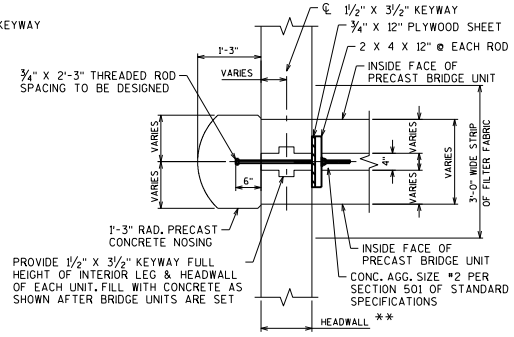

DETAIL 6B

NOTES:

**SEE STANDARDS 36.13 AND 36.14 FOR HEADWALL DETAILS AND FEASIBILITY GUIDELINES

PRECAST THREE-SIDED BOX CULVERT DETAILS

STATE OF WISCONSIN
DEPARTMENT OF TRANSPORTATION
STRUCTURES DEVELOPMENT SECTION

APPROVED: Scot Becker

DATE: 7-11

STANDARD 36.12