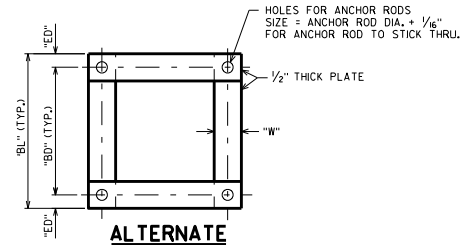

ALTERNATE

ANCHOR PLATE/TOP TEMPLATE

PLAN VIEW

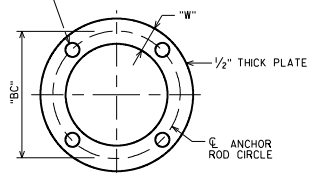

ANCHOR PLATE/TOP TEMPLATE

PLAN VIEW

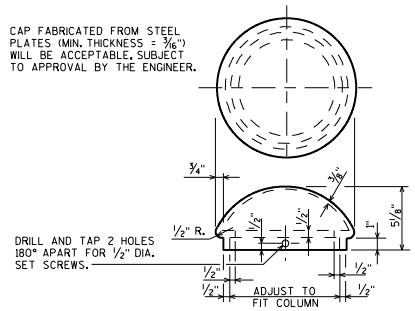

TOWER CAP DETAIL

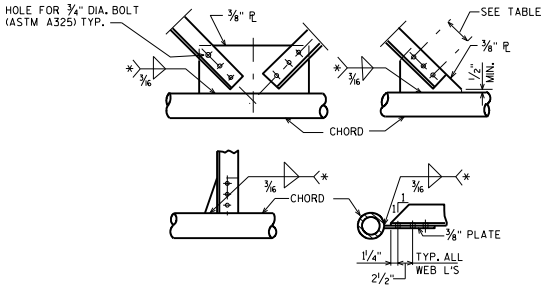

TYPICAL TRUSS CONNECTION DETAILS

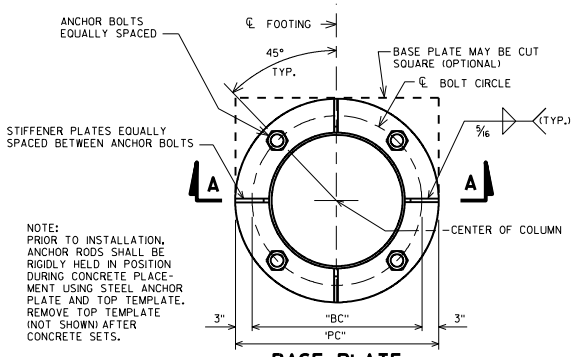

BASE PLATE

PLAN VIEW

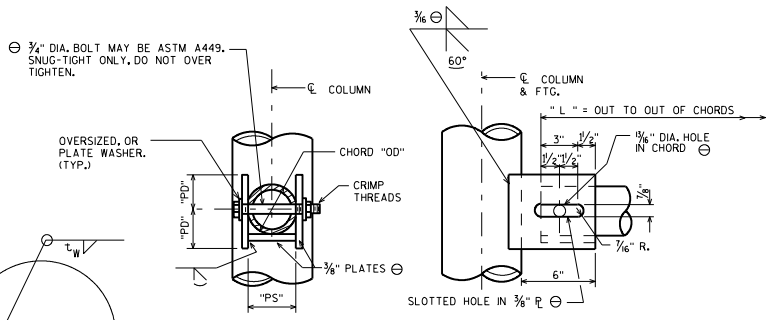

TOWER CONNECTION DETAIL

BOLT, PLATE & HOLE DETAILS SHOWN ARE MIN.

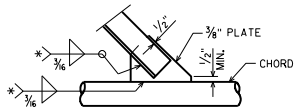

TYPICAL WELDED ALTERNATE

DESIGN DATA

WEB MEMBERS & BOXED ENDS

ANGLE SIZE	*WELD LENGTH	NO. OF BOLTS
● 2 1/2"×2 1/2"×1/4"	11"	3
3"×3"×3/16"	10"	3
3"×3"×1/4"	13"	4
3"×3"×5/16"	16 1/2"	5
3"×3"×3/8"	19 1/2"	6
4"×4"×1/4"	18"	5
4"×4"×5/16"	22"	6
4"×4"×3/8"	26"	8
4"×4"×7/16"	30"	9
4"×4"×1/2"	34"	10

● ONLY USED FOR BOXED ENDS AND TRANSVERSE WEBS.

OTHER DATA

"BC" = COLUMN "OD" + 6"
"PC" = COLUMN "OD" + 1'-0"
"W" = 2 × (ANCHOR ROD DIA.)
"BD" = "BC" × COS(45°)
"ED" = "W"/2
"BL" = "BD" + "W"
"PD" = (CHORD "OD")/2 + 3/4"
"PS" = CHORD "OD" + 3/16"

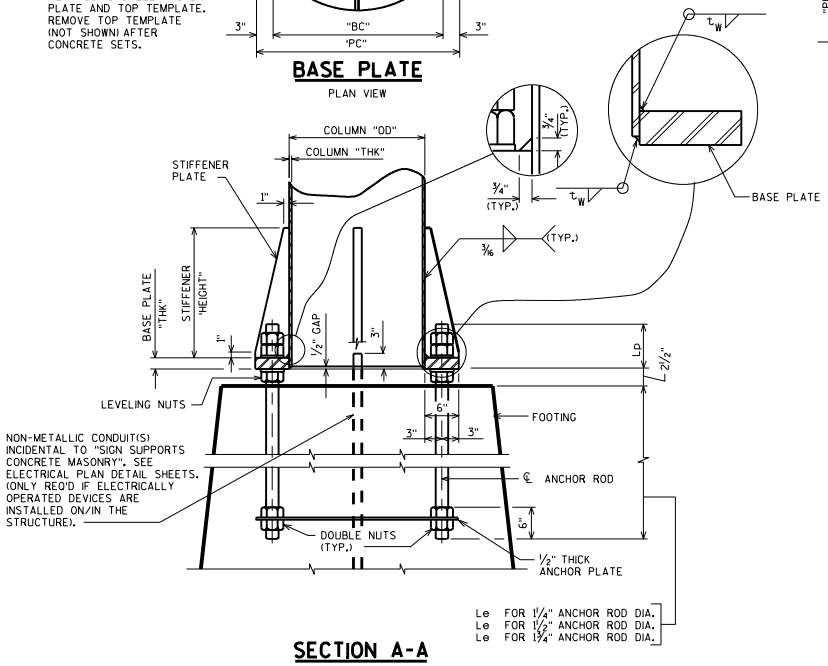

SECTION A-A

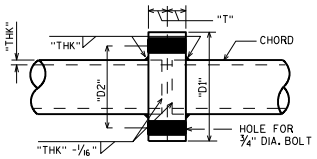

COUPLING DETAIL

CONTRACTOR SHALL PROVIDE #16 GA. GALVANIZED STEEL SHIMS, AS REQUIRED TO PROVIDE FOR CAMBER

4-CHORD SIGN BRIDGE DETAILS

BUREAU OF STRUCTURES

APPROVED: Bill Oliva

DATE: 1-17

STANDARD 39.03