| ANGLE SIZE | *WELD LENGTH (MIN.) |
|---|---|
| L 2½"×2½"×¼" | 7" |
| L 3"×3"×¼" | 8" |

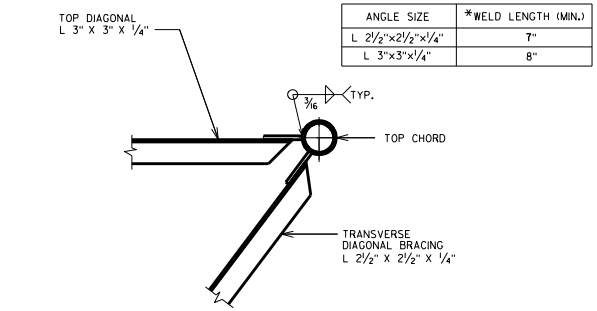


SECTION B-B

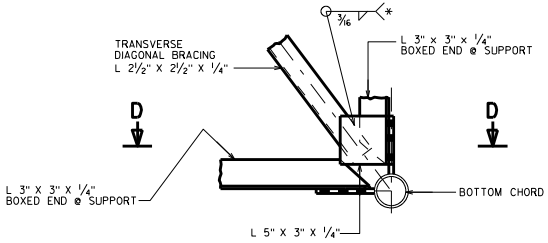


SECTION C-C

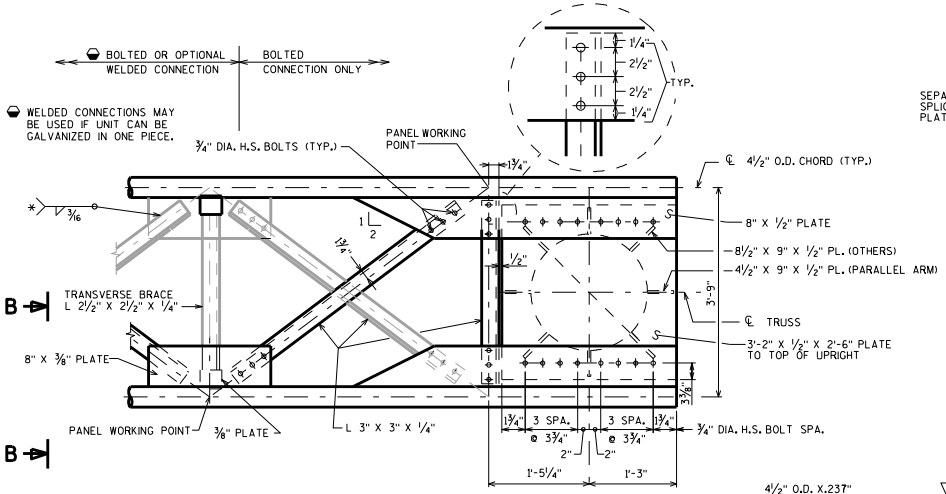


PLAN TRUSS TO UPRIGHT

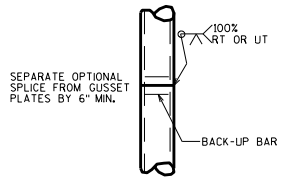


OPTIONAL COLUMN OR CHORD SPLICE DETAIL

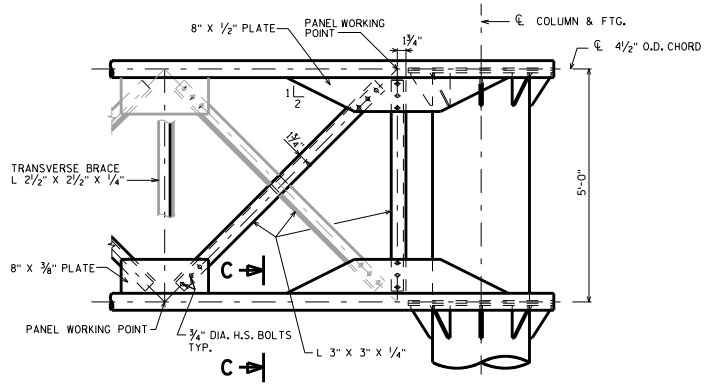


ELEVATION TRUSS TO UPRIGHT

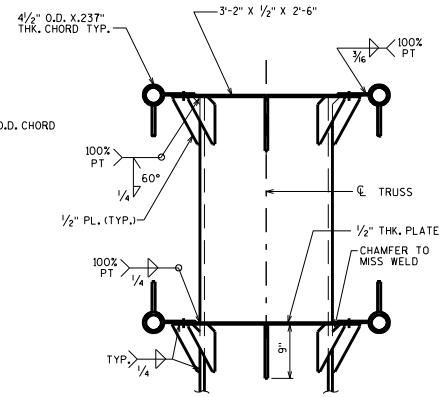


END VIEW
TRUSS TO UPRIGHT

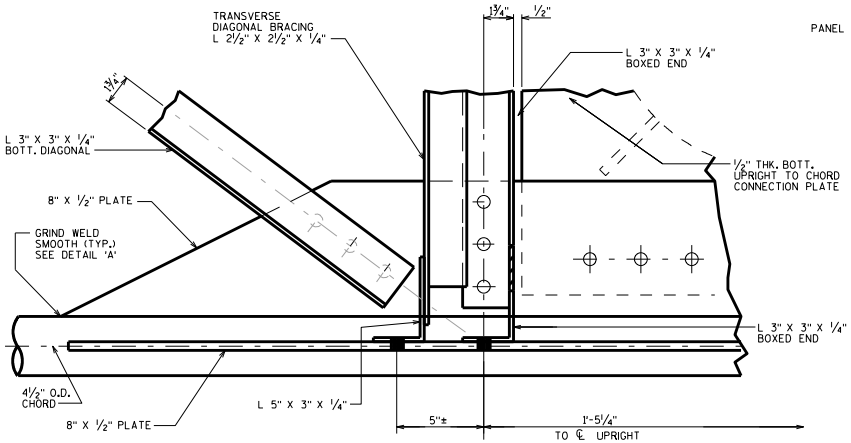


SECTION D-D

( LOOKING DOWN @ BOTT. HORIZ. PLANE @ FRONT CHORD )

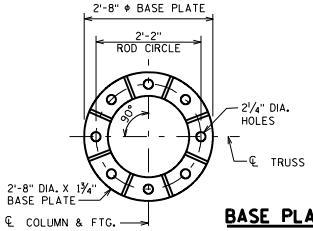


BASE PLATE DETAILS

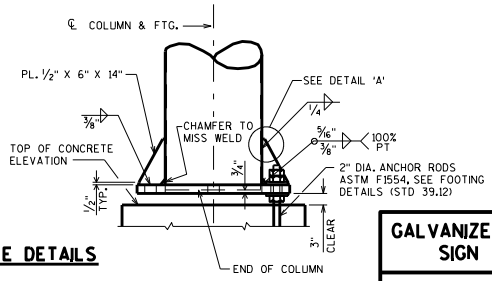


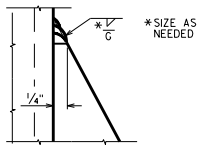


DETAIL 'A'

GALVANIZED STEEL CANTILEVER
SIGN TRUSS DETAILS

STATE OF WISCONSIN
DEPARTMENT OF TRANSPORTATION
STRUCTURES DEVELOPMENT SECTION

APPROVED: Bill Oliva

DATE: 7-16

STANDARD 39.11