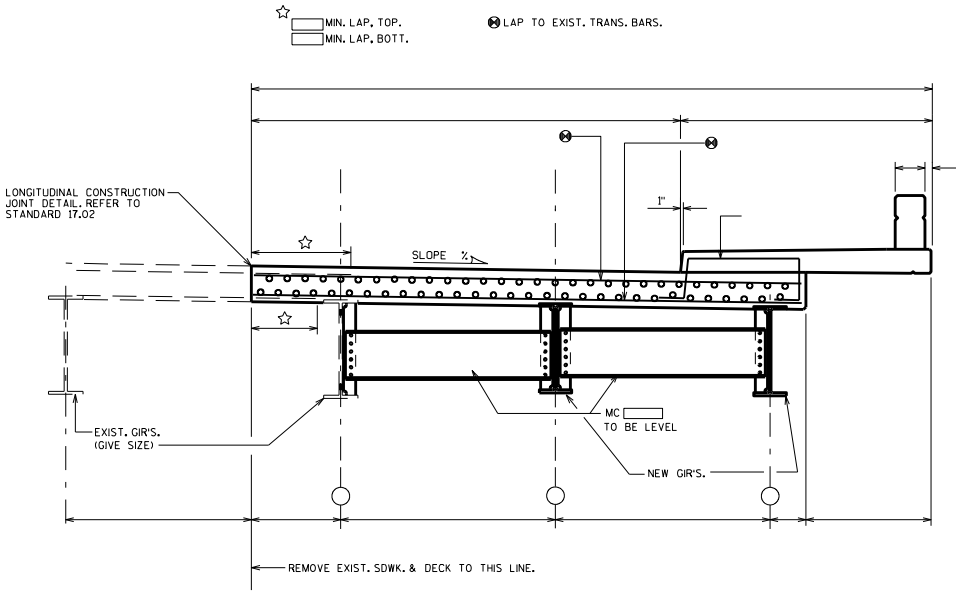

CROSS SECT. THRU RDWY.

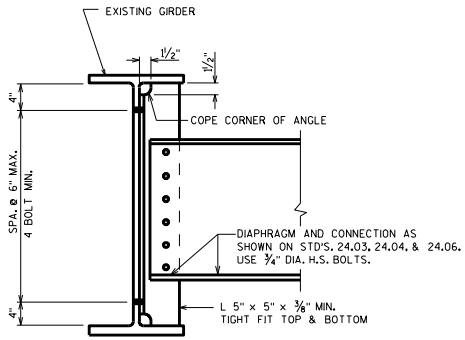

DIAPHRAGM CONNECTION TO EXISTING STEEL GIRDER

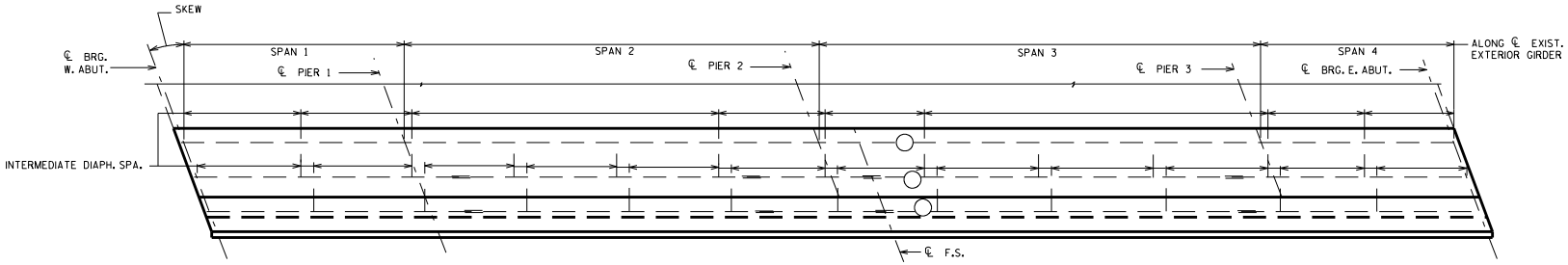

PLAN

SLAB WIDENING	
STATE OF WISCONSIN DEPARTMENT OF TRANSPORTATION STRUCTURES DEVELOPMENT SECTION	
APPROVED: Bill Oliva	DATE: 7-16

STANDARD 40.07