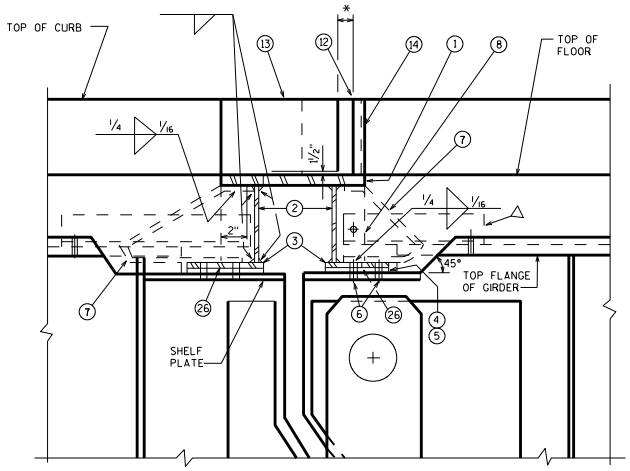

SECTION THRU JOINT

MUD PLATES NOT SHOWN

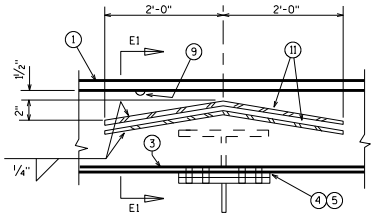

SECTION THRU MUD PLATES

TYPICAL ALL GIRDERS

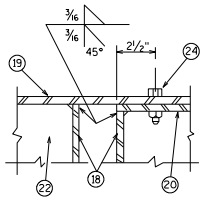

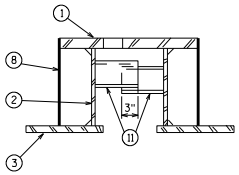

SECTION E1

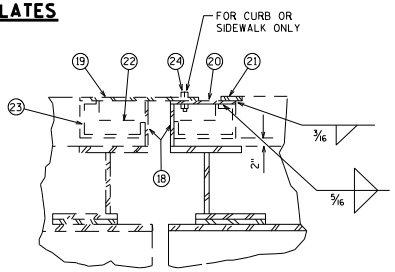

SECTION A-A

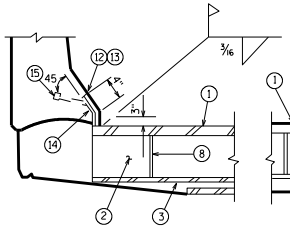

DETAIL AT PARAPET

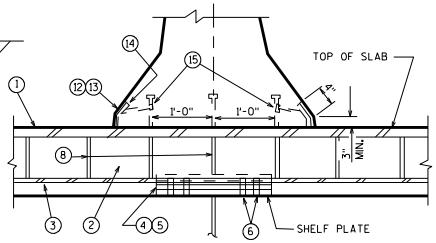

DETAIL AT MEDIAN

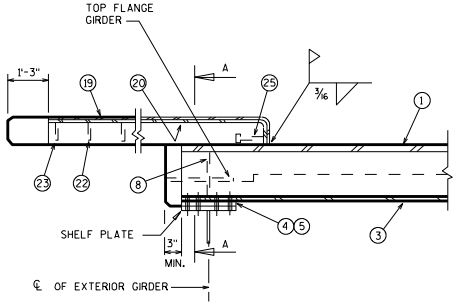

SECTION THRU SIDEWALK

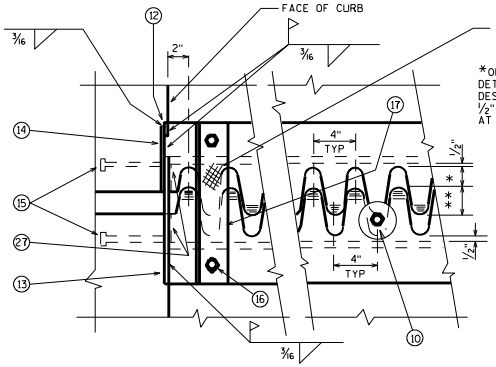

*OPENING AT 45° F. TO BE DETERMINED BY DESIGN. MIN. DESIGN OPENING AT +120° F. IS ½" MAX. DESIGN OPENING AT -30° F. IS 7".

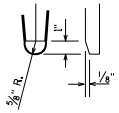

FINGER DETAIL

** 1" MIN. LAP OF FINGERS AT -30° F.

PART PLAN OF FINGER PLATE AT BRUSH CURB

NO SKEW

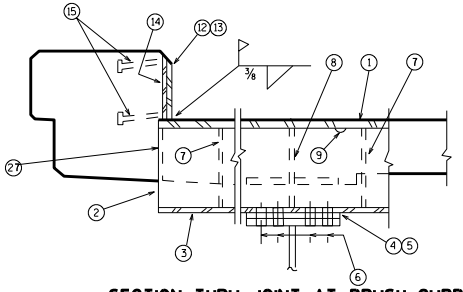

SECTION THRU JOINT AT BRUSH CURB

MUD PLATES NOT SHOWN

△ ANGLE 3½" x 3½" x 5/16" FIELD DRILL ¾" DIA. ERECTION BOLT HOLES OR WELD TO STIFFENER OR TOP FLG.

LEGEND

1. FINGER PLATE. SIZE TO BE DETERMINED BY DESIGN.
2. WEB PLATE. SIZE TO BE DETERMINED BY DESIGN.
3. FLANGE PLATE. SIZE TO BE DETERMINED BY DESIGN.
4. BEVELED SHIM PLATE ⅜" THICK. 15/16" DIA. HOLES FOR NO. 6.
5. ¾" LAMINATED SHIM WITH SLOTTED OPENINGS
6. ¾" DIA. ERECTION BOLTS. DRILL HOLES IN SHELF PLATE IN THE FIELD.
7. ANCHOR BAR ⅝" DIA. AT 1'-0" CENTERS. BEND AS SHOWN.
8. STIFFENER BAR ⅜" THICK. ¼" FILLET WELD ALL AROUND. PLACE AT ℄ OF GIRDER AND AT +2'-0" CENTERS BETWEEN GIRDERS.
9. ⅞" VENT HOLES AT 3'-0" CENTERS.
10. ¾" DIA. ADJUSTING BOLT AT APPROX. 4'-0" CENTERS WITH TWO 9/16 DIA. X ⅜" PLATE WASHERS. ONE ON EACH SIDE OF FINGER PLATE.
11. MUD PLATE ¼" THICK
12. ⅜" PLATE. BEND AS SHOWN.
13. ⅜" PLATE BEND AS SHOWN.
14. ⅜" PLATE BEND AS SHOWN.
15. ⅝" DIA. STUDS X 6 5/16" LONG. WELD TO PLATES NO. 13 AND NO. 14.
16. ¾" DIA. BOLT FOR SHIPPING. TACK WELD NUT TO BOTTOM OF PLATE NO. 1.
17. 3" DIA. X 3" DIA. X ¼" + 5'-0" SPACING. SLOTTED HOLE ⅞" X 2⅜" IN ONE END OF ANGLE AS SHOWN. FOR BOLT NO. 16.
18. CLOSING PLATE ⅜" CUT AS SHOWN. SEE WELD DETAIL
19. ⅜" PLATE. BEND AS SHOWN.
20. ⅜" PLATE. BEND AS SHOWN.
21. ⅜" PLATE. BEND AS SHOWN.
22. ⅜" PLATE. WELD ALL AROUND. ¼" FILLET WELD TO PLATES NO. 18. 19. & 20.
23. ⅝" DIA. STUDS X 6 5/16" LONG. BEND AFTER WELD.
24. ¾" DIA. BOLT WITH SQ. NUT. GREASE FOR EASY REMOVAL. ⅞" X 1¾" SLOTTED HOLE IN PL. NO. 19. LONG DIMENSION OF HOLE PARALLEL TO ℄ OF ROADWAY. TACK WELD NUT TO PLATE NO. 20 + 2'-0" SPA.
25. ⅝" DIA. STUDS X 6 5/16" LONG. WELD TO PLATE NO. 20.
26. FLANGE PLATE. SAME THICKNESS AS PLATE NO. 3 AND SAME WIDTH AS SHELF PLATE. SHOP BUTT WELD TO PLATE NO. 3.
27. ⅜" CLOSING PLATE. WELD TO PLATES NO. 1 AND NO. 2.

NOTES

REMOVE ANGLE NO. 17 AND ADJUSTING BOLT NO. 10 AFTER VERTICAL AND HORIZONTAL ALIGNMENT IS SECURE IN FIELD. FILL HOLES WITH HOT POURED JOINT SEALER.

IN SOME CASES THE GIRDER FLANGES AND WEB PLATES DO NOT HAVE TO BE CUT TO ACCOMMODATE THE FINGER JOINT SECTION. THE SLAB DEPTH MAY BE UTILIZED EFFECTIVELY.

FINGER TYPE EXPANSION JOINT - PLATE GIRDER

STATE OF WISCONSIN
DEPARTMENT OF TRANSPORTATION
STRUCTURES DEVELOPMENT SECTION

APPROVED: Bill Oliva

DATE: 7-16

STANDARD 40.12