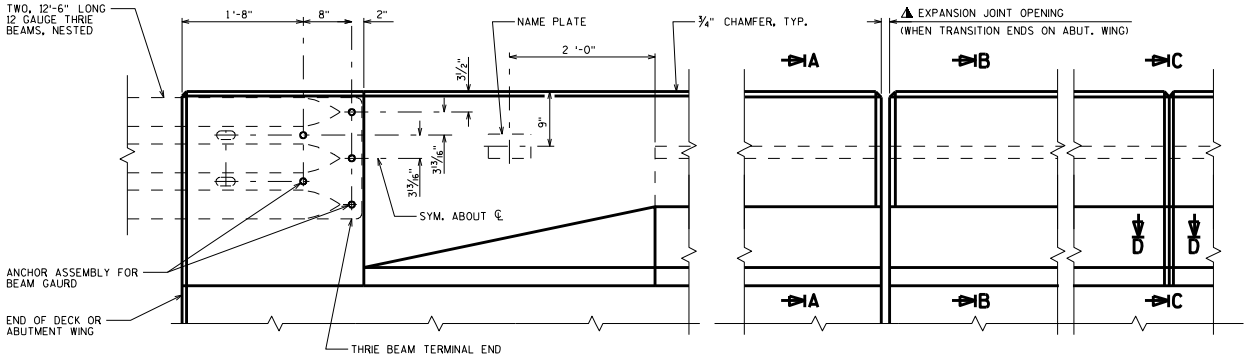

ELEVATION OF PARAPET

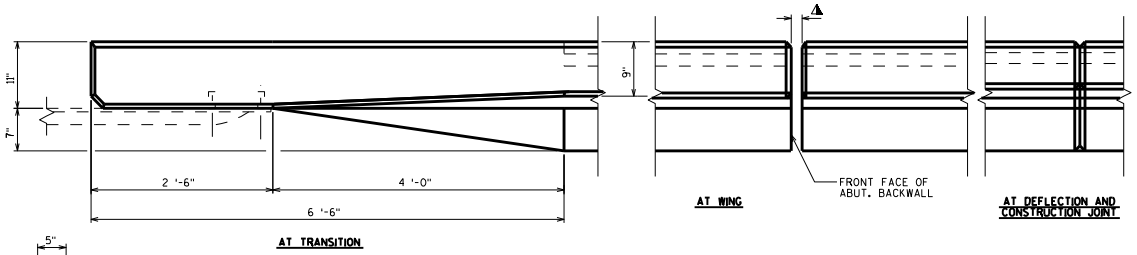

PART PLAN ON PARAPET

NOTES

ALL SLOPED FACE PARAPET "B" REINFORCEMENT ARE NO. 4 BARS UNLESS OTHERWISE SHOWN.

⊗ PLATE REQUIRED WHEN DEFLECTION JOINTS ARE REQUIRED. IF CONSTRUCTION JOINTS IN PARAPETS ARE USED, PLATE SEPARATORS SHALL BE OMITTED. DEFLECTION JOINTS ARE REQUIRED ON SLAB SPAN STRUCTURES ONLY.

OPTIONAL CONSTRUCTION JOINTS IN THE PARAPETS MAY BE USED. RUN BAR REINFORCEMENT THRU THE JOINT. LAP LONGIT. BARS A MIN. OF 2'-11". MIN. JOINT SPACING OF 80'-0". DEFINE CONST. JOINT WITH A 1" 'V' GROOVE.

⊗ CONST. JOINT - STRIKE OFF AS SHOWN & FINISH WITH A WOODEN TROWEL.

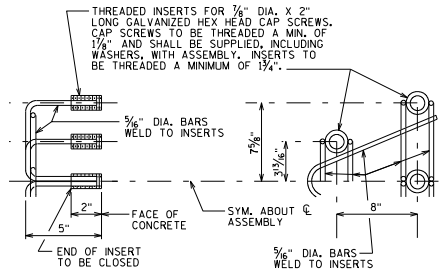

DETAIL OF ANCHOR ASSEMBLY

NOTE: HEX HEAD CAP SCREWS & WASHERS TO BE GALVANIZED IN ACCORDANCE WITH AASHTO M232, CLASS C.

ASSEMBLY SHALL BE BID ITEM "ANCHOR ASSEMBLIES FOR STEEL PLATE BEAM GUARD" EACH - ☐

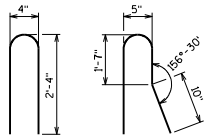

BAR$_A$

BAR$_E$

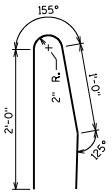

BAR$_B$

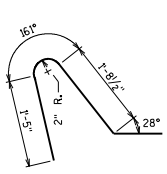

BAR$_C$

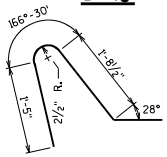

BAR$_D$

BAR	LENGTH
A	4'-10"
B	4'-7"
C	4'-3"
D	4'-4"
E	4'-4"

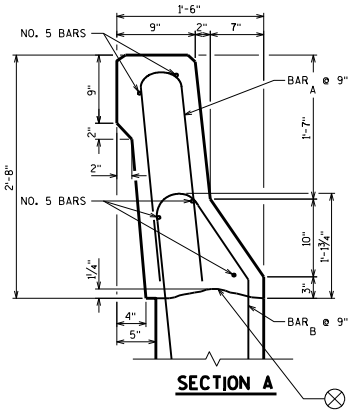

SECTION A

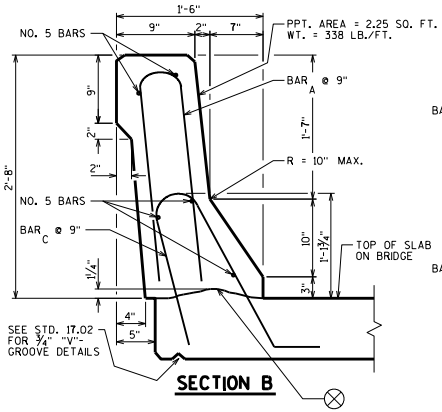

SECTION B

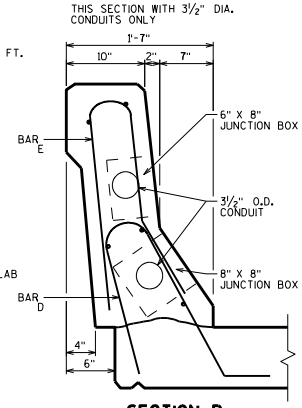

SECTION B$_1$

SEE SECTION B FOR DETAILS UNLESS OTHERWISE SHOWN OR NOTED

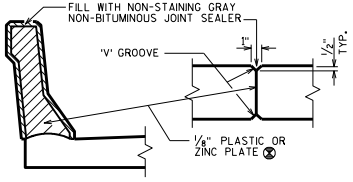

SECTION C

SECTION D

SLOPED FACE
PARAPET 'B'

STATE OF WISCONSIN
DEPARTMENT OF TRANSPORTATION
STRUCTURES DEVELOPMENT SECTION

APPROVED: Bill Oliva

DATE: 7-13

STANDARD 40.15