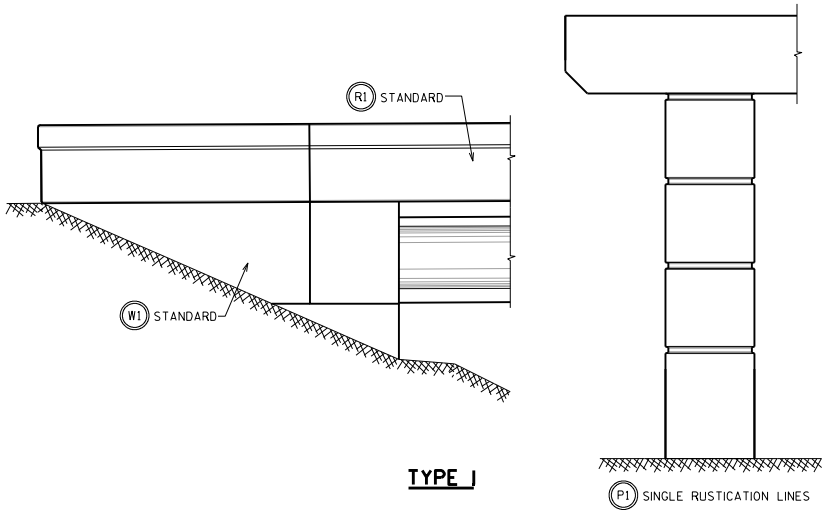

TYPE I

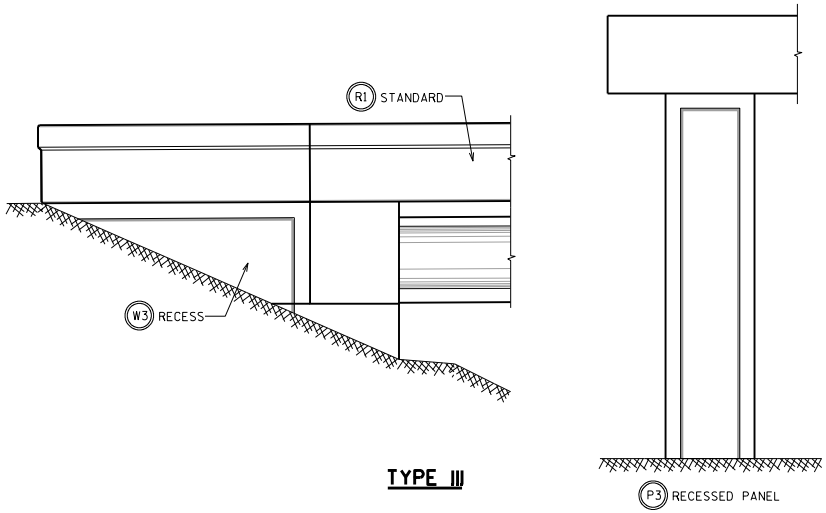

TYPE III

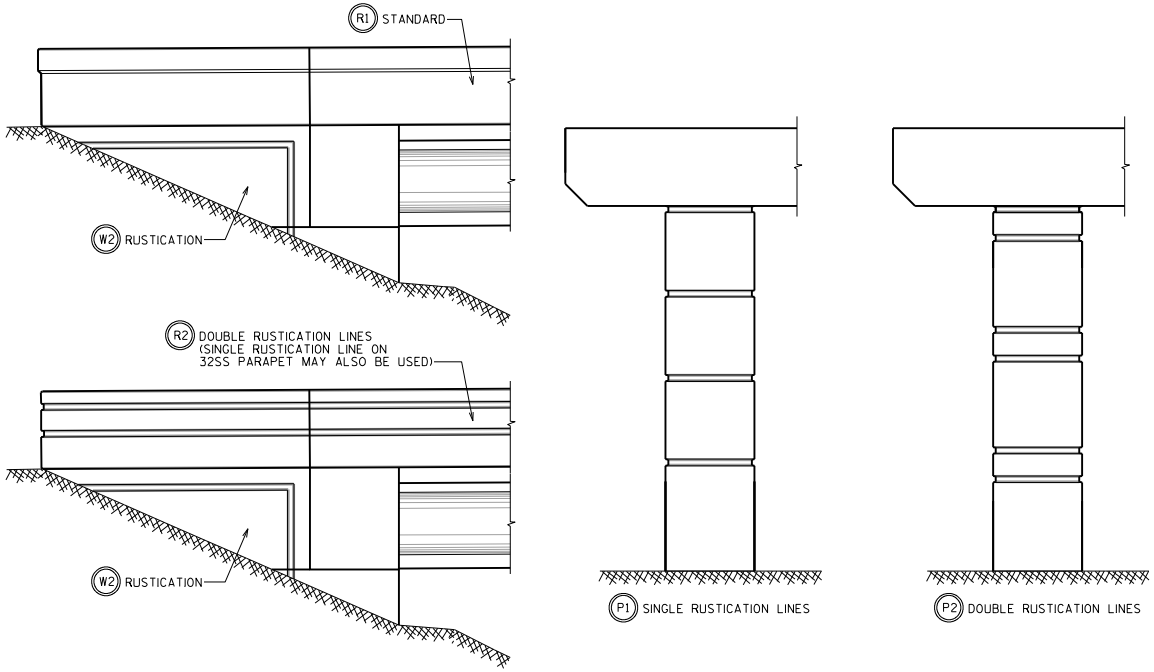

TYPE II

DESIGNER NOTES

THE THREE TYPES SHOWN ARE PREFERRED AESTHETIC CONCEPTS FOR WISDOT PROJECTS. WHEN USED WITHOUT STAINING, COSTS ARE INCIDENTAL TO "CONCRETE MASONRY BRIDGES" AND NOT SUBJECT TO CSS FUNDING.

ONLY THE CHOICE OF PARAPET, WING AND PIER DETAILS SHOWN FOR A GIVEN TYPE SHOULD BE USED FOR THAT TYPE.

WINGS PARALLEL TO CENTERLINE OF ABUTMENT (ELEPHANT EAR) ARE TO BE PLAIN (TYPE I).

SEE STANDARDS 4.04 AND 4.05 FOR ADDITIONAL DETAILS.

SEE BRIDGE MANUAL SECTION 4.9 FOR LOCATION OF USE AND RENDERINGS.

AESTHETIC CONCEPTS WITHOUT PEDESTRIAN ACCOMMODATIONS

STATE OF WISCONSIN
DEPARTMENT OF TRANSPORTATION
STRUCTURES DEVELOPMENT SECTION

APPROVED: Bill Oliva

DATE: 7/15

STANDARD 4.02