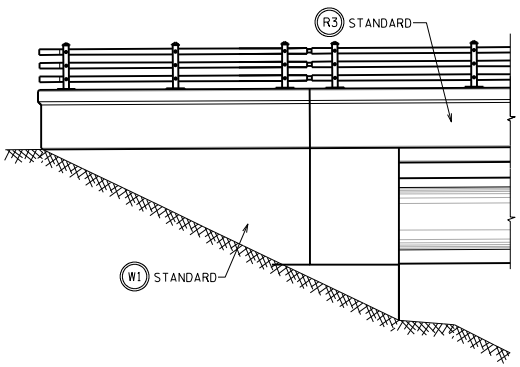


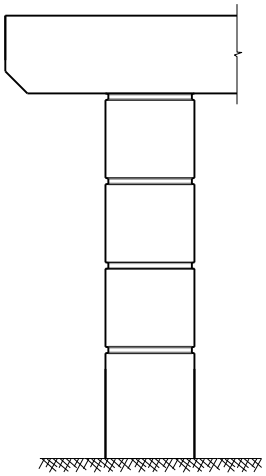

TYPE I

P1 SINGLE RUSTICATION LINES

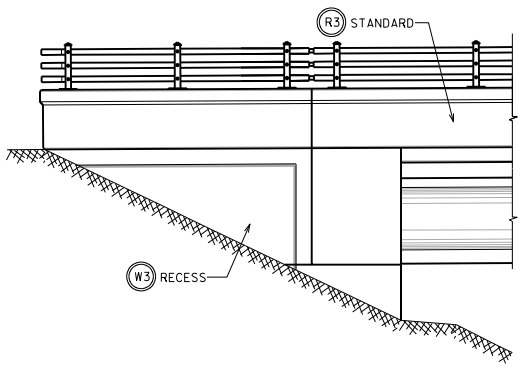


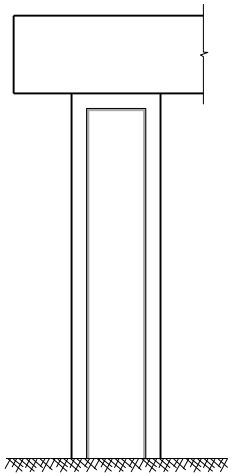

TYPE III

P3 RECESSED PANEL

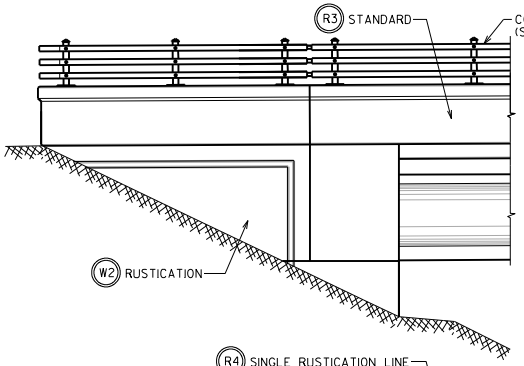


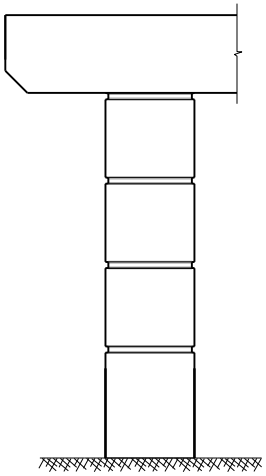

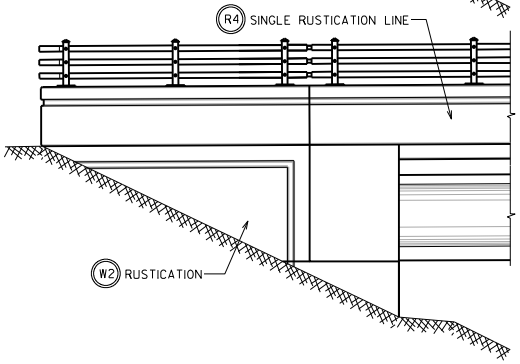


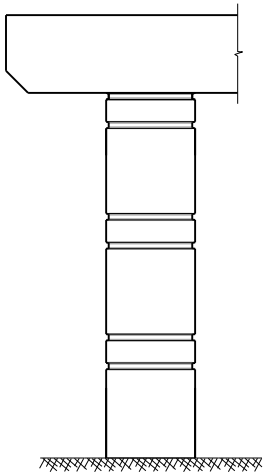

P1 SINGLE RUSTICATION LINES

P2 DOUBLE RUSTICATION LINES

TYPE II

## DESIGNER NOTES

THE THREE TYPES SHOWN ARE PREFERRED AESTHETIC CONCEPTS FOR WISDOT PROJECTS. WHEN USED WITHOUT STAINING, COSTS ARE INCIDENTAL TO "CONCRETE MASONRY BRIDGES" AND NOT SUBJECT TO CSS FUNDING.

ONLY THE CHOICE OF PARAPET, WING AND PIER DETAILS SHOWN FOR A GIVEN TYPE SHOULD BE USED FOR THAT TYPE.

WINGS PARALLEL TO CENTERLINE OF ABUTMENT (ELEPHANT EAR) ARE TO BE PLAIN (TYPE I).

IN LIEU OF THE 'COMBINATION RAILING TYPE '3T" SHOWN, CHAIN LINK FENCING MAY BE USED. SEE STANDARD 4.04 FOR DETAILS.

SEE STANDARDS 4.04 AND 4.05 FOR ADDITIONAL DETAILS.

SEE BRIDGE MANUAL SECTION 4.9 FOR LOCATION OF USE AND RENDERINGS.

**AESTHETIC CONCEPTS WITH PEDESTRIAN ACCOMMODATIONS**

BUREAU OF STRUCTURES

APPROVED: Bill Oliva

DATE: 7-15

STANDARD 4.03