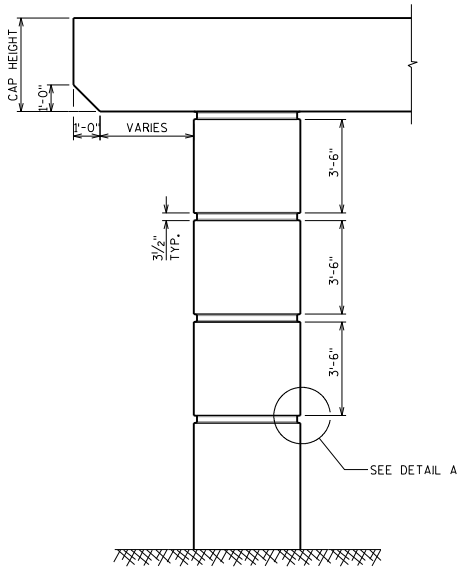

P1 SINGLE RUSTICATION LINES

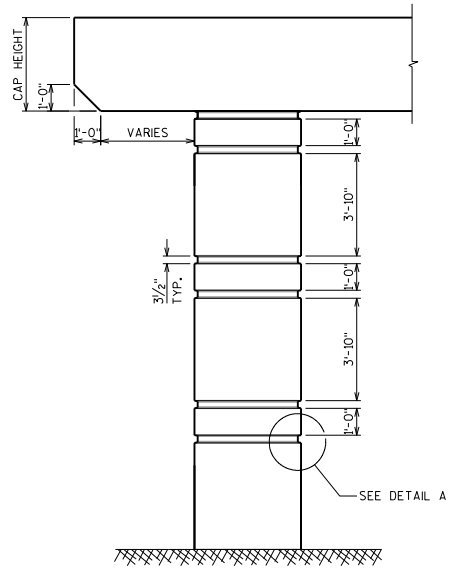

P2 DOUBLE RUSTICATION LINES

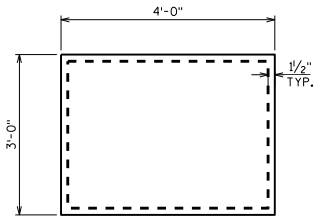

SECTION THRU COLUMN

SINGLE RUSTICATION LINES AND DOUBLE RUSTICATION LINES

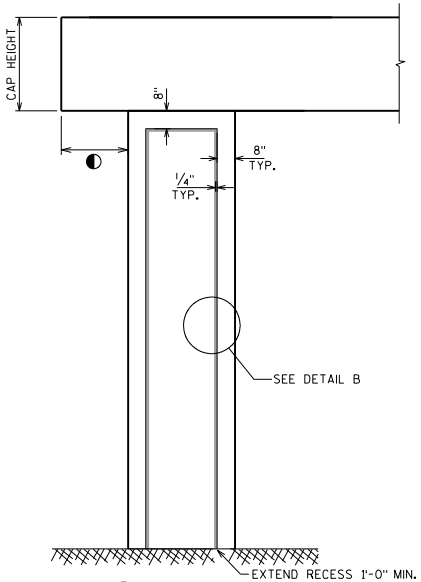

P3 RECESSED PANEL

◐ DIM. = APPROXIMATELY ¾ CAP HEIGHT

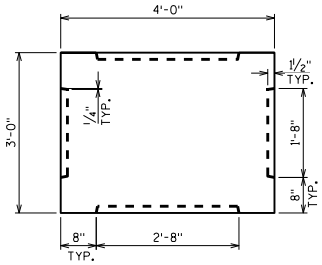

SECTION THRU COLUMN

RECESSED PANEL

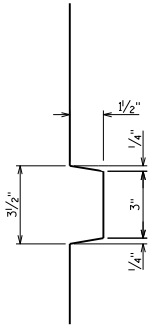

DETAIL A

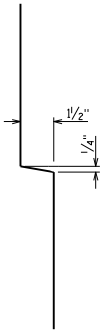

DETAIL B

MULTI-COLUMNED PIER AESTHETIC DETAILS

STATE OF WISCONSIN
DEPARTMENT OF TRANSPORTATION
STRUCTURES DEVELOPMENT SECTION

APPROVED: Bill Oliva

DATE: 7-15

STANDARD 4.05

SCALE 2.5