NOTES

DRAWINGS SHALL NOT BE SCALED.

ALL GRS ABUTMENT STATIONING AND OFFSETS ARE GIVEN AT THE FRONT FACE OF THE 'ALIGNMENT KEYBLOCK'. SEE SECTIONS A-A AND B-B ON STANDARD 7.02 FOR LOCATION OF THE 'ALIGNMENT KEYBLOCK'.

FACTORED BEARING RESISTANCE OF XX PSF AT BOTTOM OF REINFORCED SOIL FOUNDATION.

◐ MAXIMUM ALLOWABLE WALL BATTER IS 8 VERTICAL TO 1 HORIZONTAL OR 7.1 DEGREES.

PROTECT MODULAR BLOCK DURING PLACEMENT OF HEAVY RIPRAP.

SEE SECTIONS A-A AND B-B AND 'GRS ABUTMENT INFORMATION' TABLE ON STANDARD 7.02 FOR REQUIRED LENGTHS OF GEOTEXTILE REINFORCEMENT.

◪ PROVIDE CORNER BLOCKS AND/OR DETAILS COMPATIBLE WITH THE SELECTED MODULAR BLOCK SYSTEM. ROUNDED CORNERS ARE ALLOWABLE.

TEMPORARY FALSEWORK NOT TO BE SUPPORTED ON THE GRS ABUTMENT UNLESS APPROVED BY THE BUREAU OF STRUCTURES DEVELOPMENT SECTION.

DESIGNER NOTES

THE USE OF GRS ABUTMENTS IS SUBJECT TO PRIOR APPROVAL BY THE BUREAU OF STRUCTURES.

☆ PROVIDE AN ADEQUATE WORKING WIDTH FOR GUARDRAIL DEFLECTION PER FDM REQUIREMENTS. MINIMUM WIDTH SHALL BE 6'-6" FROM FRONT FACE OF THRIE BEAM TO FRONT FACE OF WALL.

MAXIMUM SKEW ANGLE IS 15°.

THE TOP OF THE CONTRAST-COLORED BLOCKS SHALL BE 2-3 BLOCK COURSES BELOW THE TOP OF RIPRAP ELEVATION.

◭ NAME PLATE TO BE LOCATED ON THE OUTSIDE OF THE FIRST RIGHT GRS ABUTMENT WHEN TRAVELING UPSTATION (FOR OPEN RAILINGS).

THE MINIMUM REQUIRED TENSILE STRENGTH OF THE GEOSYNTHETIC REINFORCEMENT SHALL BE SHOWN WITHIN THE SPECIAL PROVISION, 'GEOSYNTHETIC REINFORCED SOIL ABUTMENT'.

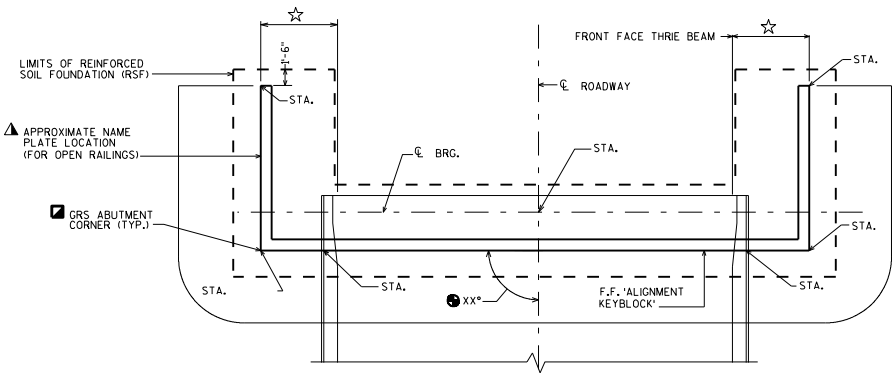

PLAN

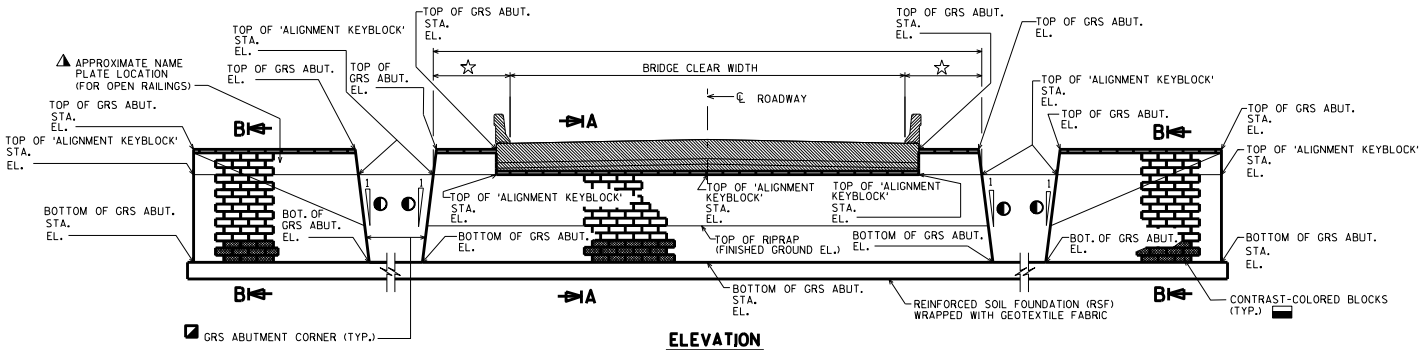

ELEVATION

(SHOWING FRONT FACE OF GRS ABUTMENT)

SECTIONS A-A AND B-B ARE SHOWN ON STANDARD 7.02

TABLE OF GRS ABUTMENT STATIONS AND ELEVATIONS

GRS ABUT. STA.	ROADWAY ALIGN. STA.	ROADWAY STATION OFFSET (FT)	OFFSET DIR.	GRS ABUT. HT. (FT)	BOT. GRS ABUT. EL.	FINISHED GROUND EL.	TOP GRS ABUT. EL.

NOTE: STATIONS AND OFFSETS GIVEN AT FRONT FACE OF 'ALIGNMENT KEYBLOCK' AND AT ELEVATION XX.XX. THESE STATIONS AND OFFSETS SHALL BE HELD REGARDLESS OF ACTUAL MODULAR BLOCK SIZE OR GRS ABUTMENT BATTER.

GRS ABUTMENT GENERAL PLAN

STATE OF WISCONSIN
DEPARTMENT OF TRANSPORTATION
STRUCTURES DEVELOPMENT SECTION

APPROVED: Bill Oliva

DATE: 7-16

STANDARD 7.01