45.3.1 Design Process

In the HAR design process, the designer must follow several steps to ensure successful implementation and proper operational capabilities. For AM broadcast HAR portable sites, site selection is critical to the success of the installation. Sufficient time must be allowed for and adequate data must be collected to ensure an adequate design, follow the steps in Table 45.1 for the design process.

45.3.1.1 Determination of Type

The typical HAR type for Wisconsin application is the 10-watt AM HAR installation and Portable HAR.

10-Watt HAR is used for permanent installations, and portable HAR is used for temporary HAR applications, such as construction management and special events. Portable HAR has less broadcast range than 10-Watt HAR.

HAR Synchronization should be considered if there are possibilities that two or more HAR deployments will overlap in broadcast areas. This is an added feature to any HAR transmitter, and is not affected by site placement.

45.3.1.2 Site Selection

The site selection issues discussed in this section are intended to provide the Wisconsin DOT with appropriate guidelines to follow when designing and implementing HAR stations. These guidelines will provide techniques to best utilize each HAR station, as well as the entire network of stations. Cost reduction procedures will be detailed pertaining to HAR implementation.

45.3.1.3 Alternate Routes and Diversion Points

When locating new HAR transmitter sites, two primary site selection criteria are typically considered: the availability of alternate routes (ideally parallel routes to the freeway) and the presence of diversion points (easy entrance and exit points to the alternate routes). These considerations are similar to site selection considerations for VMS.

There are two different types of alternate route possibilities, limited access freeway and local streets.

- Limited Access Freeways - A primary alternate route should be a freeway parallel to the principal route. An example of this situation would be the IH-94/894/43 central loop in Milwaukee. A motorist traveling from the Zoo Interchange to the airport has two freeway options: I-894 around the west and south legs of the loop, or I-94 to downtown, then south to the airport
- Local Streets - Secondary alternate routes include US highways, state highways, county highways, or local city streets. Such routes would probably be more prevalent than alternate routes on limited access freeways

For the alternate route to be successful, the alternate route must be able to accommodate the additional capacity needed due to the HAR message recommendation, and use of the recommended alternate route should cause savings in travel time. The following guidelines should be followed to assess travel time/distance comparisons between primary and alternate routes:

- Under free-flow conditions, the travel time along the alternate route should not be more than double the free-flow travel time along the diversion section.
- The travel distance of an alternate route along limited access freeways should not be more than double the distance of the diversion section.
- The travel distance of the alternate route along a local street should not be more than 1.5 times the distance of the diversion section.

Following these guidelines increases the probability that the motorist will be willing to use the alternate route. Appropriate local agencies must be involved when the alternate route involves local streets to build consensus that the alternate route is appropriate and to ensure that appropriate traffic signal timing modifications are developed and stored for implementation when circumstances warrant.

45.3.1.4 Additional Site Criteria

More detailed, site-specific criteria are involved in the final design of an AM HAR transmitter sites. These

criteria address the ground system, ground plane, and antenna location. When designing an AM HAR site, the main objectives are to minimize interference and maximize the range of the HAR station. While those same objectives exist for an FM HAR site, satisfying those objectives is much simpler due to the different transmission characteristics of FM radio.

45.3.1.5 Ground System

The ground system is the area from the HAR antenna upstream and downstream along the roadway for approximately 3 miles. Well-selected sites, with good ground system properties, are a significant part of a successful HAR site.

Two types of waves propagate radio energy: surface and space. Surface waves travel along the earth's surface, and are heavily influenced by the ground system, specifically the earth's conductivity and proper grounding. Space waves travel through the atmosphere and are primarily a function of the antenna's efficiency and height. The most significant part of a HAR ground system is soil condition, with the following guidelines offered to aid in the evaluation of soil condition for a specific site:

- Conductive soil contributes to better performance of a monopole antenna;
- Cable antennas are recommended for sites with low soil conductivity;
- Fill dirt does not make a good antenna ground plane; and
- Undisturbed soil is preferred when locating a HAR antenna site.

45.3.1.6 Ground Plane

The ground plane of a HAR station is the copper wire part of the antenna system buried beneath the antenna support. Proper design and installation of the ground plane also influences the range over which the station can be heard. HAR design taking into account the following considerations can maximize its transmitting range:

- Locate the site at least 100 feet from overhead power lines, since AM broadcast is adversely affected by AC noise.
- Locate the site at least two (2) miles from large buildings that block the AM signal.
- Locate the HAR installation on a flat site clear of trees, shrubs, poles, and small buildings for a 100-foot radius from the antenna.

45.3.1.6 Antenna Location

The primary factor contributing to the quality of an antenna location is the effect that re-radiating structures has on coverage. The best antenna site will be located farthest away from a potentially re-radiating source. Re-radiating structures reflect radio energy, which distorts the coverage pattern otherwise expected. Too-close proximity to re-radiating structures results in dead spots, or unexpected areas of non-coverage. Potentially re-radiating structures consist of steel frames, copper wiring, iron, or copper plumbing and would have minimum sizes of:

- Greater than 1/8 the wave length in height (71 meters / 233 feet at 530 kHz; 23 meters / 75.5 feet at 1610 kHz)
- Greater than 1/4 the wave length in length (142 meters / 466 feet at 530 kHz; 47 meters / 154 feet at 1610 kHz)

In addition to influencing the ground plane, tall buildings, water towers, radio towers, and smokestacks are examples of vertical structures that can cause interference. Horizontally, power lines, bridge superstructures, guardrails, and metallic fences can vary field strengths, limiting the effectiveness of HAR. If site selection alternatives are inadequate and such sources of interference are unavoidable, field strength tests should be performed at the site under a temporary HAR operating license to assess the quality of HAR transmissions before committing resources to design and permanent installation.

HAR antennas may require approval from the Federal Communications Commission (FCC) and the Federal Aviation Association (FAA). The maximum height permitted by the FCC without special permitting for HAR antennas is 15 meters (49 feet) from the tip of the antenna to the ground, whether mounted on its own structure, or on an existing building or structure. FAA clearance may be required if the antenna site is within a five (5) mile radius of an airport or other aircraft landing area. However, notification may be needed if a vertical antenna greater than 6.1 meters in height is

a) Erected on an airport or heliport

b) Erected within a distance of 100 times antenna height of the nearest point of the nearest runway of an airport with at least one runway more than 975 meters long.

c) Erected within a distance of 50 times antenna height of the nearest point of airports with all runways less than 975 meters long.

d) Erected within a distance 25 times the antenna height of a heliport landing/takeoff area.

If any of these conditions exist, the applicant must submit an FAA form 7460-1 to the applicable regional FAA office. This should be submitted simultaneously with the FCC application. A second form, FAA form 7460-2, is required when construction begins. These forms may be obtained from the Federal Aviation Administration, Washington D.C., 20591, or any of its regional offices.

45.3.1.7 HAR Design and Installation Requirements

Proper installation procedures are critical to the optimum operation of Highway Advisory Radio. Installation procedures are typically encompassed in the specifications and other contract documents. Consequently, this section discusses the installation recommendations and techniques concerning the following aspects of HAR installation:

- Transmitter Housing and Protection
- Antenna System
- Grounding Systems
- HAR Advance Signing
- Underground Infrastructure
- Adjacent Frequency Consideration
- Synchronization Systems

Inappropriate installation of these devices can affect the HAR transmission quality and range, and can also decrease the life of the equipment.

45.3.1.8 Transmitter Housing and Protection

Using a standard Model 332 or 334 cabinet for HAR transmitter enclosure best addresses environmental concerns. Preferably, a transmitter is located as close as possible to its antenna. With the Model 332 or 334 cabinet, the transmitter is secured directly to the antenna structure, providing the site with a more electrically reliable system. If situations dictate otherwise, any NEMA Type 3 enclosure may be used to provide a weatherproof enclosure of the transmitter.

The FCC mandates that no unauthorized person may have access to a radio transmitter. Vandalism is also a HAR security concern. The cabinet locks on 332/334 cabinets are likely adequate to satisfy both security concerns, but the cabinet handles also accommodate the addition of a padlock to provide additional security, if deemed necessary.

45.3.1.9 Antenna System

As discussed above, it is possible that a HAR site might use either a monopole or a cable antenna. Both antenna systems have installation requirements that are detailed below. In Wisconsin, HAR has been deployed exclusively using the monopole antenna installation.

For monopole antenna HAR (10 Watt Application):

- Antennas shall not exceed 15.0 meters (49.2 feet) in height from ground level.
- Only vertical polarization of the antennas is permitted.
- Transmitter RF output shall not exceed 10 watts.
- At a distance of 1.5 km (0.93 miles), emission field strength shall not exceed 2 mV/m.
- The antenna should be mounted to the side of the field enclosure.
- If the support structure is metallic, the antenna shall be electrically insulated from the structure.
- The antenna shall be able to withstand winds of up to 80 mph, and shall be all-weather resistant, including icing.
- The antenna shall have a grounding system as described below.

For cable antenna HAR:

- Cable antennas shall not be longer than 3.0 km (1.9 miles)
- The transmitter RF output shall not exceed 50 watts

- At a distance of 60 meters (197 feet), emission field strength shall not exceed 2 mV/m.

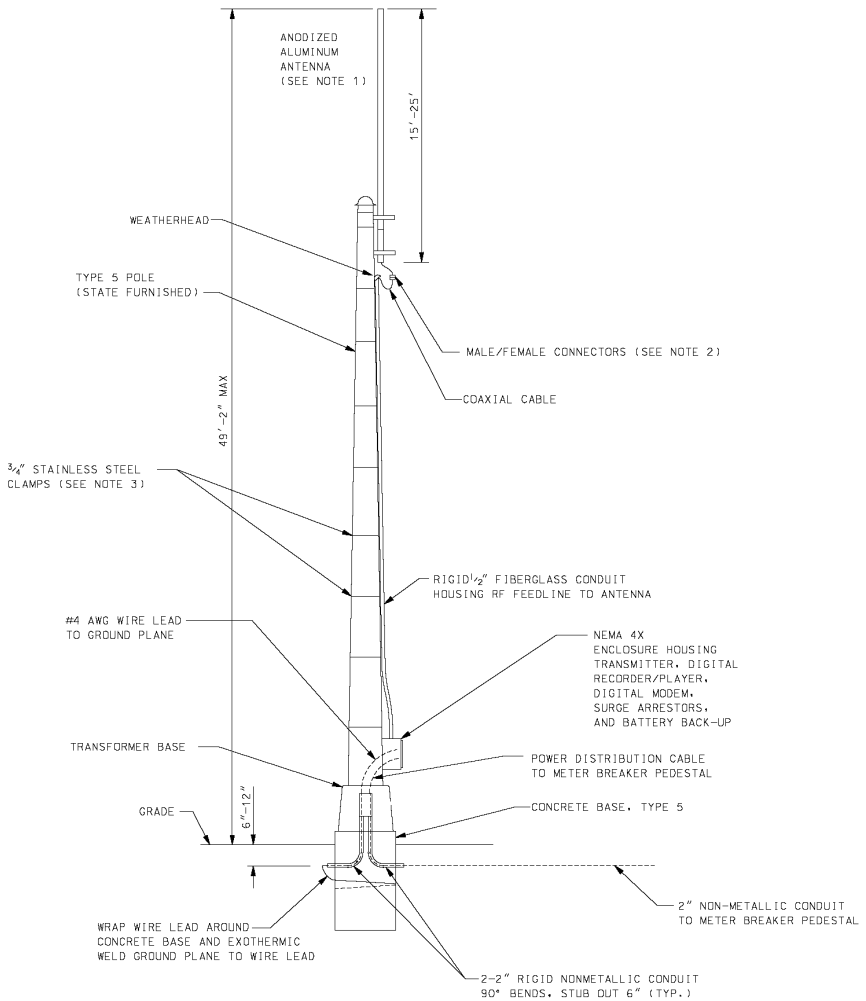

Figure 45.3-1: Typical Highway Advisory Radio Monopole Installation

45.3.1.10 Grounding Plane System

Testing should be performed to ensure that there is proper soil conductivity to afford the proper grounding plane for the antenna. A typical ground plane system may consist of twenty radials of No. 10 or 12 AWG copper wire, each approximately 30 meters (98 feet) in length. A 3/4 - inch by 4-foot copper grounding electrode should be connected to each end of the radial and driven into the ground. The entire ground plane system is typically buried 6 to 12 inches below ground level, which serves to minimizing damage and vandalism. Regardless of exact number, length, and size, ground plane radials are mostly installed in a symmetrical pattern. The radials are then connected at the antenna base where leads are grounded inside the enclosure. Because of the indeterminate nature of soil conditions, additional lengths or radials can be installed to improve signal transmission. An example of a ground plane installation is shown in Figure 45.3-2.

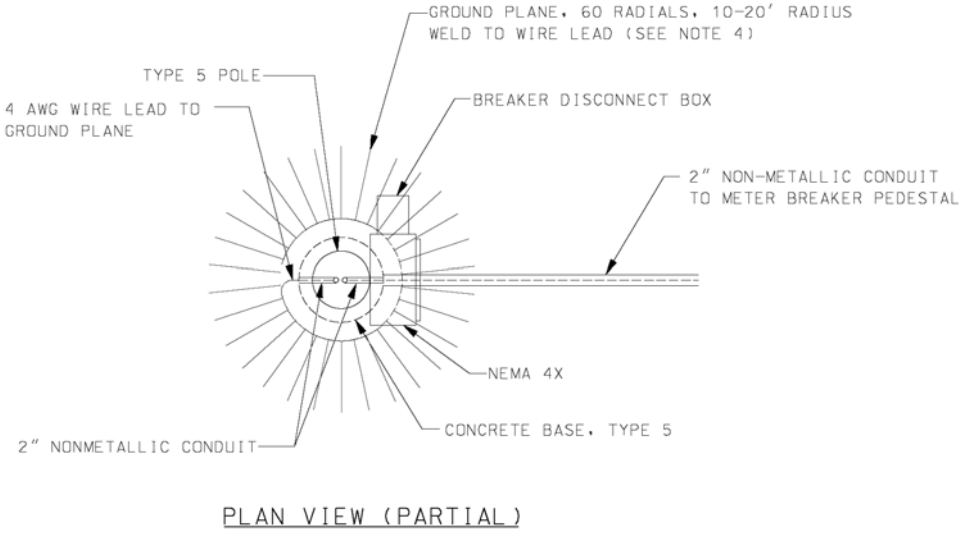

Figure 45.3-2: Typical Ground Plane Installation

45.3.1.11 HAR Advance Signing

Signs indicating both the presence of and the frequency at which the HAR is being broadcast should be installed at the beginning of each HAR broadcast area to alert motorists of its presence. Flashing beacons should be installed at each sign, actuated to flash when a special traffic message (other than default) is being broadcast. While other types of technology can be used in placed of beacons, such as blank out or other dynamic message signs, flashing beacons are reasonable for motorist expectation, and cost-efficient and easy to maintain. In designing advance signing for highway advisory radio, a signing inventory must be performed along the corridor. A minimum of 800-ft spacing must be maintained between the HAR advance sign and other standard Type I signs within the corridor. Placement of these signs must be approved by and coordinated with the Regional Signing Engineer and Regional Traffic Operations Engineer.

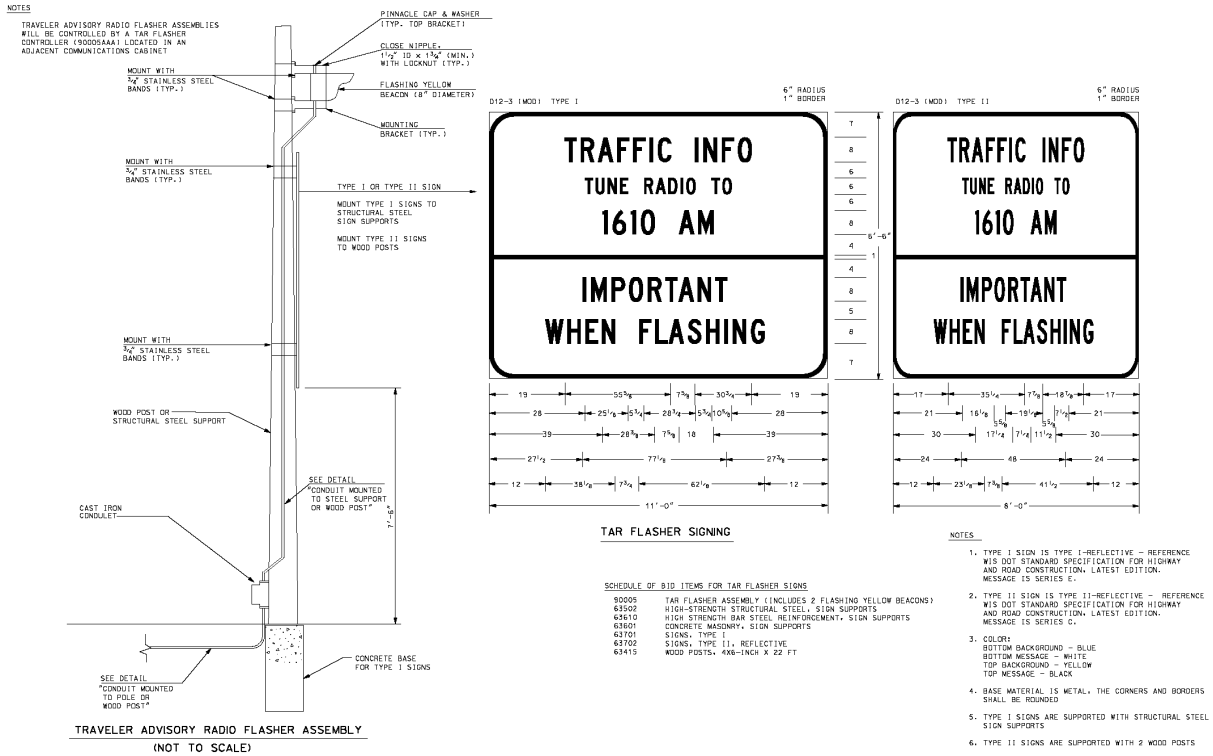

Figure 45.3-3: Typical HAR Advanced Signing

These advance notification signs should be placed at the outer edges of the transmission zone, and should

conform to the appropriate freeway guide sign guidelines as described in the MUTCD. While there are not specific guidelines to the placement of these signs, it is recommended that signs be placed at the fringe of but within the broadcast zone. Such a location would allow for reasonable perception/response/reaction time for the motorist to tune to the frequency and listen to the entire message.

If necessary, another notification sign could be placed in the middle of the broadcast zone. To broaden the coverage area, HAR signing could be installed on city streets in advance of the freeway. This might involve modifying the sign design to better-fit local street right of way restrictions, if the sign is roadside mounted. Such a sign installation requires close coordination with local agencies.

Flashing beacons should be activated for all non-recurring congestion that may affect traffic along the corridor of travel. Activation of these beacons can be accomplished by radio, mainline communications cable, or leased telephone. Consequently, sighting these advance signs must take into account the availability of AC power and appropriate communications.

45.3.1.12 Underground Infrastructure

When the transmitter cabinet, pole, ground plane, and advanced signing assemblies have been placed, the underground conduit infrastructure can be designed. Issues to keep in mind when designing the HAR conduit infrastructure include:

- Conduit Size - 4-Inch conduit is typically used for raceways. Conduit entering electrical service pedestals must be sized per pedestal requirements.
- Conduit Fill - The size and number of conduits along a run is dependent on percentage of fill as established by the National Electric Code (NEC).
- Pull Box Spacing - Pull boxes should be spaced no greater than 200 feet. If a conduit run contains only one or two lightweight cables, this distance can be stretched to approximately 300 feet.
- Terrain - Conduit infrastructure should be designed on relatively flat (4:1 slope or flatter) terrain. For steeper sloped terrain (3:1 or greater), conduit may be run perpendicular to (i.e., up or down) the slope to locations where the terrain is more suitable for conduit installation.

45.3.1.13 Adjacent Frequency Considerations

When establishing a 10-watt HAR, WisDOT must follow several limitations concerning interference with adjacent radio frequency issues. Interference is primarily signal disturbance caused by other transmitters on an adjacent radio frequency. One signal, being broadcast on too close a frequency to another signal, will take on the characteristics of the second signal.

- HAR broadcasts cannot interfere with adjacent AM broadcast stations.
- New HAR sites cannot interfere with existing HAR sites.

AM HAR stations can broadcast at any frequency within the 530-1710 kHz band. To decrease the likelihood of interference, a number of restrictions are included in the FCC rules. The most significant restriction is that the HAR signal source must be located at least 15 km outside the measured 0.5 mV/m daytime contour of any AM broadcast station operating on a first adjacent channel. (540 kHz for a 530 kHz station, 1600 or 1620 kHz for a 1610 kHz station.) These contours are field measured and typically are completed by HAR vendors.

A second restriction is that the HAR must be located far enough away from any AM station operating either on the second or third adjacent to avoid interference in AM receivers tuned to the AM broadcast station frequency. Some guidance can be obtained from the FCC for separation requirements as given in section 73.37 (a) of the FCC rules. The following criteria are set forth as the basis for separation between a new and an existing AM station:

For stations separated by 20 kHz:

- The 2-mV/m contours of a new station may not overlap the 25-mV/m contours of an existing station.
- The 25-mV/m contour of a new station may not overlap the 2-mV/m contours of an existing station.

For stations separated by 30 kHz:

- The 25-mV/m contour of a new station may not overlap the 25-mV/m contours of an existing station.

Due to the low power of HAR stations, the 25 mV/m contour will be relatively small and close to the antenna site. The above criteria will generally be met if the antenna site is located outside the 2-mV/m contour of a conflicting second adjacent channel and outside the 25-mV/m contour of a conflicting third adjacent channel. If there are no second or third adjacent channels within approximately 160 km (257 miles), no further proof of non-interference is required.

45.3.1.14 Synchronization Systems

If there is two or more HAR within a close proximity, a synchronization system should be utilized to minimize the interference between the broadcast stations. Even though the criteria for broadcast range is between 3-5 miles, this can vary greatly with terrain and interference.

45.3.2 Licensing and Permits

Obtaining appropriate licensing for HAR operations occurs under the jurisdiction of the Federal Communications Commission (FCC). Various issues must be considered in the licensing procedure:

- FCC licensing options
- License Application Procedure
- Other Permits and Requirements
- License Upkeep and Renewal Procedures

45.3.2.1 FCC Licensing Options

Three different types of licenses can be issued by the FCC for HAR operations:

- Permanent licenses (10-watt HAR and Enhanced HAR)
- Temporary licenses
- Experimental licenses

Permanent licenses are the most common HAR license type, presuming adequate satisfaction of all FCC rules and regulations. If the HAR supplier files the application, then the agency usually needs to complete a questionnaire provided by the supplier. The supplier will then fill out the FCC application based on the questionnaire. Obtaining the license through a supplier is the most common procedure in today's market, given their expertise and familiarity with the application process.

If the agency plans on completing the application, it is necessary to gather all of the information to meet the requirements covered under section 90.242 of the FCC rules. In addition, an FCC form 574, Application for Private Land Mobile and General Mobil Radio Services, needs to be completed.

A permanent HAR (or TIS, as called by the FCC) license is issued for 5 years. A station must be placed in operation within eight months from the date of the license grant. If that does not occur, the license becomes invalid and must be returned to the FCC for cancellation.

Further, within 60 days after station authorization or station construction, whichever occurs latest, the licensee must submit to the FCC a map showing a 2 mV/m contour based on actual "on-the-air" measurements. A sufficient number of points must be selected to determine the distance at which the attenuated field of 2 mV/m exists, as measured with a calibrated standard field strength meter. This may be done in 5 to 8 radial directions to create a plot of the 2-mV/m coverage contours on the map. If the measured field exceeds 2 mV/m at a distance of 1.5 km, the transmitter output power must be decreased accordingly. For stations employing cable antennas, the measured field strength of 2 mV/m must not be exceeded at a distance of 60 meters from any portion of the antenna.

For a station to remain in operation, the station must be operated on a reasonably continuous basis. Any station that has not been operated for one year or more is considered to have been permanently discontinued. This requires that the license be returned to the FCC for cancellation. A licensee planning to continue operations beyond the expiration date may request a license renewal. Renewals are regularly granted, provided the licensee has no outstanding citations for rule violations. A renewal application must be submitted up to 30 days after the license expires, and operation may continue on an interim basis during this period. It is recommended that the renewal be submitted 30 days prior to the expiration date of the license. If the renewal form is not postmarked within 30 days after the expiration date, the license is invalid and further operation is illegal. Any further authorization would require an original station application.

Temporary licenses, or Special Temporary Authority (STA) are granted for up to 1 year, and are not typically renewable. STA's are usually granted under short terms of unusual circumstance. A STA can be obtained for HAR operation while the permanent license is being processed, or to provide for testing of a site to assess its operational characteristics. An STA can be requested in the form of a letter providing essential information as listed in section 90.145 of the FCC rules.

Experimental licenses are not granted for standard HAR operations. Typically, experimental licenses are granted for:

- Conducting scientific and technical radio research,

- Equipment demonstration by manufacturers, and
- Testing of equipment.

Eligibility for this type of license is based on the qualifications of the applicant to conduct the proposed experiments or test. Experimental licenses are issued for a 2-year period, and renewals can be granted if necessary. While it is not likely that WisDOT would use experimental licenses, such licenses may be used if WisDOT chooses to evaluate new HAR technologies on-site. Given that circumstance, the owner or demonstrator of the new HAR technology would likely be responsible for licensing.