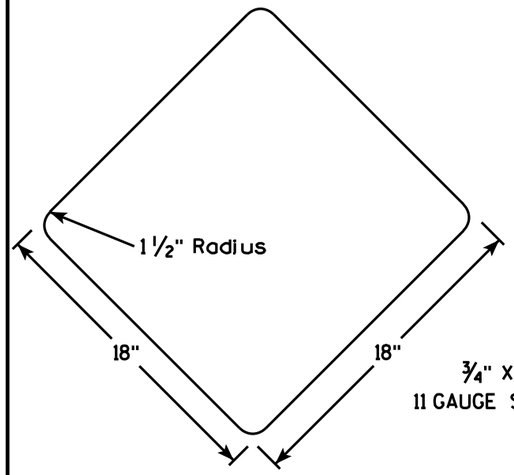


SIGN DETAIL

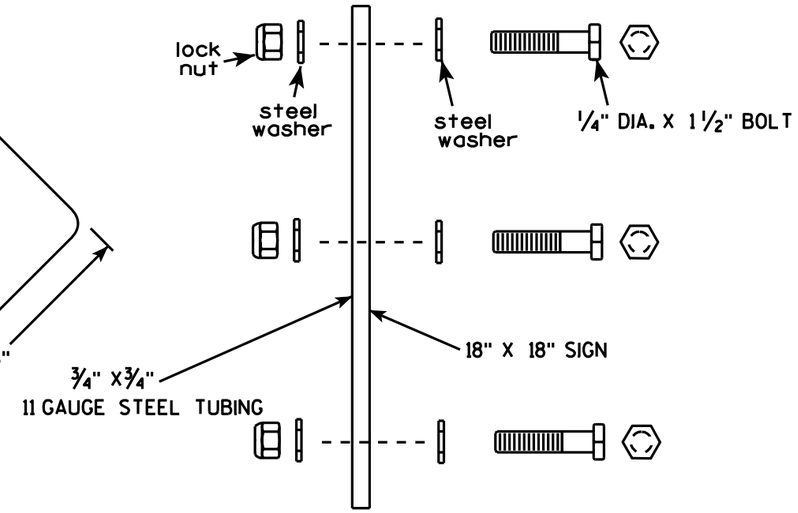


FLAG BOLTING PROCEDURE

## GENERAL NOTES

1. ALL MATERIAL TO BE APPROVED BY ENGINEER BEFORE INSTALLATION.
2. SEE SIGN PLATE A4-8 FOR HARDWARE REQUIREMENTS.
3. SIGN IS TYPE II, TYPE F REFLECTIVE- REFERENCE WisDOT STANDARD. SPECIFICATION FOR HIGHWAY AND STRUCTURE CONSTRUCTION LATEST EDITION.
4. SIGN COLOR - ORANGE
5. SIGN CORNERS SHALL BE ROUNDED
6. BRACKET SHALL BE ENTIRELY PRIMED AND PAINTED WITH TWO COATS OF A BLACK POWDER COATED ENAMEL PAINT.

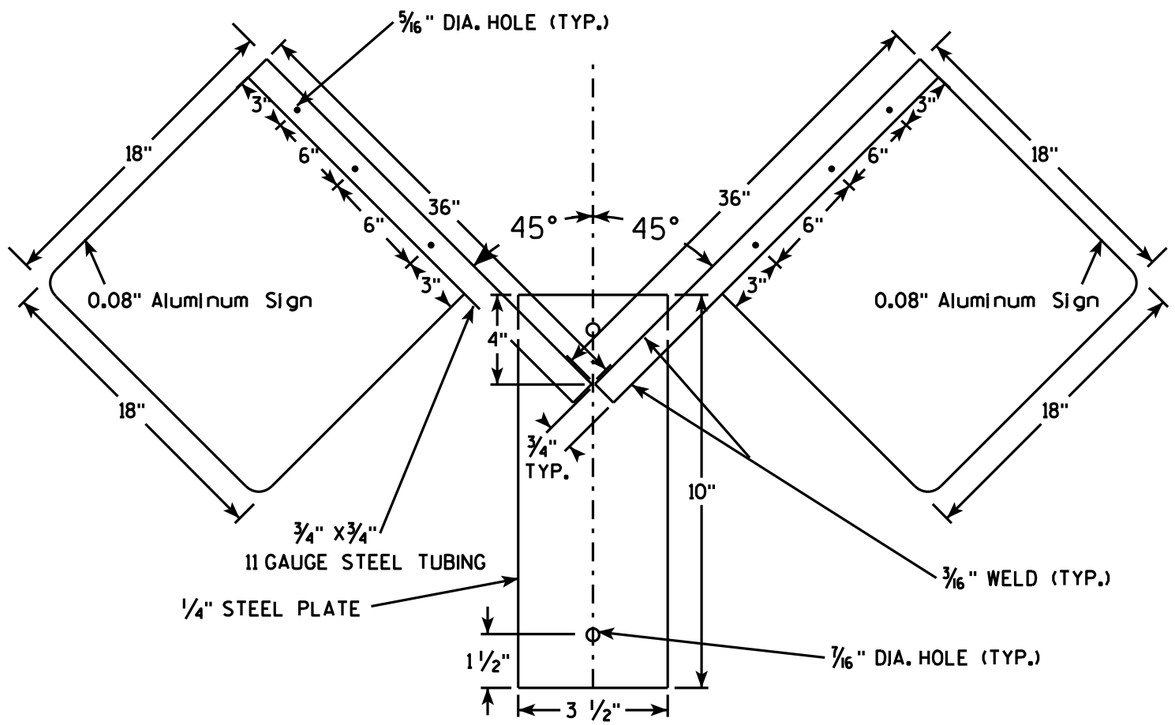


BACK VIEW

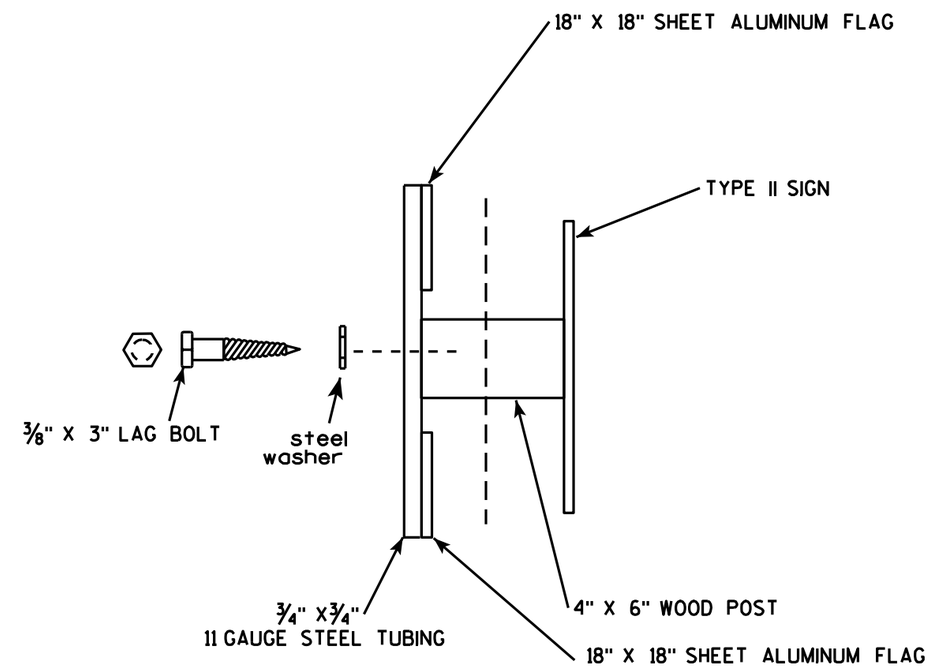


TOP VIEW

TYPICAL INSTALLATION OF PERMANENT TYPE II SIGN FLAGS

WISCONSIN DEPT OF TRANSPORTATION

APPROVED Matthew R Rauch
for State Traffic Engineer

DATE 5/15/13 PLATE NO. A4-15.3

| PROJECT NO: | HWY: | COUNTY: | | SHEET NO: | E |
|---|---|---|---|---|---|