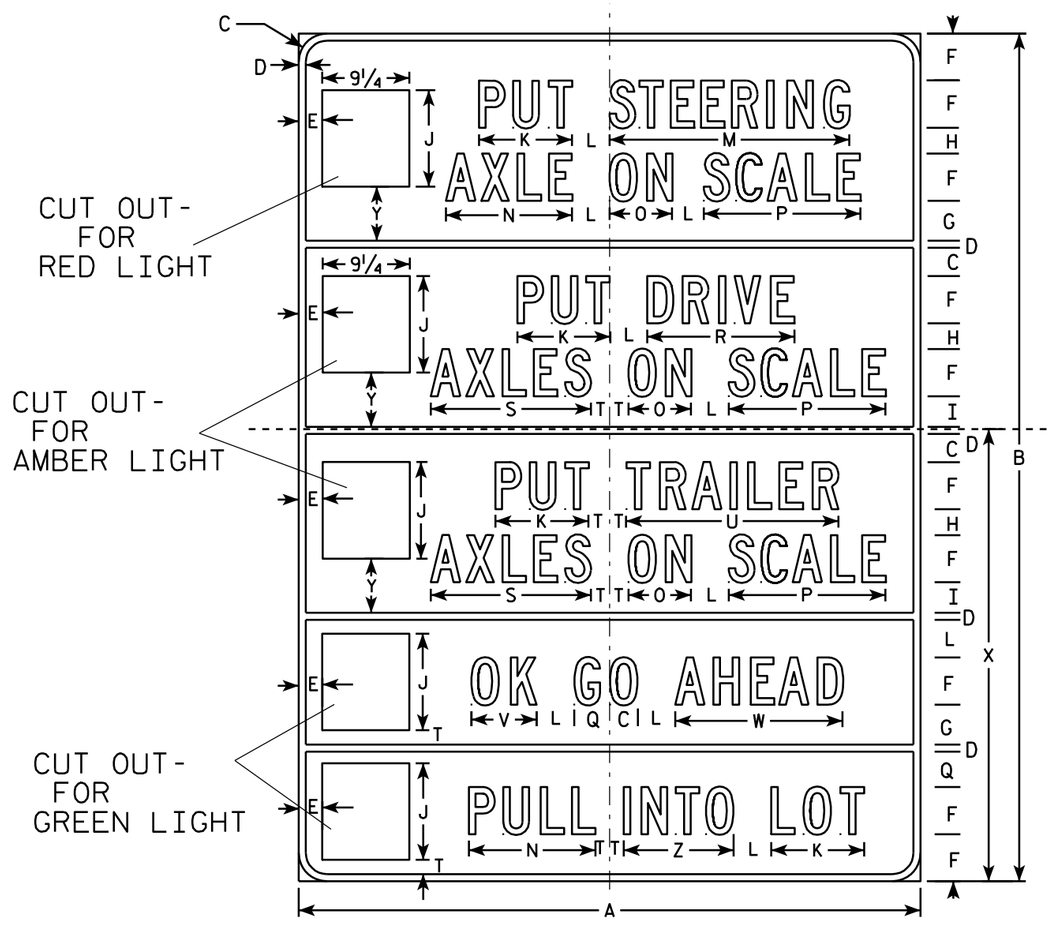

R13-50

NOTES

1. Sign is Type II - Type H Reflective - reference WIS DOT Standard Specification for HIGHWAY and STRUCTURE CONSTRUCTION latest edition.
2. Color:
   Background - White
   Message - Black
3. Message Series - C
4. Corners may be square or rounded but borders shall be rounded as shown.
5. Base material for this sign shall be plywood and shall be split into two seperate pieces for the 66 x 90 size as shown on the detail by the dashed line (----------).

SIZE	A	B	C	D	E	F	G	H	I	J	K	L	M	N	O	P	Q	R	S	T	U	V	W	X	Y	Z	Area sq. ft.
1																											
2S	66	90	3	3/4	2 1/2	5	4 1/4	2 3/4	3 1/4	10 1/4	9 7/8	4	25 1/2	13 3/8	6 5/8	16 5/8	3 3/4	15 5/8	17	1 1/2	22 1/2	6 7/8	17 3/4	48	5 3/4	11 5/8	41.25
2M	66	90	3	3/4	2 1/2	5	4 1/4	2 3/4	3 1/4	10 1/4	9 7/8	4	25 1/2	13 3/8	6 5/8	16 5/8	3 3/4	15 5/8	17	1 1/2	22 1/2	6 7/8	17 3/4	48	5 3/4	11 5/8	41.25
3																											
4																											
5																											

STANDARD SIGN
R13-50

WISCONSIN DEPT OF TRANSPORTATION

APPROVED Matthew R Rauch
for State Traffic Engineer

DATE 4/1/11 PLATE NO. R13-50.4

PROJECT NO:	HWY:	COUNTY:		SHEET NO:	E