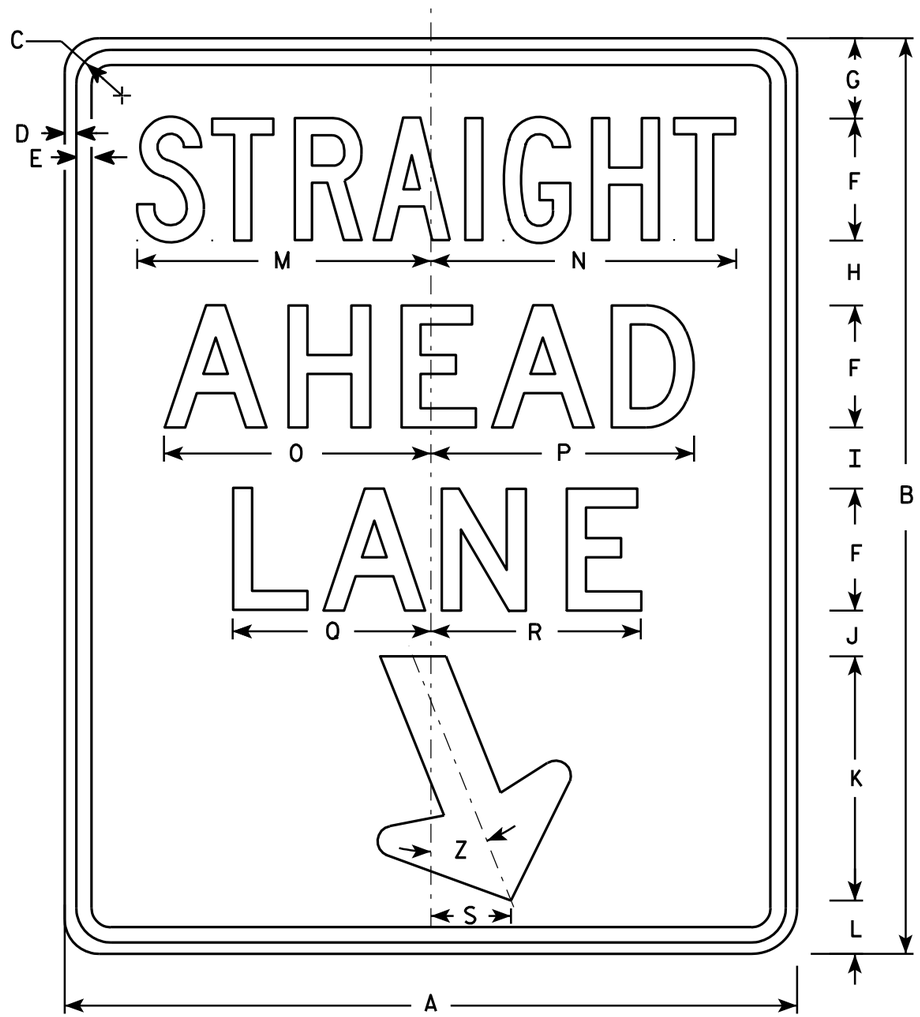

R3-55A

NOTES

1. Sign is Type II - Type H Reflective - reference WIS DOT Standard Specification for HIGHWAY and STRUCTURE CONSTRUCTION latest edition.
2. Color:
   Background - White
   Message - Black
3. Message Series - See Note 3
4. Corners may be square or rounded when base material is plywood but borders shall be rounded as shown. When base material is metal, the corners and borders shall be rounded.
5. Line 1 is Series - C
   Lines 2 and 3 Series - D

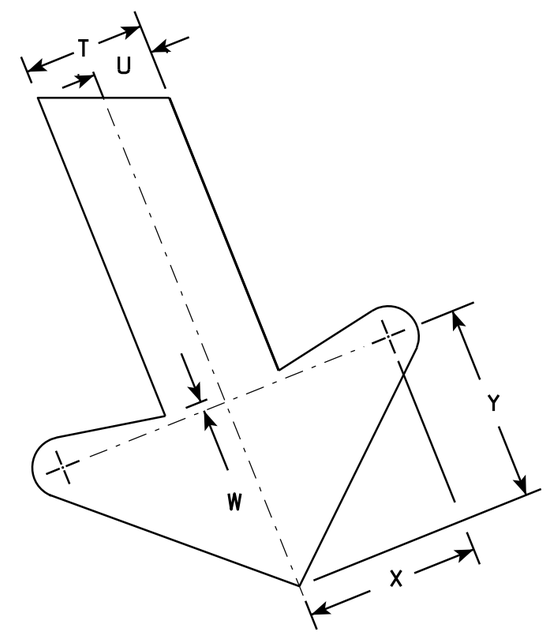

ARROW DETAIL

SIZE	A	B	C	D	E	F	G	H	I	J	K	L	M	N	O	P	Q	R	S	T	U	V	W	X	Y	Z	Area sq. ft.
1																											
2S	24	30	1 1/8	3/8	1/2	4	2 5/8	2 1/8	2	2	1 1/2	8	9 5/8	10	8 3/4	8 5/8	6 1/2	6 7/8	2 5/8	2	1	1/2	1/4	2 7/8	3 1/4	22°	5.0
2M	24	30	1 1/8	3/8	1/2	4	2 5/8	2 1/8	2	2	1 1/2	8	9 5/8	10	8 3/4	8 5/8	6 1/2	6 7/8	2 5/8	2	1	1/2	1/4	2 7/8	3 1/4	22°	5.0
3	36	48	1 3/4	1/2	5/8	6	4 1/2	3 3/4	3 5/8	3 5/8	2 7/8	12	14 1/2	14 7/8	13 1/8	12 7/8	9 3/4	10 1/4	4	3	1 1/2	3/4	3/8	4 1/4	4 7/8	22°	12.0
4																											
5																											

STANDARD SIGN
R3-55A

WISCONSIN DEPT OF TRANSPORTATION

APPROVED Matthew R Rauch
for State Traffic Engineer

DATE 3/24/2011 PLATE NO. R3-55A.5

PROJECT NO:	HWY:	COUNTY:		SHEET NO:	E