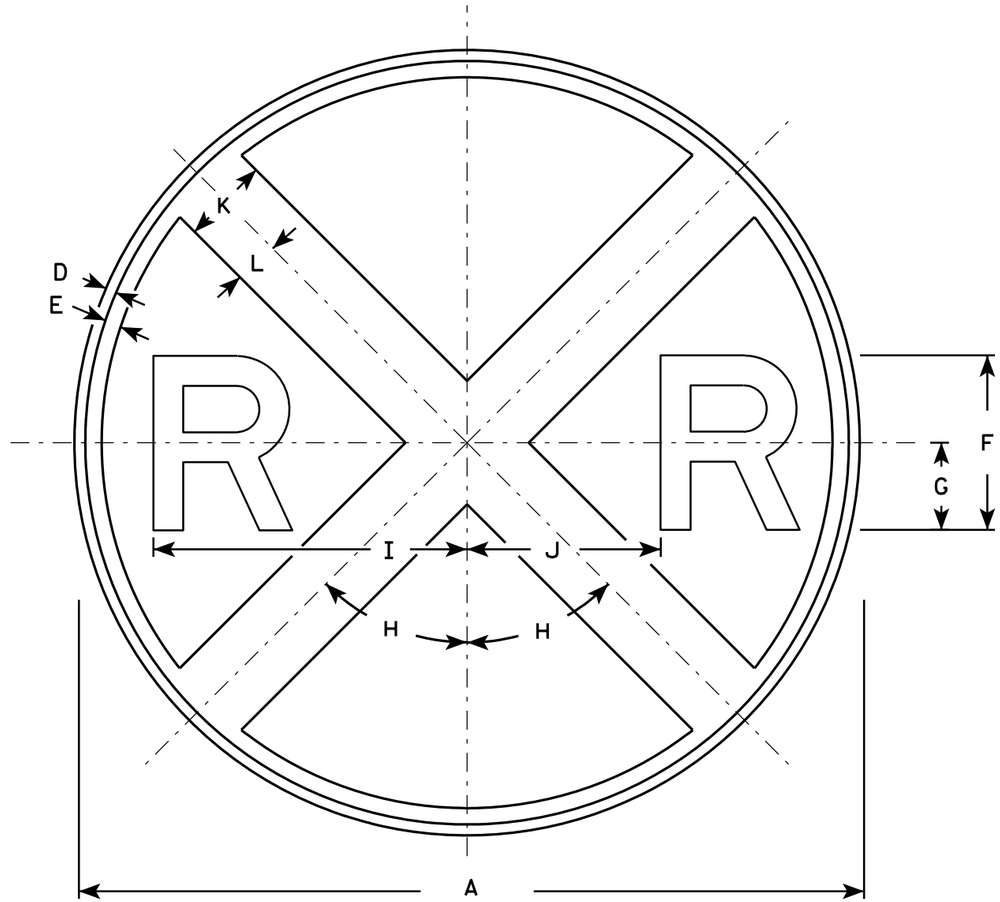

W10-1

NOTES

1. Sign is Type II - Type F Reflective - reference WIS DOT Standard Specification for HIGHWAY and STRUCTURE CONSTRUCTION latest edition.
2. Color:
   Background - Yellow
   Message - Black
3. Message Series - E

SIZE	A	B	C	D	E	F	G	H	I	J	K	L	M	N	O	P	Q	R	S	T	U	V	W	X	Y	Z	Area sq. ft.
1	30			3/8	5/8	7	3 1/2	45°	12 3/8	7 1/8	3	1 1/2															4.91
2S	36			5/8	3/4	8	4	45°	14 3/8	8 5/8	4	2															7.07
2M	36			5/8	3/4	8	4	45°	14 3/8	8 5/8	4	2															7.07
3																											
4	48			3/4	1 1/4	10	5	45°	18 3/8	11 5/8	5	2 1/2															12.57
5																											

STANDARD SIGN
W10-1

WISCONSIN DEPT OF TRANSPORTATION

APPROVED Matthew R Rauch for State Traffic Engineer
DATE 3/13/13 PLATE NO. W10-1.8

PROJECT NO: | HWY: | COUNTY: | SHEET NO: E