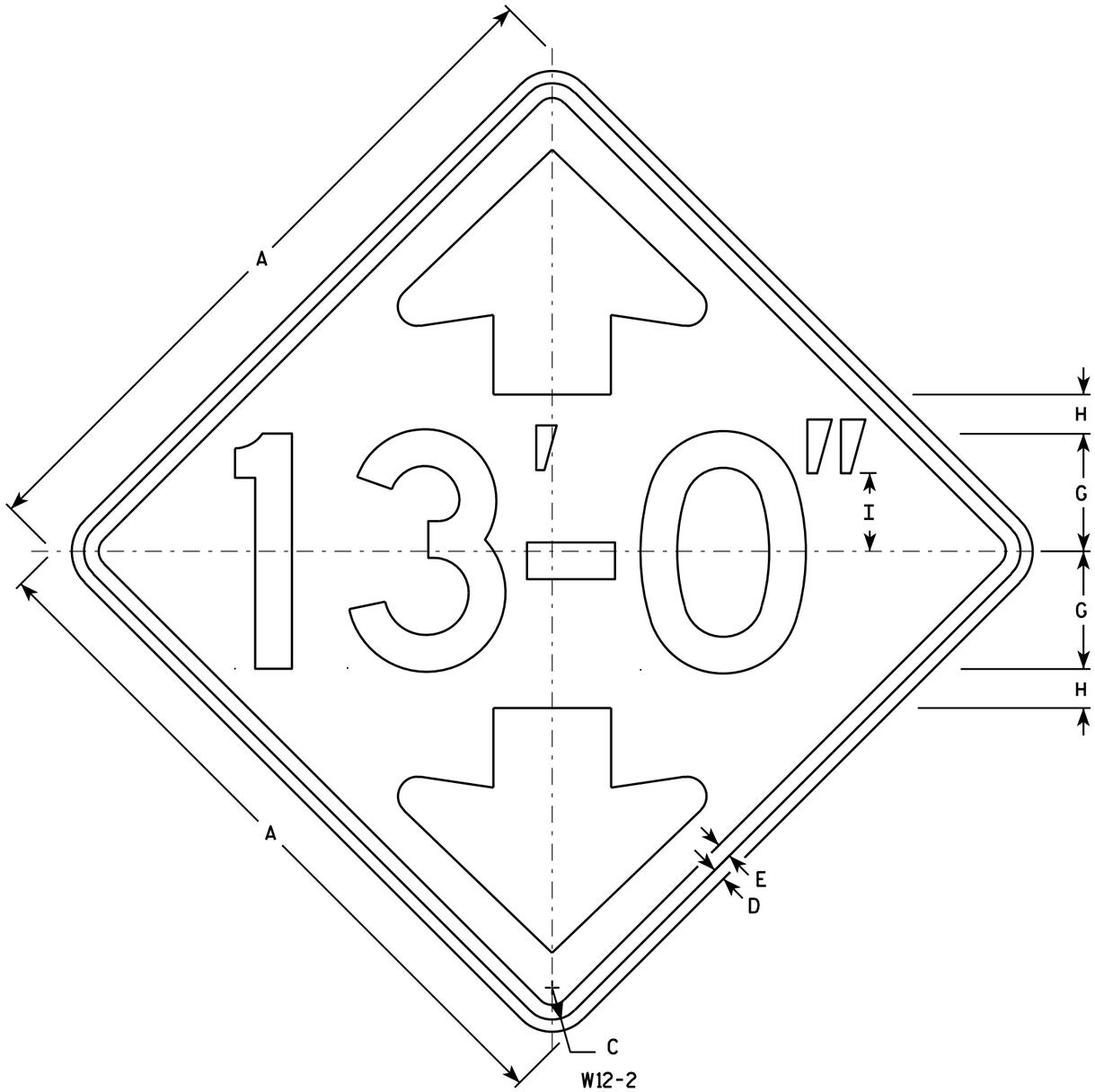

NOTES

1. Sign is Type II - Type F Reflective - reference WIS DOT Standard Specification for HIGHWAY and STRUCTURE CONSTRUCTION latest edition.
2. Color:
   Background - Yellow
   Message - Black
3. Message Series - D
4. Corners may be square or rounded when base material is plywood but borders shall be rounded as shown. When base material is metal, the corners and borders shall be rounded.
5. Substitute appropriate numerals and optically adjust spacing of numerals, hyphen, foot & inch marks to achieve proper balance.

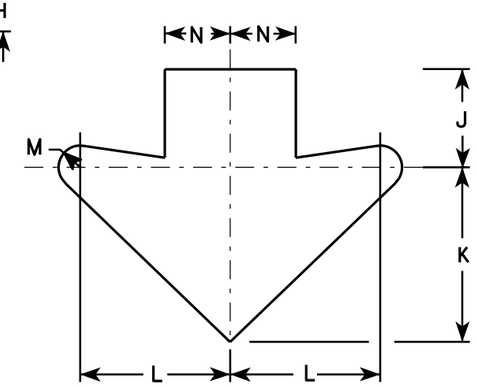

Arrow Detail

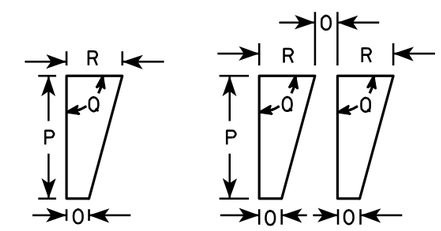

Foot Mark & Inch Mark Detail

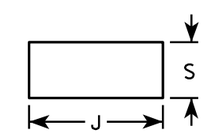

Hyphen Detail

SIZE	A	B	C	D	E	F	G	H	I	J	K	L	M	N	O	P	Q	R	S	T	U	V	W	X	Y	Z	Area sq. ft.
1	30		1 3/8	1/2	5/8		5	1 5/8	3 3/8	3 3/4	6 5/8	5 3/4	3/4	2 1/2	1/2	2 1/4	90°	1	1 5/8								6.25
2S	36		1 5/8	5/8	3/4		6	2	4	4 1/2	8	6 7/8	1	3	1/2	2 3/4	90°	1 1/4	1 7/8								9.00
2M	36		1 5/8	5/8	3/4		6	2	4	4 1/2	8	6 7/8	1	3	1/2	2 3/4	90°	1 1/4	1 7/8								9.00
3	36		1 5/8	5/8	3/4		6	2	4	4 1/2	8	6 7/8	1	3	1/2	2 3/4	90°	1 1/4	1 7/8								9.00
4	36		1 5/8	5/8	3/4		6	2	4	4 1/2	8	6 7/8	1	3	1/2	2 3/4	90°	1 1/4	1 7/8								9.00
5	48		2 1/4	3/4	1		8	2 5/8	5 1/2	5 7/8	10 5/8	9 1/4	1 3/8	4	5/8	3 5/8	90°	1 5/8	2 1/2								16.00

STANDARD SIGN
W12-2

WISCONSIN DEPT OF TRANSPORTATION

APPROVED Matthew R Rauch
for State Traffic Engineer

DATE 3/13/13 PLATE NO. W12-2.9

PROJECT NO:	HWY:	COUNTY:		SHEET NO:	E