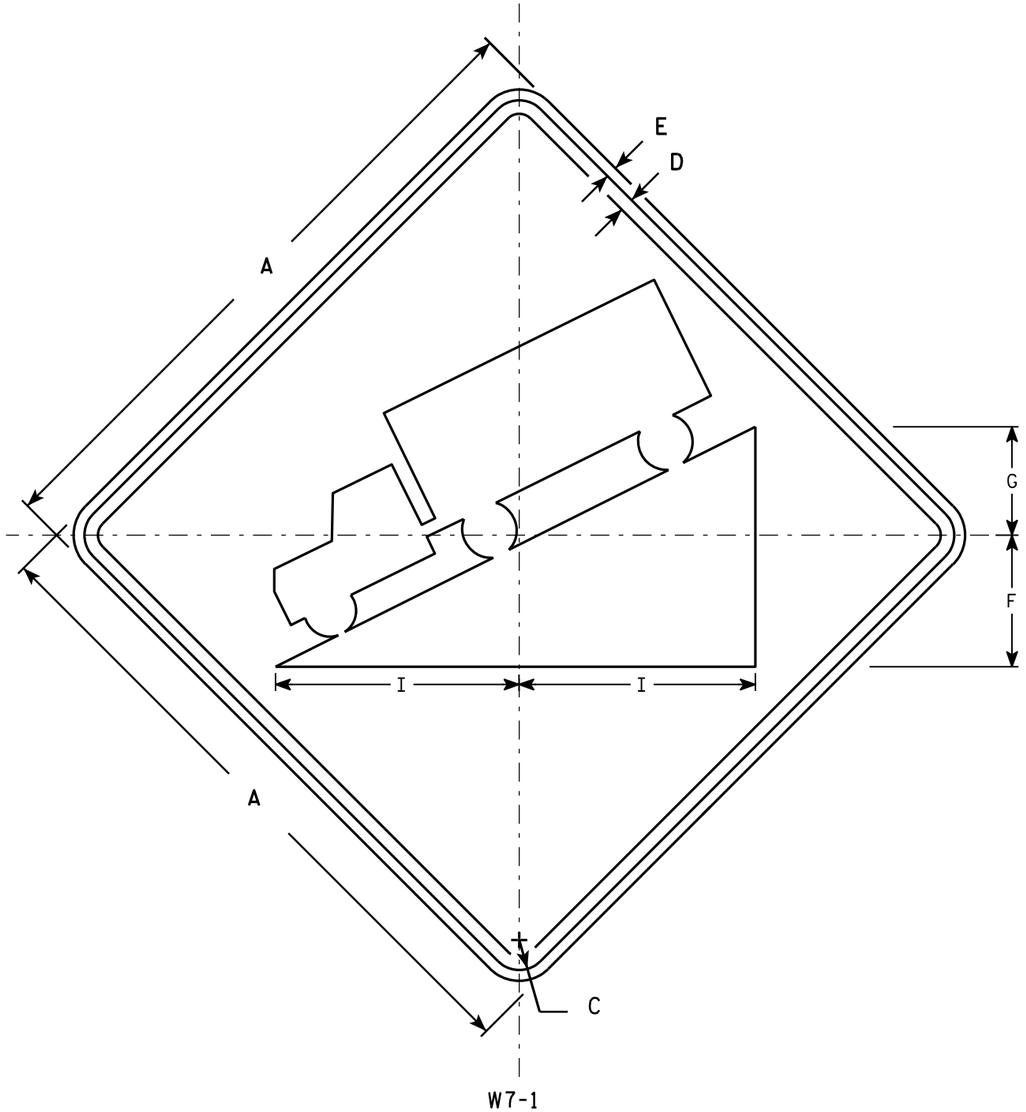

NOTES

1. Sign is Type II - Type F Reflective - reference WIS DOT Standard Specification for HIGHWAY and STRUCTURE CONSTRUCTION latest edition.
2. Color:
   Background - Yellow
   Message - Black
3. Message Series - D
4. Corners may be square or rounded when base material is plywood but borders shall be rounded as shown. When base material is metal, the corners and borders shall be rounded.

SIZE	A	B	C	D	E	F	G	H	I	J	K	L	M	N	O	P	Q	R	S	T	U	V	W	X	Y	Z	Area sq. ft.
1	24		1 1/8	3/8	3/8	5	4		8 3/4																		4.0
2S	30		1 3/8	1/2	5/8	6	5		11																		6.25
2M	36		1 5/8	5/8	3/4	7 1/4	6		13 1/4																		9.0
3	36		1 5/8	5/8	3/4	7 1/4	6		13 1/4																		9.0
4	36		1 5/8	5/8	3/4	7 1/4	6		13 1/4																		9.0
5	48		2 1/4	3/4	1	9 3/4	8		17 1/2																		16.0

STANDARD SIGN
W7-1

WISCONSIN DEPT OF TRANSPORTATION

APPROVED Matthew R Rauch
for State Traffic Engineer

DATE 03/12/13 PLATE NO. W7-1.13

PROJECT NO:	HWY:	COUNTY:		SHEET NO:	E