Wisconsin Department of Transportation

Division of Transportation Systems Development
Bureau of Project Development
4802 Sheboygan Avenue, Rm 601
P O Box 7916
Madison, WI 53707-7916

Telephone: (608) 266-1631
Facsimile (FAX): (608) 266-8459

August 28, 2015

NOTICE TO ALL CONTRACTORS:

Proposal #01: **1060-33-81, WISC 2015 473**
Zoo IC – Zoo Interchange Phase 2
Lincoln – Bluemound, 121st to 70th
USH 45
Milwaukee County

1060-34-82
Zoo IC – IH 894 NB Auxiliary Lane
Oklahoma Ave to National Ave
IH 894
Milwaukee County

1060-43-81, WISC 2015 474
East West Freeway
Underwood Cr Prkwy & 121st St Brdg
IH 94
Milwaukee County

Letting of September 29, 2015

This is Addendum No. 02, which provides for the following:

Special Provisions

Revised Special Provisions	
Article No.	Description
4	Prosecution and Progress
123	Luminaires Utility LED B, Item 659.1120; Luminaires Utility LED D, Item 659.1130
206	Probeam Luminaire, Item SPV.0060.1127

Added Special Provisions	
Article No.	Description
405	Partially Removing Existing Drilled Shafts
406	Crash Cushions Permanent Low Maintenance and Crash Cushions Temporary

Deleted Special Provisions	
Article No.	Description
53	Incentive/Disincentive for Interim Completion of Work Ramp NE, Item 108.3100.S.0003

Schedule of Items

Revised Bid Item Quantities					
Bid Item	Item Description	Unit	Old Quantity	Revised Quantity	Proposal Total
506.3015	Welded Stud Shear Connectors 7/8x6-Inch	EACH	17200	0	57888
506.3020	Welded Stud Shear Connectors 7/8x7-Inch	EACH	0	17200	20650
511.1200.0018	Temporary Shoring B-40-874	SF	1900	3800	3800
550.2168	Piling CIP Concrete 16 X 0.50-Inch	LF	1395	0	15525
SPV.0060.4115	Pile Dynamic Analyzer (PDA) Restrikes	EACH	4	6	97
SPV.0060.4116	Case Pile Wave Analysis Program (CAP/WAP) Evaluation	EACH	2	3	55

Added Bid Item Quantities					
Bid Item	Item Description	Unit	Old Quantity	Revised Quantity	Proposal Total
550.2148	Piling CIP Concrete 14 X 0.50-Inch	LF	0	1395	1395
SPV.0105.0050	Partially Removing Existing Drilled Shafts	LS	0	1	1

Deleted Bid Item Quantities					
Bid Item	Item Description	Unit	Old Quantity	Revised Quantity	Proposal Total
108.3100.S.0003	Incentive/Disincentive for Interim Completion of Work Ramp NE	CD	0.1	0	0

Plan Sheets

Revised Plan Sheets	
Plan Sheet	Plan Sheet Title (brief description of changes to sheet)
206	Ramp SA revised to show some work done in previous contract
398	Removal sheet revised to show Partially Removing Existing Drilled Shaft location
957	Sign 262R revised
1621	Quantity sheet revised to show Partially Removing Existing Drilled Shaft location
1664	Sheet was copied over in Addendum #1 (Sheet 1663 was shown twice)
1924	Sign 262R revised
2353	Sign 262R revised
2862	Restrike revisions
2868	Restrike revisions
3850	Temporary Shoring revisions
3852	Temporary Shoring revisions

The responsibility for notifying potential subcontractors and suppliers of these changes remains with the prime contractor.

Sincerely,

Mike Coleman

Proposal Development Specialist
Proposal Management Section

ADDENDUM NO. 02

1060-33-81

August 28, 2015

Special Provisions

4. Prosecution and Progress

Replace the section titled **Long Term Closure Restrictions** *with the following:*

Long Term Closure Restrictions
The existing US 45 southbound to IH 94 eastbound system ramp, ramp NE, may be closed as shown in the plans in Stage 3A for a onetime only period not to exceed 240 consecutive calendar days to facilitate construction of that ramp. Do not close this ramp prior to July 11, 2016 and open this ramp to traffic by June 27, 2017, or as approved by the engineer. Lane rental assessments will not apply to this 240 calendar day closure.

Do not close long term the existing Ramp WN prior to August 19, 2016, or as approved by the engineer.

Replace the section titled **Interim and Final Completion of Work** *with the following:*

Interim and Final Completion of Work

Supplement standard spec 108.10 with the following:

The department will not grant time extensions for the following:

- Severe weather as specified in standard spec 108.10.2.2.
- Labor disputes that are not industry wide.
- Delays in material deliveries.

Each day is defined as a 24 hour period beginning at 12:01 AM.
SEF Rev. 14_1211

Complete the retaining wall work for Minor Retaining Wall R-2 along the berm south of Greenfield Avenue prior to May 27, 2016.

Complete the landscaping work, including but limited to, tree planting, seeding and mulch, and sodding along the berm south of Greenfield Avenue prior to May 27, 2016.

Complete the landscaping work, including but limited to, tree planting, seeding and mulch, and sodding along Adler Street, Chester Street and O'Connell Street prior to May 27, 2016.

Interim Completion of Work National Avenue Exit Ramp
If the contractor fails to complete all work as shown in Stage 1B of Project ID # 1060-34-82 and coordination measures necessary on the northbound IH 894/USH 45 exit ramp to National Avenue to restore traffic on the ramp within 28 calendar days of the closure date, the department will assess the contractor $10,000 in interim liquidated damages for each calendar day that the ramp remains closed after 12:01 AM, on the 29th calendar day after the closure begins. An entire calendar day will be charged for any period of time within a calendar day that the ramp remains closed beyond 12:01 AM, on the 29th day, the exit ramp is not open.

Interim Completion of Work Oklahoma Avenue Entrance Ramp

If the contractor fails to complete all work as shown in Stage 1B of Project ID # 1060-34-82 and coordination measures necessary on the Oklahoma Avenue entrance ramp to northbound IH 894/USH 45 to restore traffic on the ramp within 28 calendar days of the closure date, the department will assess the contractor $10,000 in interim liquidated damages for each calendar day that the ramp remains closed after 12:01 AM, on the 29th calendar day after the closure begins. An entire calendar day will be charged for any period of time within a calendar day that the ramp remains closed beyond 12:01 AM, on the 29th day, the entrance ramp is not open.

Interim Completion of Work 04/15/2016
If the contractor fails to complete all of the work necessary to open the IH 894 auxiliary lane as shown in project ID 1060-34-82, Stage 2 of the traffic control plans including:

- All work shown in stage 1B
- IH 894 pavement, pavement marking, barrier wall, signage

prior to 12:01 AM on April 16, 2016, the department will assess the contractor $1,810 in interim liquidated damages per day for each calendar day after 12:01 AM on April 16, 2016. An entire calendar day will be charged for any period of time within a calendar day that the road remains closed beyond 12:01 AM on April 16, 2016.

Interim Completion of Work 05/26/2016
If the contractor fails to complete all of the work necessary to complete the sign structures and restoration as shown in project ID 1060-34-82, Stage 2 of the traffic control plans prior to 12:01 AM on May 27, 2016, the department will assess the contractor $1,810 in interim liquidated damages per day for each calendar day after 12:01 AM on May 27, 2016. An entire calendar day will be charged for any period of time within a calendar day that the road remains closed beyond 12:01 AM on May 27, 2016.

Interim Completion of Work Wisconsin Avenue, 93rd Street to 95th Street
If the contractor fails to complete all concrete paving, pavement marking, sidewalk and restoration work on Wisconsin Avenue between 93rd Street and 95th Street, as shown in Stage 4 to restore traffic on Wisconsin Avenue between 93rd Street and 95th Street within 42 calendar days of the closure date, the department will assess the contractor $5,000 in interim liquidated damages for each calendar day that the roadway remains closed after 12:01 AM, on the 43rd calendar day after the closure begins. An entire calendar day will be charged for any period of time within a calendar day that the roadway remains closed beyond 12:01 AM, on the 43rd day, the roadway is not open.

Interim Completion of Work Wisconsin Avenue, 99th Street to 97th Street
If the contractor fails to complete all concrete paving, pavement marking, signing, sidewalk and restoration work on Wisconsin Avenue between 99th Street and 97th Street and on 97th Street, as shown in Stages 2 and 3 of the plans, within 60 calendar days, the department will assess the contractor $1,810 in interim liquidated damages for each calendar day that the roadway is not complete after 12:01 AM, on the 61st calendar day. An entire calendar day will be charged for any period of time within a calendar day that the roadway is not complete beyond 12:01 AM, on the 61st day.

Interim Completion of Work 10/31/2016
If the contractor fails to complete all of the work necessary to open IH 894/USH 45 to 3 traffic lanes in each direction as shown in Stage 4 of the traffic control plans including:

- All work shown in stages 1, 2, and 3;
- IH 894/USH 45 northbound pavement, pavement marking, barrier wall, signage and lighting;
- Bridge B-40-883;
- Retaining walls R-40-532, R-40-534 and R-40-467;
- Noise walls N-40-66 and N-40-79;

- The northbound IH 894/USH 45 exit to Greenfield Avenue including pavement, pavement marking, barrier wall, signage and lighting;
- The Greenfield Avenue entrance ramp to northbound IH 894/USH 45 including pavement, pavement marking, barrier wall, signage and lighting.

prior to 12:01 AM on November 1, 2016, the department will assess the contractor $50,000 in interim liquidated damages per day for each calendar day after 12:01 AM on November 1, 2016. An entire calendar day will be charged for any period of time within a calendar day that the road remains restricted to two lanes beyond 12:01 AM on November 1, 2016.

Interim Completion of Work 11/22/2016
If the contractor fails to complete all of the work necessary to open IH 94 to 3 traffic lanes in each direction as shown in Stage 5 of the traffic control plans including:

- All work shown in stages 1, 2, 3 and 4
- IH 94 eastbound pavement, pavement marking, barrier wall, signage and lighting;
- Bridges B-40-870, B-40-872 and B-40-874
- Retaining walls R-40-540
- The eastbound IH 94 exit to STH 100 including pavement, pavement marking, barrier wall, signage and lighting;
- The STH 100 entrance ramp to eastbound IH 94 including pavement, pavement marking, barrier wall, signage and lighting;

prior to 12:01 AM on November 23, 2016, the department will assess the contractor $50,000 in interim liquidated damages per day for each calendar day after 12:01 AM on November 23, 2016. An entire calendar day will be charged for any period of time within a calendar day that the road remains restricted to two lanes beyond 12:01 AM on November 23, 2016.

Interim Completion of Work 12/22/2016
If the contractor fails to complete all concrete paving as shown in Stage 4 and coordination measures necessary on the Bluemound Road entrance ramp to northbound USH 45 to restore traffic on the ramp prior to 12:01 AM on December 23, 2016, the department will assess the contractor $10,000 in interim liquidated damages per day for each calendar day after 12:01 AM on December 23, 2016, that the Bluemound Road entrance ramp to northbound USH 45 is not open to vehicular traffic. An entire calendar day will be charged for any period of time within a calendar day that the ramp remains closed beyond 12:01 AM, on December 23, 2016.

Interim Completion of Work 5/25/2017
If the contractor fails to complete all of the work necessary to open Wisconsin Avenue to all traffic lanes in each direction including:

- Wisconsin Avenue Bridge, B-40-876 and retaining walls and approach pavements;
- Wisconsin Avenue pavement, pavement marking, sidewalks, signage and lighting;
- 97th Street pavement, pavement marking sidewalks and signing;
- Noise Wall N-40-62;
- The 95th Street traffic signal and all associated detection, signage, pedestrian heads, conduit, and lighting;
- The Wisconsin/94th Street intersection including all approaches, pavement marking, sidewalks, lighting, and signage;
- The Wisconsin/95th Street intersection including all approaches, pavement marking, sidewalks, lighting, and signage;
- The Wisconsin/97th Street intersection including all approaches, pavement marking, sidewalks, lighting, and signage;
- The Wisconsin/98th Street intersection including all approaches, pavement marking, sidewalks, lighting, and signage;

- Wisconsin Avenue work at and east of 94th Street including pavement marking sidewalks, lighting and signage;
- Wisconsin Avenue work at and west of 98th Street including pavement marking sidewalks, lighting and signage.

Prior to 12:01 AM on May 26, 2017, the department will assess the contractor $15,000 in interim liquidated damages per day for each calendar day after 12:01 AM on May 26, 2017. An entire calendar day will be charged for any period of time within a calendar day that the road remains closed beyond 12:01 AM on May 26, 2017.

Interim Completion of Work northbound USH 45 Lane Reduction
If the contractor fails to complete all work and coordination measures necessary on northbound USH 45 to restore traffic to 3 lanes within 14 calendar days of the closure date, the department will assess the contractor $50,000 in interim liquidated damages for each calendar day that the ramp remains closed after 12:01 AM, on the 15th calendar day after the closure begins. An entire calendar day will be charged for any period of time within a calendar day that the ramp remains closed beyond 12:01 AM, on the 15th day, the roadway is not open to three lanes.

Interim Completion of Work Greenfield Avenue Exit Ramp
If the contractor fails to complete all concrete paving as shown in Stage 2 and coordination measures necessary on the northbound IH 894/USH 45 exit ramp to Greenfield Avenue to restore traffic on the ramp within 21 calendar days of the closure date, the department will assess the contractor $10,000 in interim liquidated damages for each calendar day that the ramp remains closed after 12:01 AM, on the 22nd calendar day after the closure begins. An entire calendar day will be charged for any period of time within a calendar day that the ramp remains closed beyond 12:01 AM, on the 22nd day, the exit ramp is not open.

Interim Completion of Work STH 100 Exit Ramp
If the contractor fails to complete all concrete paving as shown in Stage 2 and coordination measures necessary on the eastbound IH 94 exit ramp to STH 100 to restore traffic on the ramp within 21 calendar days of the closure date, the department will assess the contractor $10,000 in interim liquidated damages for each calendar day that the ramp remains closed after 12:01 AM, on the 22nd calendar day after the closure begins. An entire calendar day will be charged for any period of time within a calendar day that the ramp remains closed beyond 12:01 AM, on the 22nd day, the exit ramp is not open.

Interim Completion of Work 05/25/2017
If the contractor fails to complete all of the work necessary to open Structure B-40-856 and the pavement for the system ramp W-N that carries traffic from eastbound IH 94 to northbound USH 45 prior to 12:01 AM on May 26, 2017, the department will assess the contractor $30,000 in interim liquidated damages per day for each calendar day after 12:01 AM on May 26, 2017, that the W-N Ramp is not open to vehicular traffic. An entire calendar day will be charged for any period of time within a calendar day that the ramp remains closed beyond 12:01 AM, on May 26, 2017.

Interim Completion of Work 06/27/2017
If the contractor fails to complete all of the work necessary to open Structure B-40-853 and the pavement for the system ramp N-E that carries traffic from southbound USH 45 to eastbound IH 94 prior to 12:01 AM on June 28, 2017, the department will assess the contractor $50,000 in interim liquidated damages per day for each calendar day after 12:01 AM on June 28, 2017, that the N-E Ramp is not open to vehicular traffic. An entire calendar day will be charged for any period of time within a calendar day that the ramp remains closed beyond 12:01 AM, on June 28, 2017.

Interim Completion of Work 11/21/2017
If the contractor fails to complete all concrete paving as shown in Stage 6 and coordination measures necessary on the STH 100 entrance ramp to westbound IH 94 to restore traffic on the ramp prior to 12:01 AM on November 22, 2017, the department will assess the contractor $10,000 in

interim liquidated damages per day for each calendar day after 12:01 AM on November 22, 2017, that the STH 100 entrance ramp to westbound IH 94 is not open to vehicular traffic. An entire calendar day will be charged for any period of time within a calendar day that the ramp remains closed beyond 12:01 AM, on November 22, 2017.

Interim Completion of Work 11/21/2017
If the contractor fails to complete all of the work necessary to open Structure B-40-854 and the pavement for the system ramp E-S that carries traffic from westbound IH 94 to southbound IH 894/USH 45 prior to 12:01 AM on November 22, 2017, the department will assess the contractor $30,000 in interim liquidated damages per day for each calendar day after 12:01 AM on November 22, 2017, that the E-S Ramp is not open to vehicular traffic. An entire calendar day will be charged for any period of time within a calendar day that the ramp remains closed beyond 12:01 AM, on November 22, 2017.

Interim Completion of Work National Avenue Entrance Ramp
If the contractor fails to complete all concrete paving, shoulder and concrete barrier work, as shown in Stage 7 and coordination measures necessary on IH 894/USH 45 and the National Avenue entrance ramp to southbound IH 894/USH 45 to restore traffic on the ramp within 21 calendar days of the closure date, the department will assess the contractor $10,000 in interim liquidated damages for each calendar day that the ramp remains closed after 12:01 AM, on the 22nd calendar day after the closure begins. An entire calendar day will be charged for any period of time within a calendar day that the ramp remains closed beyond 12:01 AM, on the 22nd day, the entrance ramp is not open.

Interim Completion of Work 12/21/2017
If the contractor fails to complete all work to get into Stage 8 traffic configuration, as shown in the plans, prior to 12:01 AM on December 22, 2017, the department will assess the contractor $25,000 in interim liquidated damages per calendar day, or portion thereof, for each calendar day after 12:01 AM on December 22, 2017, that the project is not into Stage 8 traffic configuration. An entire calendar day will be charged for any period of time within a calendar day that the project is not into Stage 8 traffic configuration beyond 12:01 AM December 22, 2017.

Interim Completion of Work 08/29/2018
If the contractor fails to complete all of the work necessary to open to full width and in final configuration all travelled roadway and shoulder lanes, all final pavement marking, signage, traffic control devices, and safety appurtenances by 12:01 AM on August 30, 2018, the department will assess the contractor $50,000 in interim liquidated damages per calendar day for each calendar day after 12:01 AM on August 30, 2018, that this work is not completed. An entire calendar day will be charged for any period of time within a calendar day that this work remains uncompleted beyond 12:01 AM, on August 30, 2018.

Final Completion of Work
If contract time expires prior to completing all work specified in the contract, additional liquidated damages will be affixed according to standard spec 108.11.

123. Luminaires Utility LED B, Item 659.1120; Luminaires Utility LED D, Item 659.1130.

Replace entire article language with the following:

Supplement standard spec 659.2 with the following:

(2) The luminaire shall be equipped with a 10KV surge protection. Test surge protection in accordance to ANSI/IEEE C62.45 per ANSI/IEEE C62.42.2 scenario 1 category C high exposure 10KV/10VA waveforms.

(4) Furnish each luminaire with an ANSI C136.40 compliant, 7-prong, locking type, photo control receptacle. Furnish and install a rain tight shorting cap.

(5) Furnish shop drawings as specified in 506.3.2, except submit 5 copies with the materials list. Ensure the drawings contain sufficient detail to allow satisfactory review and show the dimensions of all equipment shown in the plans.

206. Probeam Luminaire, Item SPV.0060.1127

Replace the section titled **B.2 Luminaire** *with the following:*

B.2 Luminaire
Luminaire housing shall be die cast from low copper content A360 aluminum with integral heat fins to optimize thermal management through convective and conductive cooling. Housing shall be designed for either wall or ceiling mounting using heavy duty stainless steel brackets. Housing shall have three ¾" NPT threaded entries for connecting with conduit raceway.

Luminaire door shall be completely sealed using a silicone gasket and secured by minimum 6 stainless steel latches or Alloy 410 stainless steel bolts with captive zinc-plated fasteners. Housing door shall be equipped with two internal hinges for easy access to internal components including drivers, surge protection, LED arrays, quick disconnect plugs and high and low voltage terminal blocks. Luminaire door shall encase prismatic borosilicate glass lens.

Complete assembly shall be tested to withstand 3G vibration per ANSI C136.31-2001 and shall be rated IP66 per IEC60529.

Replace the section titled **B.6 Ratings / Certifications** *with the following:*

B.6 Ratings / Certifications
Luminaires shall be rated and/or certified as follows:

- IP-66 minimum weather fastness rating
- IDA dark sky full cutoff compliant
- IEC 61000 - Electromagnetic Compatibility Test (EMC)
- FCC Title 47 CFR Part 18 – Federal Communication Commission
- ANSI\IEEE\C62.41
- IEEE 519 – Harmonic Control in Electrical Power Systems
- ANSI C82.77:2002 Harmonic Distortion
- ANSI C136.31:2001 – Luminaire Vibration
- ASTM B 117:2003 – Salt Spray Test
- IEC 60529 – Degrees of protection provided by enclosure
- UL 1598 – UL Wet Location @ 40C
- ROHS compliance for key components

405. Partially Removing Existing Drilled Shafts, Item SPV.0105.0050

A Description
This special provision describes partially removing the two existing drilled shaft foundations at STA 193+63, 199'LT and at STA 193+66, 175'LT to an elevation 2' below the finish grade and disposing of resulting materials in accordance to the applicable provisions of standard specifications 203 and as hereinafter provided.

The existing drilled shafts are fully reinforced concrete drilled shaft foundations. Each drilled shaft is approximately 8' in diameter and 70' deep. Both drilled shaft foundations are in conflict with

proposed grading and will be removed to an elevation 2' below the finish grade. It is anticipated that approximately the top 10' of each shaft will have to be removed.

B (Vacant)

C Construction
Remove and dispose of both of the existing drilled shaft foundations to an elevation that is 2' below the finish grade.

D Measurement
The department will measure Partially Removing Existing Drilled Shafts as a lump sum unit of work, acceptably completed.

E Payment
The department will pay for measured quantities at the contract unit price under the following bid items:

ITEM NUMBER	DESCRIPTION	UNIT
SPV.0105.0050	Partially Removing Existing Drilled Shafts	LS

Payment is full compensation for removing the drilled shafts and for hauling and disposing of all materials

406. Crash Cushions Permanent Low Maintenance and Crash Cushions Temporary.

Complete work in accordance with Section 614 of the standard specifications.

Replace section 614.2.7 with the following:

Use Model SCI 100GM Crash Attenuator from Smart Cushion Innovations (SCI) Products for permanent and temporary crash cushions.

Schedule of Items
Attached, dated August 28, 2015, are the revised Schedule of Items Pages 1 – 4, 18, 22, 46, 105, and 128 – 142.

Plan Sheets
The following 8½ x 11-inch sheets are attached and made part of the plans for this proposal: 206, 398, 957, 1621, 1664, 1924, 2353, 2862, 2868, 3850, 3852

END OF ADDENDUM

2

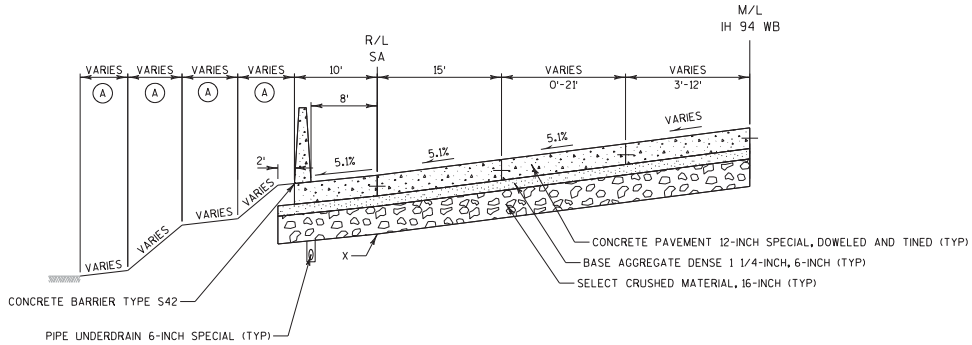

TYPICAL FINISHED SECTION
RAMP SA

STA 575SA+23.43 TO STA 577SA+88.48

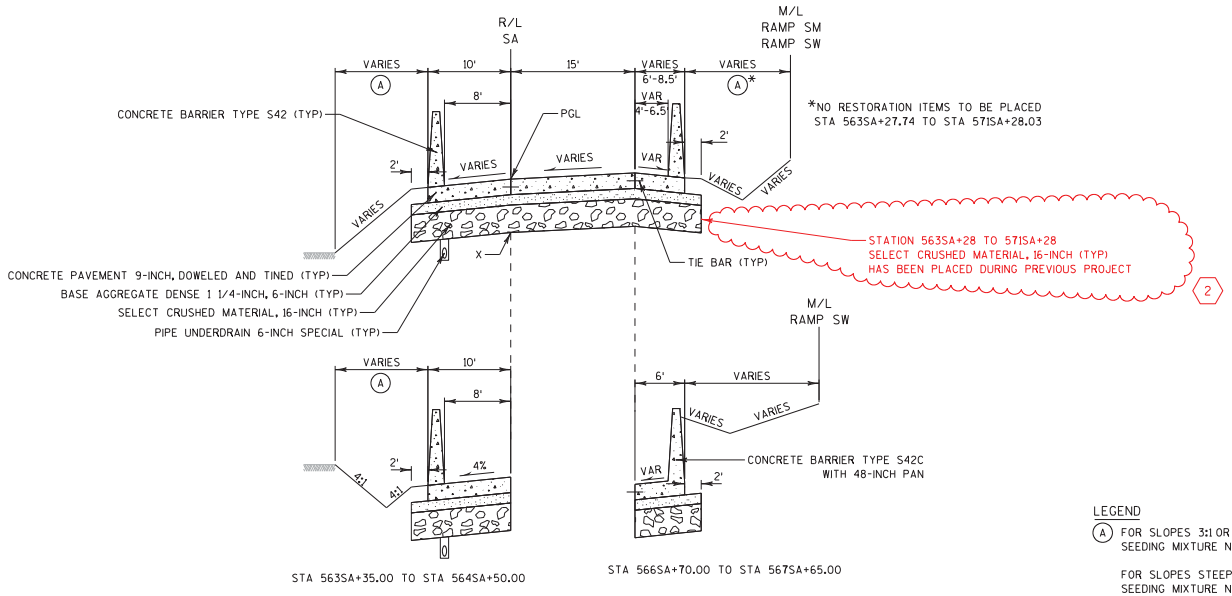

TYPICAL FINISHED SECTION
RAMP SA

STA 563SA+27.74 TO STA 571SA+28.03
STA 572SA+35.53 TO STA 575SA+23.43

Addendum No. 02
ID1060-33-81
Revised Sheet 206
August 28, 2015

NOTES

PGL = POINT REFERRED TO ON PROFILE AND PIVOT POINT FOR SUPERELEVATION
X = POINT REFERRED TO ON CROSS-SECTION
Y = CROWN POINT

LEGEND

(A) FOR SLOPES 3:1 OR FLATTER, USE 6" TOPSOIL SPECIAL, SEEDING MIXTURE NO. 30 & FERTILIZER TYPE B

FOR SLOPES STEEPER THAN 3:1, USE 6" TOPSOIL SPECIAL, SEEDING MIXTURE NO. 80 & FERTILIZER TYPE B

(B) 6" TOPSOIL SPECIAL, SEEDING MIXTURE NATIVE SEED BUTTERFLY MIX & NURSE CROP

(C) 6" TOPSOIL SPECIAL, SOD LAWN & FERTILIZER TYPE B

NOTE

LOCATIONS OF EROSION MAT ARE SHOWN ON EROSION CONTROL PLANS

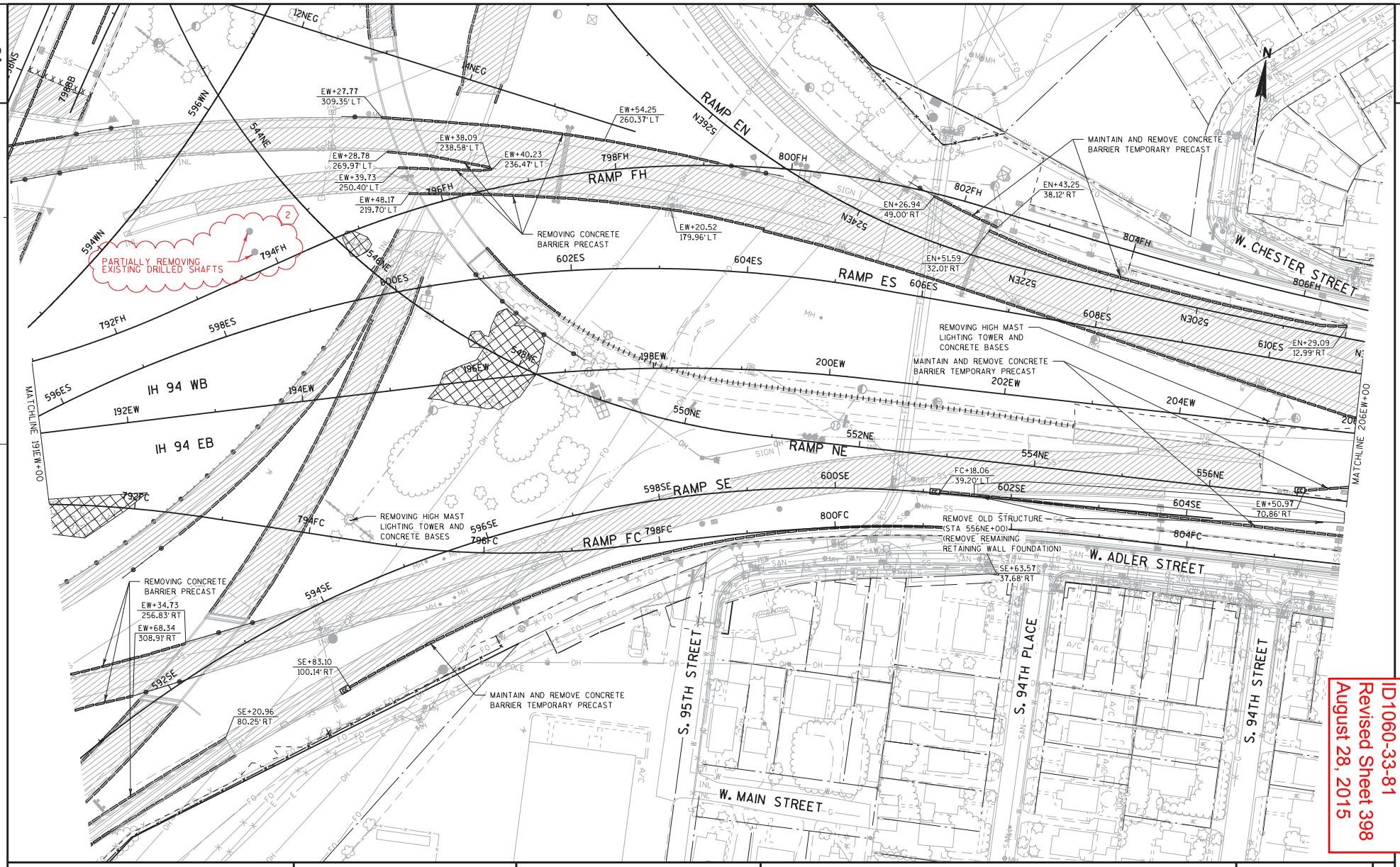

PROJECT NO:1060-33-81	HWY:IH 894/IH 94/USH 45	COUNTY:MILWAUKEE	REMOVAL PLANS	SHEET 398	E

FILE NAME : W:\Cadd\Final\10603381_Z2\Roads\cds\021120_rm.dgn PLOT DATE : 26-AUG-2015 15:15 PLOT BY : MSCD1S PLOT NAME : 021120_rm PLOT SCALE : 100:1

WISDOT/CADDS SHEET 42

Addendum No. 02
ID1060-33-81
Revised Sheet 957
August 28, 2015

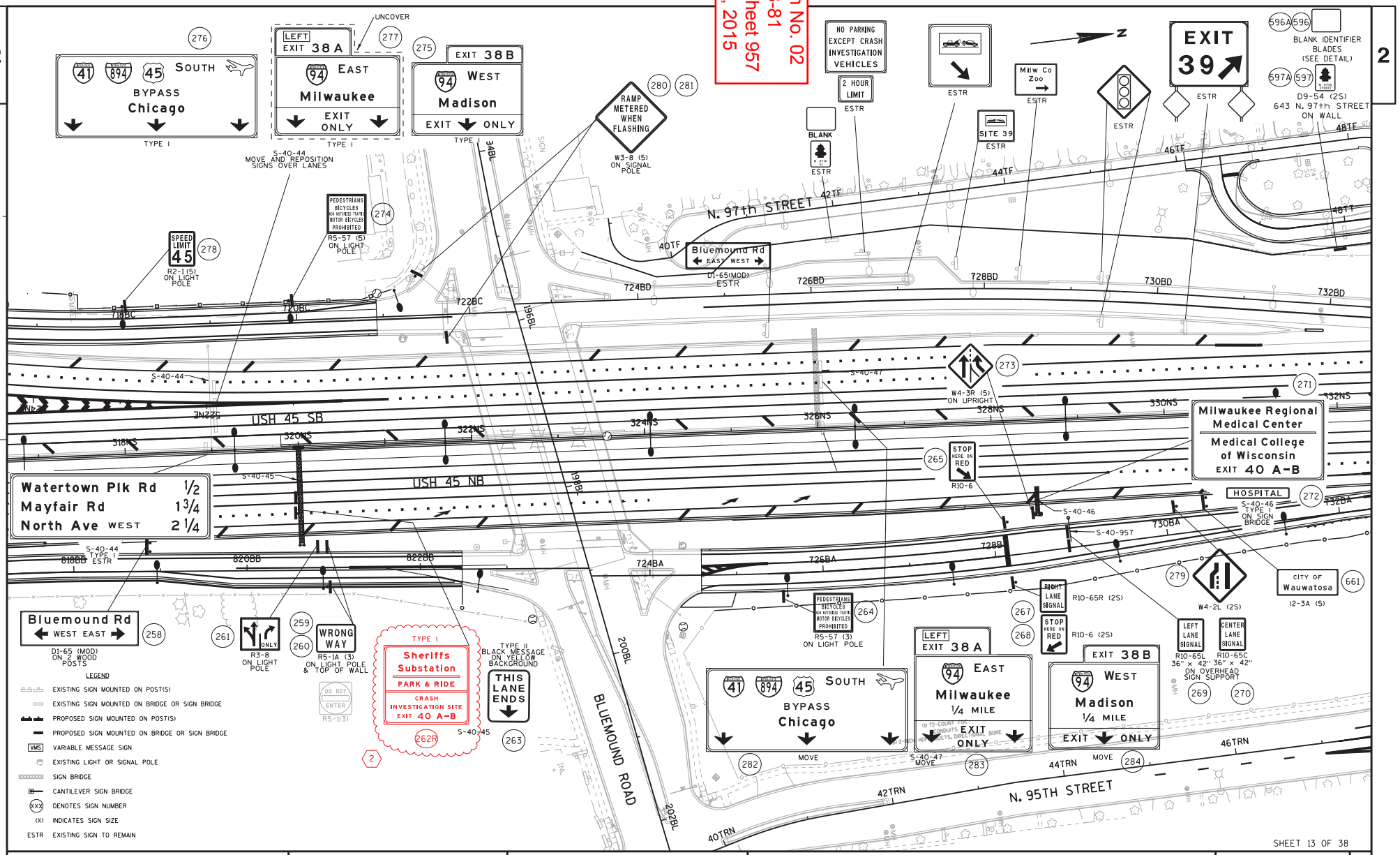

PROJECT NO:1060-33-81	HWY:IH 894/IH 94/USH 45	COUNTY:MILWAUKEE	PERMANENT SIGNING	SHEET 957	E

FILE NAME : J:\projects\d2_10603345\81\sign\023213_ps.dgn PLOT DATE : 25-AUG-2015 06:33 PLOT BY : dotcmv PLOT NAME : PLOT SCALE : 100:1 WISDOT/CADDS SHEET 42

3

REMOVING OLD STRUCTURE

CATEGORY	ROADWAY	STATION	OFFSET	203.0200.0021 REMOVING OLD STRUCTURE (STA 236NS+00) LS	203.0200.0022 REMOVING OLD STRUCTURE (STA 252NS+65) LS	203.0200.0023 REMOVING OLD STRUCTURE (STA 253NS+50) LS	203.0200.0025 REMOVING OLD STRUCTURE (STA 155EW+25) LS	203.0200.0026 REMOVING OLD STRUCTURE (STA 159EW+00) LS	203.0200.0027 REMOVING OLD STRUCTURE (STA 556NE+00) LS	203.0200.0028 REMOVING OLD STRUCTURE (STA 734BA+50) LS	203.0200.0029 REMOVING OLD STRUCTURE (STA 345NS+00) LS	COMMENTS
	MAINLINE											
1000	IH 894/ USH 45 NS											
		236NS+00	LT	1	--	--	--	--	--	--	--	REMOVE REMAINING FOUNDATIONS OF S-40-44
		252NS+65	LT	--	1	--	--	--	--	--	--	REMOVE REMAINING FOUNDATION OF S-40-156
		253NS+50	LT	--	--	1	--	--	--	--	--	REMOVE REMAINING PIERS OF B-40-128
		345NS+00	LT	--	--	--	--	--	--	--	1	REMOVE SIGN STRUCTURE FOUNDATION
	IH 94 WB											
		155EW+50	LT/RT	--	--	--	1	--	--	--	--	REMOVE REMAINING FOUNDATION OF B-40-109 AND B-40-110
		159EW+00	LT	--	--	--	--	1	--	--	--	REMOVE REMAINING PIERS AND FOUNDATION OF B-40-106
	RAMPS											
	RAMP NE											
		556NE+00		--	--	--	--	--	1	--	--	REMOVE REMAINING RETAINING WALL FOUNDATION
	RAMP BA											
		734BA+50		--	--	--	--	--	--	1	--	REMOVE REMAINING CENTER PIER FOUNDATION
	LOCAL ROADS											
	HANK AARON STATE TRAIL											
		180HA+50	LT	--	--	--	--	--	--	--	--	BOX CULVERT AT HANK AARON STATE TRAIL
	TOTAL			1	1	1	1	1	1	1	1	

1

Addendum No. 02
ID1060-33-81
Revised Sheet 1621
August 28, 2015

REMOVING CONCRETE SURFACE PARTIAL DEPTH

CATEGORY	STAGE	ROADWAY	STATION	TO	STATION	OFFSET	204.0109.S REMOVING CONCRETE SURFACE PARTIAL DEPTH SF
		LOCAL ROADS					
1000	3	N. 97TH STREET					
			46TF+09	-	49TF+05	RT/LT	7,771
		TOTAL					7,771

PARTIALLY REMOVING EXISTING DRILLED SHAFTS

2

CATEGORY	ROADWAY	STATION	OFFSET	SPV.0105.0050 PARTIALLY REMOVING EXISTING DRILLED SHAFTS LS
	MAINLINE			
1000	IH 94 WB			
		193EW+65	LT	1
	TOTAL			1

REMOVING PAVEMENT

CATEGORY	STAGE	ROADWAY	STATION	TO	STATION	OFFSET	204.0100 REMOVING PAVEMENT SY
		MAINLINE					
1000	1	IH 894/ USH 45 SB					
			286NS+20	-	288NS+58	LT	1,231
			289NS+79	-	295NS+46	LT	3,111
			296NS+82	-	300NS+31	LT	1,433
		IH 94 EB					
			113EW+10	-	125EW+66	LT/RT	1,537
		IH 94 WB					
			113EW+02	-	125EW+73	LT	2,891
		RAMPS					
		RAMP WS					
			580WS+24	-	585WS+78	LT/RT	1,703
		RAMP ES					
			592ES+30		593SE+52	LT	394
		SUBTOTAL					12,300
		MAINLINE					
1000	2	IH 894/ USH 45 NB					
			203NS+29	-	219NS+00	RT	2,603
			227NS+00	-	228NS+66	RT	210

REMOVING PAVEMENT

CATEGORY	STAGE	ROADWAY	STATION	TO	STATION	OFFSET	204.0100 REMOVING PAVEMENT SY
			231NS+03	-	236NS+61	RT	371
		IH 894/ USH 45 SB					
			268NS+00	-	279NS+39	LT/RT	1,636
			280NS+80	-	284NS+77	LT	733
			327NS+00	-	333NS+60	RT	1,437
			335NS+31	-	349NS+45	RT	7,618
		IH 94 EB					
			88EW+00	-	99EW+49	RT	2,184
			101EW+72	-	111EW+43	RT	1,033
			113EW+02	-	122EW+32	RT	1,222
		RAMPS					
		RAMP LA					
			703LA+32	-	710LA+03	LT/RT	2,184
		RAMP GA					
			756GA+45	-	762GA+09	LT/RT	1,611
		RAMP GB					
			740GB+67	-	743GB+31	LT	397

(CONTINUED ON NEXT SHEET)

3

EARTH WORK SUMMARY (CONTINUED)

Division	From/To Station			Location	205.0100 Excavation Common (CY) (1)	SPV. 0035.0100 EBS Excavation (CY) (3)	Salvaged/ Unusable Pavement Material (CY)	Available Material (4)	SPV. 0035.0101 EBS Backfill (CY) (3)	Unexpanded Fill (5)	Expanded Fill (6)	Mass Ordinate +/- (7)	Waste (8)	Borrow	Comment:
					Cut (2)				Factor 1.00		Factor 1.20			Item 208.0100	
5				MAINLINE											
	162+00	TO	180+00	IH 94 EB	15,205	213	960	14,245	213	844	1,013	13,232	13,232	0	
				RAMPS											
	560+45	TO	566+11	WS	0	0	0	0	0	1,159	1,391	-1,391	-1,391	0	
	550+81	TO	564+96	NE	1,390	19	0	1,390	19	539	647	743	743	0	
	597+34	TO	601+30	SE	601	8	29	572	8	751	902	-330	-330	0	
	566+78	TO	575+34	SB	2,792	39	290	2,502	39	670	804	1,697	1,697	0	
	801+60	TO	809+22	FC	615	9	500	114	9	0	0	114	114	0	
				TEMPORARY											
	9+58	TO	19+06	RAMP NSM	728	10	261	467	10	86	103	365	365	0	2
	15+10	TO	21+31	RAMP EWU	252	4	153	99	4	35	42	57	57	0	
	11+00	TO	17+29	RAMP EWV	231	3	0	231	3	5	6	225	225	0	
	10+28	TO	19+67	RAMP ENA	3,899	55	22	3,877	55	594	713	3,164	3,164	0	
	11+00	TO	15+47	RAMP SWD	111	2	0	111	2	85	102	9	9	0	
				GRADING											
	11+15	TO	13+30	SW CORE POND (PSW)	18,913	265	0	18,913	265	1	1	18,912	18,912	0	
Division 5 Subtotal Stage 5					44,736	626	2,215	42,520	626	4,769	5,722	36,798	36,798	0	

Addendum No. 02
ID1060-33-81
Revised Sheet 1664
August 28, 2015

(CONTINUED ON NEXT SHEET)

TYPE I & II PERMANENT SIGNING

1060-33-81 Zoo Core 2

SIGN NO.	SIGN CODE & SIZE	SIGN MESSAGE	SIGN SIZE W x H [IN.] x [IN.]	637.2210 SIGNS TYPE II REFLECTIVE H [SF]	637.2230 SIGNS TYPE II RELFECTIVE F [SF]	637.2215 SIGNS TYPE II REFLECTIVE H FOLDING [SF]	638.3000 REM SMALL SIGN SUP [EA]	638.2102 MOVING SIGNS TYPE II [EA]	634.0618 POSTS WOOD 4" X 6" X 18' [EA]	634.0622 POSTS WOOD 4" X 6" X 22' [EA]	634.0816 POSTS TUBULAR STEEL 2" X 2" X 16' [EA]	643.0920 TRAFFIC CONTROL COVERING SIGNS TYPE II [EA]	MOUNT ON SAME POST AS SIGN #	REMARKS / NEW SIGN LOCATION	TYPE I SIGN SIZE W x H [FT.] x [FT.]	637.1220 SIGNS TYPE I REFLECTIVE SH [SF]	637.1230 SIGNS TYPE I REFLECTIVE F [SF]	643.0910 TRAFFIC CONTROL COVERING SIGNS TYPE I [EA]	638.2101 MOVING SIGNS TYPE I [EA]	638.3100 REM STR STEEL SIGN SUP [EA]	STEEL POST TYPE	636.0100 SIGN SUPPORTS CONCRETE MASONRY [CY]	636.0500 SIGN SUPPORTS STEEL REINF. [LBS]	635.0200 SIGN SUPPORTS STRUCTURAL STEEL HS [EST.LBS]	635.0300 SIGN SUPPORTS REPLACING BASE CONN. BOLTS [EA]	SPV.0060.0416 SIGN SUPPORT SPECIAL MOUNTING [EA]	PHASE SIGN TO BE INSTALLED	INFO ONLY-POST LENGTHS TO BE VERIFIED BY CONTRACTOR: POST NO 1 LENGTH [FT]	POST NO 2 LENGTH [FT]	OFF SET DISTANCE [FT]	DIST BTWN POSTS "S" [FT]
258	D1-65 (MOD)	BLUEMOUND RD	102 X 30	21.250						2																	8				
		[A] WEST EAST [A]																													
259	R5-1A (3)	WRONG WAY	42 X 30	8.750										MOUNT ON LIGHT POLE & TOP OF WALL													8				
260	R5-1A (3)	WRONG WAY	42 X 30	8.750										MOUNT ON LIGHT POLE & TOP OF WALL													8				
261	R3-8 (2S)	LEFT, AHEAD/RIGHT ONLY	36 X 30	7.500									259	MOUNT ON LIGHT POLE													8				
262R		SHERIFFS	2											MOUNT ON SIGN BRIDGE S-40-45	14 X 13	182.00											4				
		SUBSTATION												I BEAMS INCIDENTAL																	
		PARK & RIDE																													
		CRASH																													
		INVESTIGATION SITE																													
		EXIT 40 A-B																													
263	W9-62 (5)	THIS	72 X 90		45.000									MOUNT ON SIGN BRIDGE S-40-45													4				
		LANE												I BEAMS INCIDENTAL																	
		ENDS												YELLOW BACKGROUND. BLACK LETTERS.																	
		[A]																													
264	R5-57 (5)	PEDS, ETC PROHIBITED	36 X 36	9.000										MOUNT ON LIGHT POLE													4				
265	R10-6 (MOD) (2S)	STOP HERE ON RED [A]	24 X 36	6.000					1																		4				
266	NOT USED																														
267	R10-65R (2S)	RIGHT LANE SIGNAL	24 X 30	5.000					1																		4				
268	R10-6 (2S)	STOP HERE ON RED [A]	24 X 36	6.000									267														4				
269	R10-65L (MOD)	LEFT LANE SIGNAL	36 X 42	10.500										MOUNT ON S-40-957 OVERHEAD SIGN SUPPORT													4				
270	R10-65C (MOD)	CENTER LANE SIGNAL	36 X 42	10.500										MOUNT ON S-40-957 OVERHEAD SIGN SUPPORT													4				
271	E3-1	MILWAUKEE REGIONAL												MOUNT ON SIGN BRIDGE S-40-46	19 X 11.5	218.50											4				
		MEDICAL CENTER												I BEAMS INCIDENTAL																	
		MEDICAL COLLEGE																													
		OF WISCONSIN																													
		EXIT 40 A-B																													
272		HOSPITAL											271	MOUNT ON SIGN BRIDGE S-40-46	9 X 1.5	13.50											4				
														BLUE BACKGROUND. WHITE LETTERS. I BEAMS INCIDENTAL.																	
273	W4-3R (5)	MERGE ADDED LANE FROM R	48 X 48		16.000									MOUNT ON UPRIGHT OF S-40-46													4				
274	R5-57 (5)	PEDS, ETC PROHIBITED	36 X 36	9.000										MOUNT ON LIGHT POLE													4				
275	E6-1													REPOSITION EXISTING SIGN OVER LANES				1									4				
276	E6-1													REPOSITION EXISTING SIGN OVER LANES				1									4				
277	E6-1													REPOSITION EXISTING SIGN OVER LANES				1									4				
														UNCOVER EXISTING SIGN. SEE WZ QTY & PLANS.																	
278	R2-1 (5)	SPEED LIMIT 45	48 X 60	20.000										MOUNT ON LIGHT POLE													6				
279	W4-2L (2S)	LANE REDUCTION TRANSITION	36 X 36		9.000				1																		4				
280	W3-8 (5)	RAMP METERED WHEN FLASH	48 X 48		16.000									MOUNT ON SIGNAL POLE													6				
281	W3-8 (5)	RAMP METERED WHEN FLASH	48 X 48		16.000									MOUNT ON SIGNAL POLE													6				
282	E6-1																	1									4				
283	E6-1																	1									4				
284	E6-1																	1									4				
285	EXISTING ASSEMBLY											1		UNCOVER EXISTING SIGN. SEE WZ QTY & PLANS.													4				
286	EXISTING ASSEMBLY											1		UNCOVER EXISTING SIGN. SEE WZ QTY & PLANS.													4				
287	A11-17 (MOD)											1		UNCOVER EXISTING SIGN. SEE WZ QTY & PLANS.													4				
288	EXISTING ASSEMBLY											1		UNCOVER EXISTING SIGN. SEE WZ QTY & PLANS.													4				
289	R1-1F (3)	FOLDING STOP	36 X 36			7.460								MOUNT ON SIGNAL POLE													8				
290	R1-1F (3)	FOLDING STOP	36 X 36			7.460								MOUNT ON SIGNAL POLE													8				
291	EXISTING ASSEMBLY											1		UNCOVER EXISTING SIGN. SEE WZ QTY & PLANS.													4				
292	W12-1D (2S)	DOUBLE DOWN ARROWS	24 X 24		4.000				1					2 FOOT MOUNTING HEIGHT													8				
293	R5-1 (3)	DO NOT ENTER	36 X 36	9.000									289														8				
294	R5-1 (3)	DO NOT ENTER	36 X 36	9.000									290														8				
295	R5-1A (2S)	WRONG WAY	36 X 24	6.000									293														8				
296	R5-1A (2S)	WRONG WAY	36 X 24	6.000									294														8				
297	A11-17 (MOD)													UNCOVER EXISTING SIGN. SEE WZ QTY & PLANS.			1										6				
298	A11-17 (MOD)													UNCOVER EXISTING SIGN. SEE WZ QTY & PLANS.			1										6				
299	W3-8 (5)	RAMP METERED WHEN FLASH	48 X 48		16.000									MOUNT ON SIGNAL POLE													4				
300	W3-8 (5)	RAMP METERED WHEN FLASH	48 X 48		16.000									MOUNT ON SIGNAL POLE													4				
301	EXISTING ASSEMBLY													UNCOVER EXISTING SIGN. SEE WZ QTY & PLANS.													4				
302	NOT USED																														
303	NOT USED																														
304	M1-94 (MOD)	WISCONSIN AVE	108 X 30	22.500										MOUNT ON BRIDGE													5				
		700 NORTH												BRACKET INCIDENTAL																	
305	W4-3R (3)	MERGE ADDED LANE FROM LI	36 X 36		9.000									MOUNT ON LIGHT POLE													4				
306	R4-7 (2S)	KEEP RIGHT	24 X 30	5.000							1																5				
307	R1-1F (2S)	FOLDING STOP	30 X 30			5.180					1																5				
308	R6-2L (2S)	ONE WAY LEFT ARROW	24 X 30	5.000							1																5				
309	R1-1F (2S)	FOLDING STOP	30 X 30			5.180					1																5				
310	D1-61	N. 95TH ST	66 X 24	11.000							1																5				
		[A]																													

3

3

Addendum No. 02
ID1060-33-81
Revised Sheet 1924
August 28, 2015

Addendum No. 02
ID1060-33-81
Revised Sheet 2353
August 28, 2015

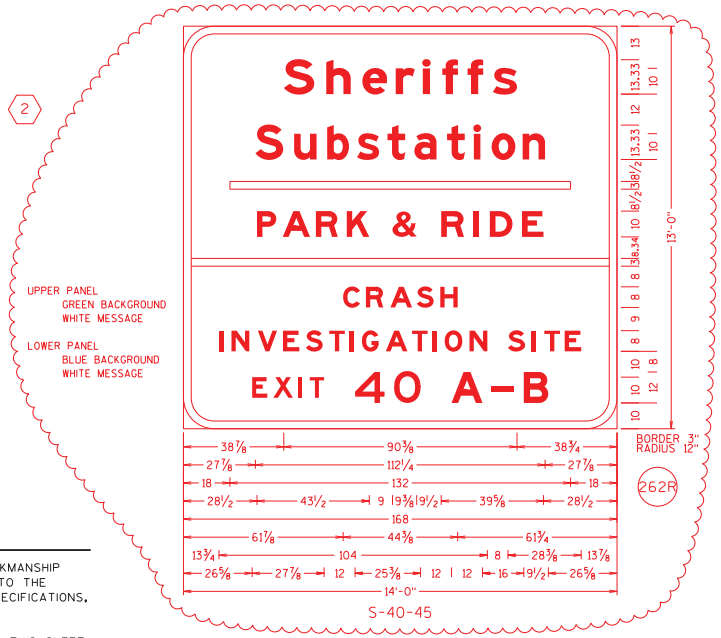

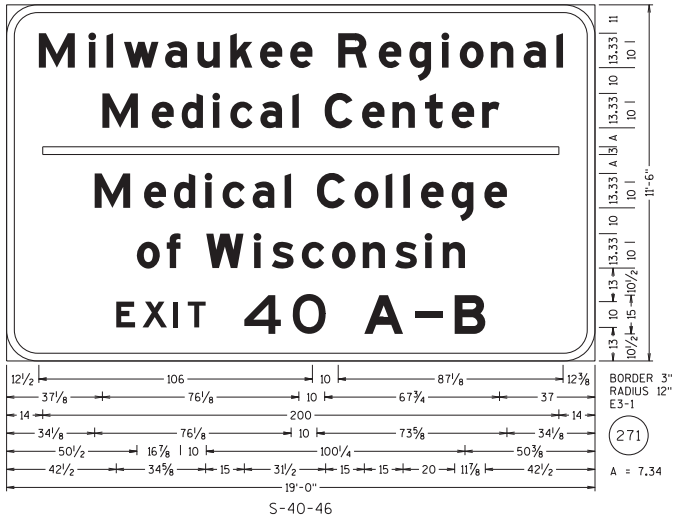

GENERAL NOTES:

1. DETAILS OF CONSTRUCTION, MATERIALS, AND WORKMANSHIP NOT SHOWN ON THIS DRAWING SHALL CONFORM TO THE PERTINENT REQUIREMENTS OF THE STANDARD SPECIFICATIONS, THE SPECIAL PROVISIONS, AND THE PLANS.
2. UNLESS OTHERWISE NOTED, ALL SIGNS SHOWN ON THIS SHEET ARE "SIGNS, TYPE I".
3. UNLESS OTHERWISE NOTED, TYPE II SIGNS ON THIS SHEET SHALL HAVE "TYPE H REFLECTIVE SHEETING" AND, "TYPE H MESSAGE MATERIAL". TYPE I SIGNS SHALL HAVE TYPE SH REFLECTIVE SHEETING.
4. UNLESS OTHERWISE NOTED, ALL SIGNS SHOWN ON THIS SHEET SHALL HAVE A GREEN BACKGROUND AND WHITE MESSAGE.
5. TYPE II SIGNS ALL UPPER CASE MESSAGE (EXCEPT ON SHIELDS OR WHERE OTHERWISE NOTED) SHALL BE "SERIES E. ALL LOWER CASE MESSAGE WITH AN INITIAL UPPER CASE LETTER SHALL BE "SERIES E.
6. TYPE I SIGNS - ALL UPPER CASE MESSAGE (EXCEPT ON SHIELDS OR WHERE OTHERWISE NOTED) SHALL BE SERIES "E" MODIFIED. ALL LOWER CASE MESSAGE WITH AN INITIAL UPPER CASE LETTER SHALL BE SERIES "E" MODIFIED. ALL CAP WORDS ARE "SERIES E"
7. UNLESS OTHERWISE NOTED, ALL SIGNS SHOWN ON THIS SHEET SHALL HAVE "TYPE A" OR "TYPE C" ARROWS AS SHOWN. SEE THE STANDARD SIGN PLATES FOR FURTHER DETAILS.
8. SEE THE STANDARD SIGN PLATES FOR FURTHER DETAILS ON ROUTE MARKER SHIELDS.
9. THE SIGN NUMBER IS DENOTED IN THE CIRCLE NEAR EACH DETAIL.
10. NUMBER FRACTIONS FOR INTERCHANGE SEQUENCE SIGNS SHALL BE SERIES "E" PER PLATES A11-7 AND A11-10
11. DO NOT SCALE.

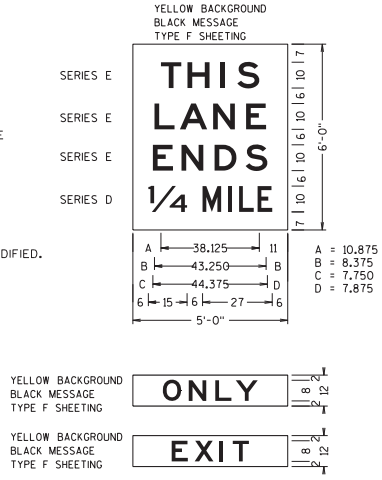

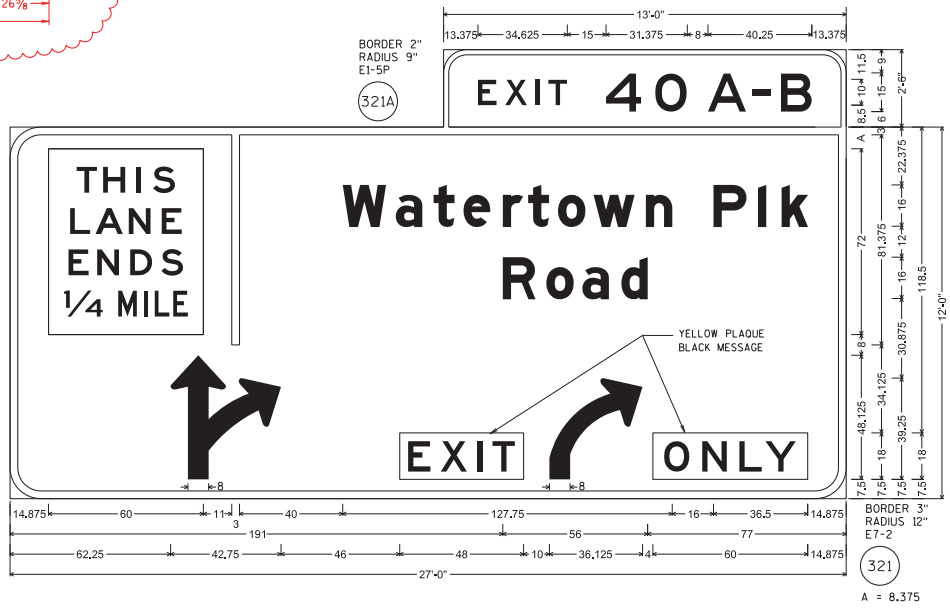

SHEET 1 OF 42

PROJECT NO:1060-33-81	HWY:IH 894/IH 94/USH 45	COUNTY:MILWAUKEE	SIGNING DETAIL - TYPE I & II SIGNS	SCALE: 0 1/2" 1"	SHEET 2353	E

FILE NAME : J:\projects\d2_10603345\81\sign\070101_ms.dgn PLOT DATE : 24-AUG-2015 15:12 PLOT BY : dotcmv PLOT NAME : PLOT SCALE : 48.125:1

WISDOT/CADDS SHEET 47

STATE PROJECT NUMBER
1060-33-81

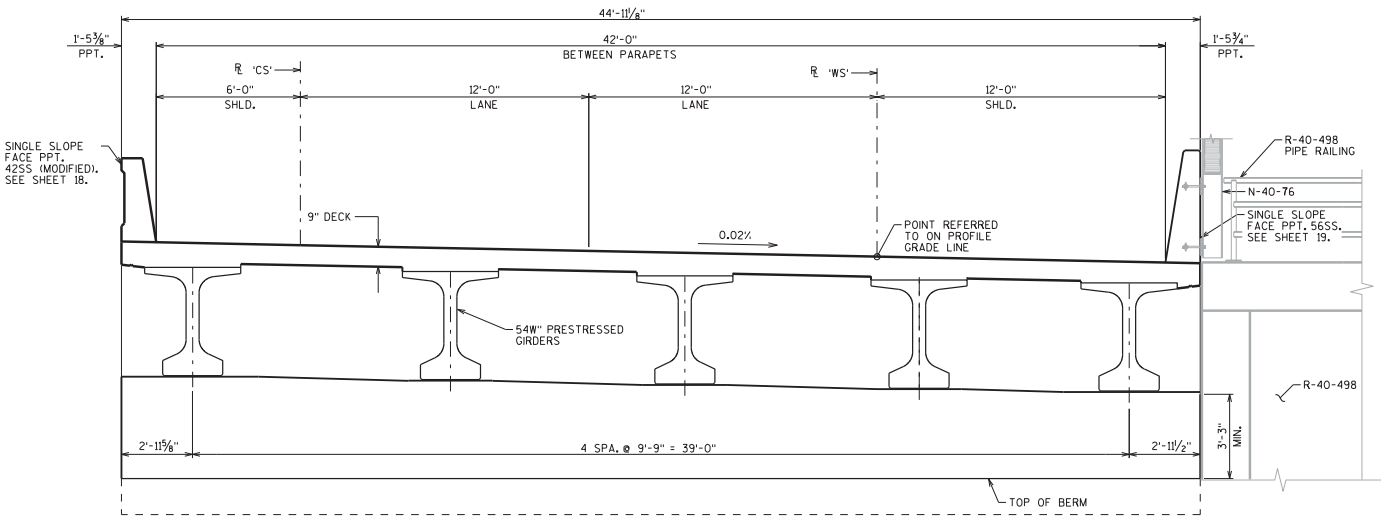

CROSS SECTION THRU ROADWAY LOOKING SOUTH

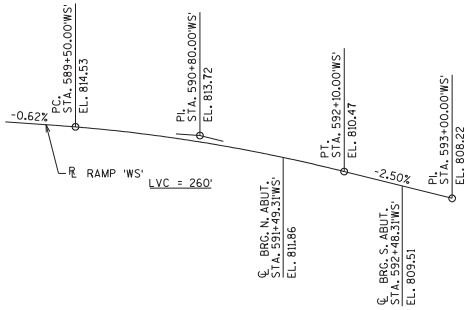

PROFILE GRADE LINE - RAMP 'WS'

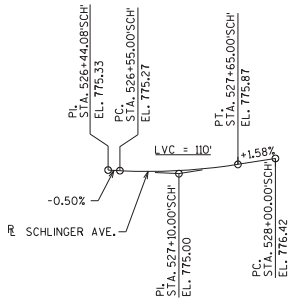

PROFILE GRADE LINE - SCHLINGER AVENUE

TOTAL ESTIMATED QUANTITIES

BID ITEM NUMBER	BID ITEMS	UNIT	SUPER.	NORTH APPR. SLAB	NORTH ABUT.	SOUTH ABUT.	SOUTH APPR. SLAB	TOTALS
203.0200.0001	REMOVING OLD STRUCTURE STA. 591WS+30	LS	—	—	—	—	—	1
203.0210.S.0007	ABATEMENT OF ASBESTOS CONTAINING MATERIAL STRUCTURE B-40-94	LS	—	—	—	—	—	1
206.1000.0006	EXCAVATION FOR STRUCTURES BRIDGES B-40-796	LS	—	—	—	—	—	1
210.0100	BACKFILL STRUCTURE	CY	—	—	50	—	—	50
305.0120	BASE AGGREGATE DENSE 1* - INCH	TON	—	140	—	—	140	280
502.0100	CONCRETE MASONRY BRIDGES	CY	—	10	32	32	12	86
502.3200	PROTECTIVE SURFACE TREATMENT	SY	590	130	—	—	130	850
503.0155	PRESTRESSED GIRDER TYPE 154W-INCH	LF	500	—	—	—	—	500
505.0405	BAR STEEL REINFORCEMENT HS BRIDGES	LB	—	—	2,500	2,520	—	5,020
505.0605	BAR STEEL REINFORCEMENT HS COATED BRIDGES	LB	34,600	10,440	—	—	10,560	55,600
505.0800.S	BAR STEEL REINFORCEMENT HS STAINLESS STRUCTURES	LB	1,570	—	—	—	—	1,570
506.2605	BEARING PADS ELASTOMERIC NON-LAMINATED	EACH	—	—	5	5	—	10
506.4000.0004	STEEL DIAPHRAGMS B-40-796	EACH	8	—	—	—	—	8
516.0500	RUBBERIZED MEMBRANE WATERPROOFING	SY	4	—	10	10	—	24
517.1010.S.0006	CONCRETE STAINING B-40-796	SF	3,060	265	210	185	215	3,935
550.1120	PILING STEEL HP 12-INCH X 53 LB	LF	—	—	690	440	—	1,130
604.0400	SLOPE PAVING CONCRETE	SY	—	—	14	—	—	14
612.0106	PIPE UNDERDRAIN 6-INCH	LF	—	—	—	45	—	45
645.0111	GEOTEXTILE FABRIC TYPE DF SCHEDULE A	SY	—	—	—	40	—	40
SPV.0035.4000	HPC MASONRY STRUCTURES	CY	232	50	—	—	50	332
SPV.0060.4105	ANCHOR ASSEMBLIES NOISE BARRIER STRUCTURES	EACH	7	2	—	—	2	11
SPV.0060.4110	PILE DYNAMIC ANALYZER (PDA) TESTING	EACH	—	—	2	2	—	4
SPV.0060.4115	PILE DYNAMIC ANALYZER (PDA) RESTRIKES	EACH	—	—	2	4	—	6 ②
SPV.0060.4116	CASE PILE WAVE ANALYSIS PROGRAM (CAP/WAP) EVALUATION	EACH	—	—	1	2	—	3
SPV.0090.4415	PILING SLEEVES	LF	—	—	170	100	—	270
SPV.0165.4700	LONGITUDINAL GROOVING BRIDGE DECK	SF	4,264	840	—	—	840	5,944
	NON-BID ITEMS							
	FILLER	SIZE	—	—	—	—	—	½" & ¾"
	EXPANDED POLYSTYRENE	SIZE	—	—	—	—	—	1"

ALL ITEMS ARE CATEGORY 2050

GENERAL NOTES

DRAWINGS SHALL NOT BE SCALED.

BAR STEEL REINFORCEMENT SHALL BE EMBEDDED 2" CLEAR UNLESS OTHERWISE SHOWN OR NOTED.

THE FIRST OR FIRST TWO DIGITS OF THE BAR MARK SIGNIFIES THE BAR SIZE.

BEVEL ALL EXPOSED EDGES *". UNLESS OTHERWISE NOTED.

COORDINATES ON THIS PLAN ARE REFERENCED TO THE WISCONSIN COUNTY COORDINATES SYSTEM (WCCS), MILWAUKEE COUNTY ZONE, NAD 83 (2007). ELEVATIONS ARE REFERENCED TO THE NORTH AMERICAN VERTICAL DATUM NAVD 88.

THE UTILITY INFORMATION SHOWN ON THESE DRAWINGS CONCERNING TYPE AND LOCATION OF UNDERGROUND UTILITIES IS NOT GUARANTEED TO BE ACCURATE OR ALL-INCLUSIVE. THE CONTRACTOR IS RESPONSIBLE FOR MAKING HIS OWN DETERMINATION AS TO TYPE AND LOCATION OF UNDERGROUND UTILITIES AS MAY BE NECESSARY TO AVOID DAMAGE. UTILITIES LABELED AS PROPOSED MAY BE INSTALLED BY OTHERS PRIOR TO THIS CONTRACT.

AT THE BACKFACE OF THE NORTH ABUTMENT ALL VOLUME WHICH CANNOT BE PLACED BEFORE ABUTMENT CONSTRUCTION AND IS NOT OCCUPIED BY THE NEW STRUCTURE SHALL BE BACKFILLED WITH STRUCTURE BACKFILL. ALSO EXCLUDED IS THE " BASE AGGREGATE DENSE 1¼" AS DETAILED ON THE STRUCTURAL APPROACH SLAB SHEETS.

LIGHT WEIGHT FOAMED CONCRETE FILL (LFCF) SHALL BE PLACED BEHIND THE SOUTH ABUTMENT THIS IS NOT A BRIDGE BID ITEM. SEE R-40-527 PLANS AND ROADWAY PLANS FOR DETAILS.

ELASTOMERIC BEARING PADS NEED NOT BE INDIVIDUALLY MOLDED PROVIDED THE CUT EDGES ARE SMOOTH AND TRUE.

THE GRADATION OF THE STRUCTURE BACKFILL SHALL MEET THE REQUIREMENTS OF SECTION 209.2.2 OF THE STANDARD SPECIFICATIONS FOR GRADE 1 MATERIAL.

PROTECTIVE SURFACE TREATMENT TO BE APPLIED TO THE ENTIRE TOP OF DECK SURFACE AND TOP OF APPROACH SLAB SURFACE AND THE FRONT FACE AND THE TOP OF THE PARAPETS, INCLUDING PARAPETS ON APPROACH SLABS.

THE SLOPE OF THE FILL IN FRONT OF THE NORTH ABUTMENT SHALL BE COVERED WITH SLOPE PAVING MATERIAL TO THE EXTENT SHOWN ON SHEET 1 AND IN THE ABUTMENT DETAILS.

THE EXISTING BRIDGE B-40-94 IS A 3 SPAN PRESTRESSED GIRDER STRUCTURE. THE ENTIRE STRUCTURE WILL BE REMOVED. SEE "CONSTRUCTION STAGING" SHEET. BRIDGE PLANS DO NOT CORRESPOND TO ROADWAY STAGES. REFER TO ROADWAY STAGING PLANS FOR ADDITIONAL INFORMATION.

THE COST OF FURNISHING AND PLACING THE SIZE 2 COARSE AGGREGATE UNDER THE SLOPE PAVING SHALL BE CONSIDERED INCIDENTAL TO "SLOPE PAVING CONCRETE."

THE CONCRETE QUANTITIES FOR THE PARAPETS, SUPERSTRUCTURE DECK, APPROACH SLABS (EXCLUDING THE FOOTING), CONCRETE DIAPHRAGMS AND HAUNCH OVER GIRDERS SHALL BE PAID FOR UNDER THE BID ITEM " HPC MASONRY STRUCTURES."

THE CONTRACTOR MUST COORDINATE THE REMOVAL OF EXISTING STRUCTURE B-40-94 AND CONSTRUCTION OF BRIDGE B-40-796 WITH RETAINING WALLS R-40-495, R-40-498, R-40-524, R-40-525 AND R-40-527.

A PORTION OF NOISE BARRIER N-40-76 WILL BE MOUNTED ON STRUCTURE B-40-796. THE PLAN DETAILS FOR STRUCTURE B-40-796 SHOW AN ASSUMED POST SPACING AND MOUNTING DETAILS FOR NOISE BARRIER. THE CONTRACTOR IS RESPONSIBLE FOR COORDINATING ACTUAL MOUNTING DETAILS, NOISE BARRIER POST SPACING AND LOCATION OF EMBEDDED ANCHORAGE ASSEMBLIES WITH THE MANUFACTURER/SUPPLIER OF THE NOISE BARRIER AND THE APPROVED NOISE BARRIER SHOP DRAWINGS.

PLANS, DIMENSIONS, QUANTITIES AND REINFORCEMENT DETAILS ARE BASED ON AN ASSUMED CONCRETE WALL PANEL THICKNESS FOR R-40-495 OF 7½ INCHES. FOR PANEL THICKNESSES OTHER THAN 7½ INCHES, THE CONTRACTOR SHALL VERIFY NORTH ABUTMENT NOTCH REINFORCEMENT BAR DETAILS AND QUANTITIES AND WILL BE RESPONSIBLE FOR ANY QUANTITY VARIATIONS.

William C. Dreher LLS 8/27/15

Addendum No. 02
ID1060-33-81
Revised Sheet 2862
August 28, 2015

NO.	DATE	REVISION	BY
②	8/25/15	PDA RESTRIKE QUANTITY	RAC

STATE OF WISCONSIN
DEPARTMENT OF TRANSPORTATION
STRUCTURES DESIGN SECTION

STRUCTURE B-40-796

DRAWN BY MJH | PLANS CK'D. RAC

CROSS SECTION & QUANTITIES

SHEET 2

2862

SCALE = 2.5

8

8

STATE PROJECT NUMBER

1060-33-81

Addendum No. 02
ID1060-33-81
Revised Sheet 2868
August 28, 2015

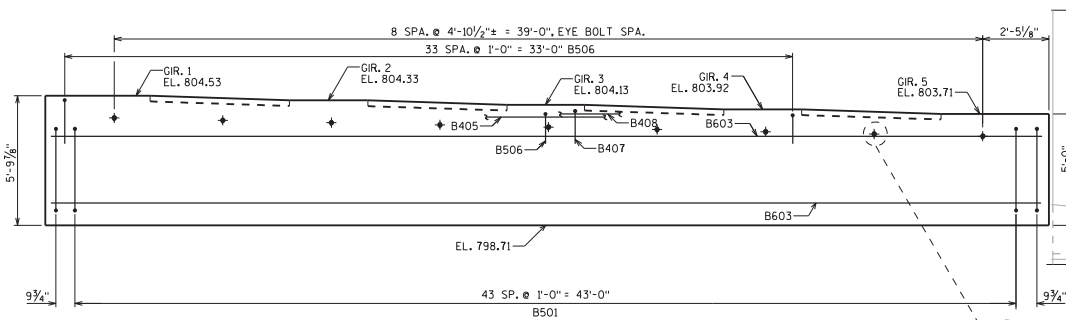

ELEVATION LOOKING SOUTH

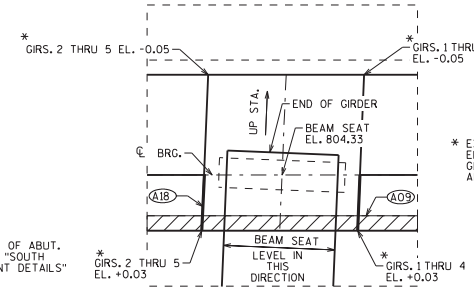

TYPICAL BEAM SEAT DETAIL

* EXTERIOR BEAM SEAT ELEVATION CORRECTIONS FOR GIRS. 1 & 5 ARE GIVEN IN THE ABUTMENT BODY PLAN VIEW.

NOTE:
LOCATE FALL PROTECTION EYE BOLTS AT SPACING SHOWN, MEASURED ALONG F.F. ABUT.

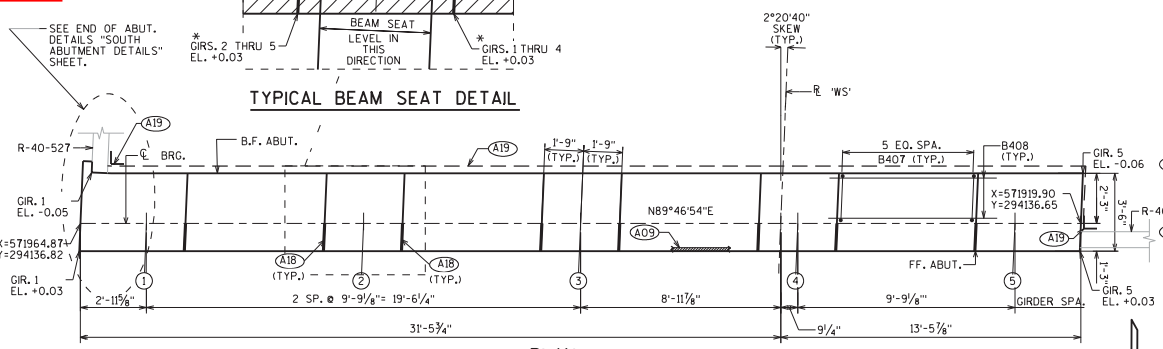

PLAN

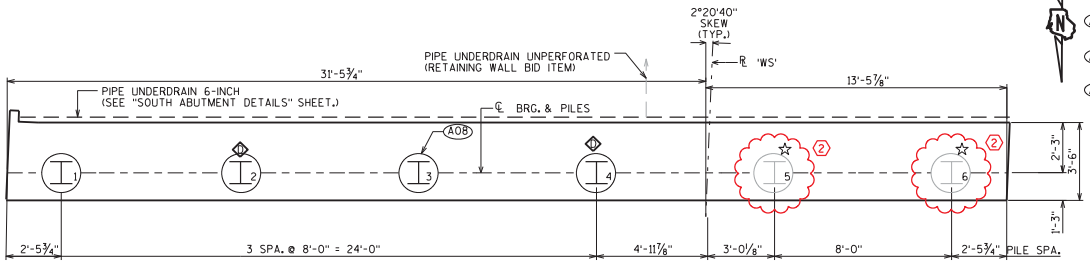

PILE PLAN

A07 SUPPORT ABUTMENT ON HP 12X53 STEEL PILING WITH A REQUIRED DRIVING RESISTANCE OF 220 TONS PER PILE AS DETERMINED BY THE PDA/CAPWAP ACCEPTANCE METHOD. ESTIMATED PILE LENGTH = 110 FEET.

A08 PILE SLEEVE NOTES

1. COORDINATE PLACEMENT OF PILING SLEEVE FOR BRIDGE B-40-796 WITH WALL R-40-525 CONSTRUCTION.
2. FOUR OF SOUTH ABUTMENT PILING SLEEVES TO BE PAID FOR WITH B-40-796.
3. SLEEVES SHALL BE PLACED FROM LOWER LIMITS OF EXCAVATION FOR MSE REINFORCED ZONE TO BOTTOM OF ABUTMENT.
4. INSTALLATION ELEVATION AT BOTTOM OF MSE REINFORCED ZONE VARIES. SEE "WALL ELEVATIONS" OF R-40-525 PLAN FOR WALL ELEVATIONS.

A09 ¾" X 4" FILLER (OUT TO OUT OF ABUT.)

A18 3/4" CORK FILLER UP VERT. BEAM SEAT FACES THAT RUN PARALLEL WITH GIRDER.

A19 18" (RMW) RUBBERIZED MEMBRANE WATERPROOFING SEAL ALL HORIZ. & VERT. JOINTS AT BACKFACE.

CUT OFF PILING IN EXISTING PIER FOOTING THAT ARE IN THE FOOTPRINT OF THE PROPOSED MSE WALL R-40-525 1'-0" BELOW BOTTOM OF PROPOSED MSE WALL LEVELING PAD. (2)

DYNAMIC PILE LOAD TESTING. THE PILE RESTRIKES ON THESE PILES SHOULD BE THE ONLY RESTRIKES CONSIDERED FOR THE PILE DRIVING CRITERIA FOR PILES #1 THRU #4.

PILES #5 & #6 ARE HP 12X53 STEEL PILING WITH 21" DIA. CORRUGATED STEEL PILING SLEEVES. THESE PILES WERE INSTALLED IN A PRIOR CONTRACT, BUT WERE NOT DRIVEN TO THE REQUIRED DRIVING RESISTANCE OF 220 TONS. RESTRIKE PILES #5 & #6 TO MEASURE THE REQUIRED DRIVING RESISTANCE AND DRIVE ADDITIONAL PILE LENGTH NEEDED TO MEET THE REQUIRED DRIVING RESISTANCE OF 220 TONS. (SEE R-40-525, CONTRACT ID 1060-33-80.)

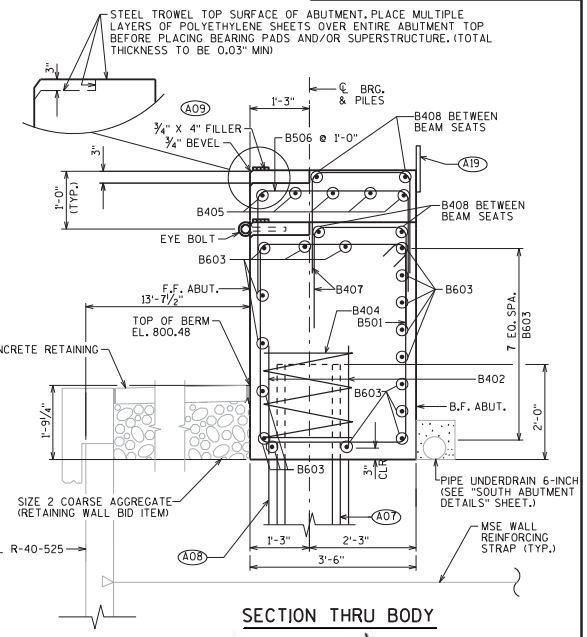

SECTION THRU BODY

William C. Dreher LLS 8/27/15

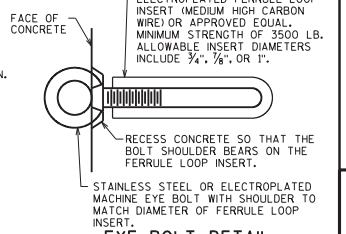

EYE BOLT DETAIL

COST INCIDENTAL TO BID ITEM "CONCRETE MASONRY BRIDGES".

NO.	DATE	REVISION	BY
2	8/25/15	PDA RESTRIKE QUANTITY	RAC

STATE OF WISCONSIN
DEPARTMENT OF TRANSPORTATION
STRUCTURES DESIGN SECTION

STRUCTURE B-40-796

DRAWN BY MJH PLANS CK'D. RAC

SOUTH ABUTMENT

SHEET 8

2868

8

8

SCALE =

STATE PROJECT NUMBER
1060-43-81

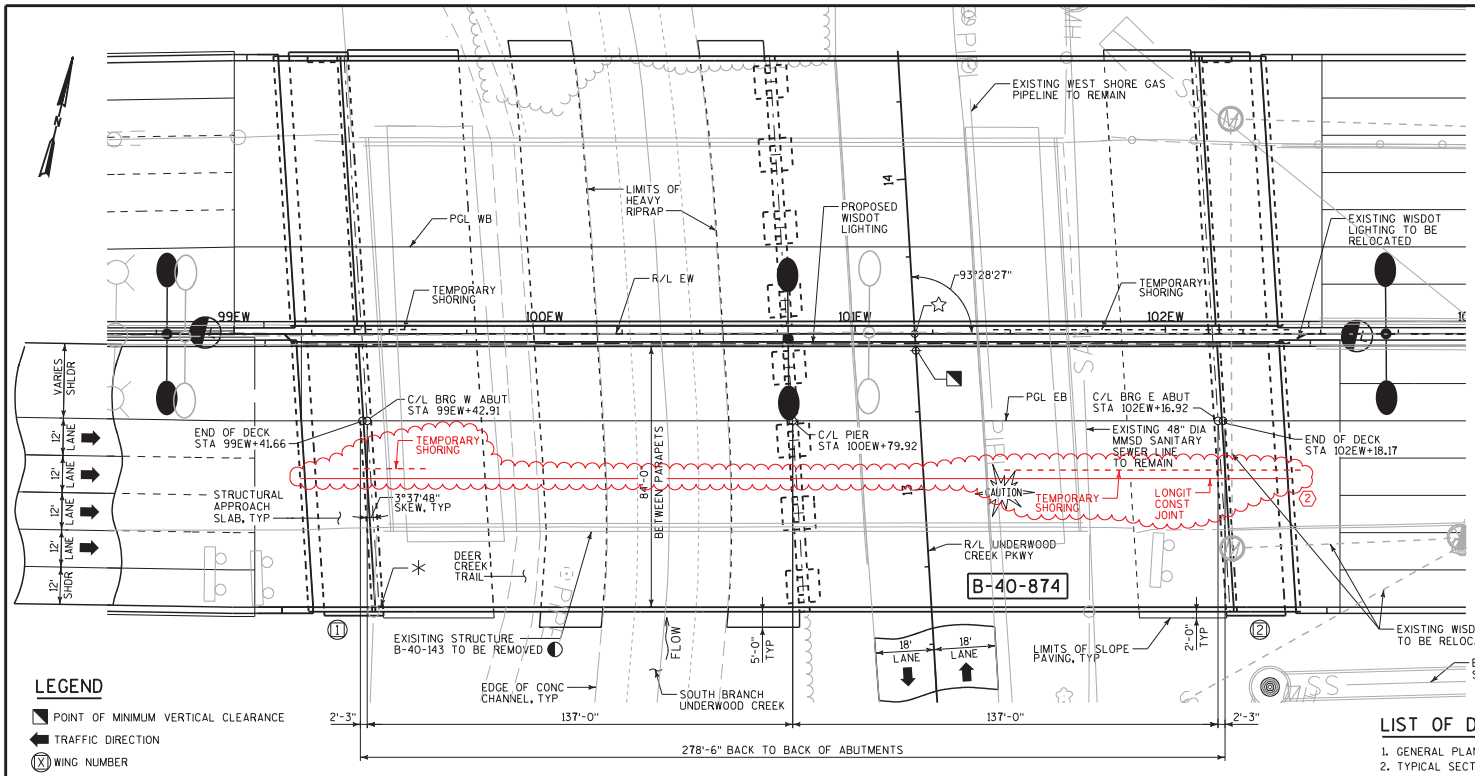

PLAN

(2 SPAN 54W" PRESTRESSED GIRDERS)

DESIGN DATA

LIVE LOAD:

DESIGN LOADING: HL-93
INVENTORY RATING FACTOR: RF = 1.12
OPERATING RATING FACTOR: RF = 1.63
WISCONSIN STANDARD PERMIT VEHICLE (WIS-SPV): 250 KIPS

STRUCTURE IS DESIGNED FOR A FUTURE WEARING SURFACE OF 20 POUNDS PER SQUARE FOOT.

MATERIAL PROPERTIES:

CONCRETE MASONRY:
- SUPERSTRUCTURE (HPC) ..... f'c = 4,000 psi
- SUBSTRUCTURE ..... f'c = 4,000 psi
- 54W-INCH PRESTRESSED GIRDERS ..... f'c = 8,000 psi

STEEL PILING ..... fy = 50,000 psi
BAR STEEL REINFORCEMENT ..... fy = 60,000 psi
PRESTRESSING STRANDS ..... ULTIMATE TENSILE STRENGTH = 270,000 psi

FOUNDATION DATA

USING THE MODIFIED GATES ACCEPTANCE METHOD

ABUTMENTS AND PIER SHALL BE SUPPORTED ON 16" CAST-IN-PLACE CONCRETE PILING DRIVEN TO A REQUIRED DRIVING RESISTANCE OF 310 TONS PER PILE AS DETERMINED BY THE MODIFIED GATES ACCEPTANCE METHOD.

THE FACTORED AXIAL RESISTANCE OF PILES IN COMPRESSION USED FOR DESIGN IS THE REQUIRED DRIVING RESISTANCE MULTIPLIED BY A RESISTANCE FACTOR OF 0.5 USING THE MODIFIED GATES ACCEPTANCE METHOD TO DETERMINE DRIVEN PILE CAPACITY.

ESTIMATED PILE LENGTHS:

WEST ABUTMENT:	45 FEET
PIER:	35 FEET
EAST ABUTMENT:	50 FEET

WISCONSIN
KARL E. SCHMID
E-30812
MILWAUKEE, WI
PROFESSIONAL ENGINEER
8/24/2015

LEGEND

- POINT OF MINIMUM VERTICAL CLEARANCE
- TRAFFIC DIRECTION
- (X) WING NUMBER
- THE EXISTING STRUCTURE B-40-143 IS TO BE REMOVED IN ITS ENTIRETY. B-40-143 IS A 3 SPAN STEEL ROLLED BEAM STRUCTURE. PLANS OF THE EXISTING STRUCTURE ARE AVAILABLE FOR REVIEW AT WISDOT SE REGION OFFICE, 141 NW BARSTOW STREET, WAUKESHA, WI, OR THROUGH THE WISDOT STRUCTURES WEBSITE.
- NAME PLATE LOCATION
- STA 101EW+19.25 R/L EW = STA 13+50.10 R/L UNDERWOOD CREEK PARKWAY

William C. Drehen SDR
08/24/14

TRAFFIC DATA

IH 94

ADT = 138,400 (2015)
ADT = 179,400 (2035)
RDS = 60 MPH

LIST OF DRAWINGS

1. GENERAL PLAN & ELEVATION
2. TYPICAL SECTIONS
3. QUANTITIES, NOTES & PROFILE GRADE LINE
4. CONSTRUCTION STAGING
5. SUBSURFACE EXPLORATION
6. WEST ABUTMENT
7. WEST ABUTMENT DETAILS
8. EAST ABUTMENT
9. EAST ABUTMENT DETAILS
10. PIER PHASE 1
11 PIER PHASE 2
12. PIER DETAILS (1 OF 2)
13 PIER DETAILS (2 OF 2)
14 54W" PRESTRESSED GIRDER
15. 54W" PRESTRESSED GIRDER DETAILS
16. STEEL DIAPHRAGM
17. SUPERSTRUCTURE FRAMING PLAN
18. SUPERSTRUCTURE REINFORCEMENT LAYOUT
19. SUPERSTRUCTURE CROSS SECTION
20. SUPERSTRUCTURE DETAILS
21. SUPERSTRUCTURE BILL OF BARS
22. WEST STRUCTURAL APPROACH SLAB
23. EAST STRUCTURAL APPROACH SLAB
24. SINGLE SLOPE PARAPET 42SS MODIFIED (1 OF 2)
25. SINGLE SLOPE PARAPET 42SS MODIFIED (2 OF 2)
26. LIGHT SUPPORT DETAILS
27. LIGHT SUPPORT REINFORCEMENT
28. AESTHETIC DETAILS
29. SLOPE PAVING DETAILS
30. ALTERNATE CONSTRUCTION JOINT DETAIL

STRUCTURES DESIGN CONTACTS

BRIDGE OFFICE:
WILLIAM DREHER (608) 266-8489
CONSULTANT:
KARL SCHMID (414) 272-2426

NO.	DATE	REVISION	BY
2	8/25/15	ADDED LONGITUDINAL CONSTR JOINT	KES

FORWARD 45

STATE OF WISCONSIN
DEPARTMENT OF TRANSPORTATION

ACCEPTED _____ _____
CHIEF STRUCTURES DESIGN ENGINEER DATE

STRUCTURE B-40-874

IH 94 EB OVER 124TH ST/UNDERWOOD CREEK

COUNTY	~~TOWN~~/CITY/~~VILLAGE~~
MILWAUKEE	WEST ALLIS

DESIGN SPEC. AASHTO LRFD BRIDGE DESIGN SPECIFICATIONS

DESIGNED BY	MS	DESIGN CK'D.	KES	DRAWN BY	MS	PLANS CK'D.	KES

GENERAL PLAN & ELEVATION

SHEET 1 OF 30

3850

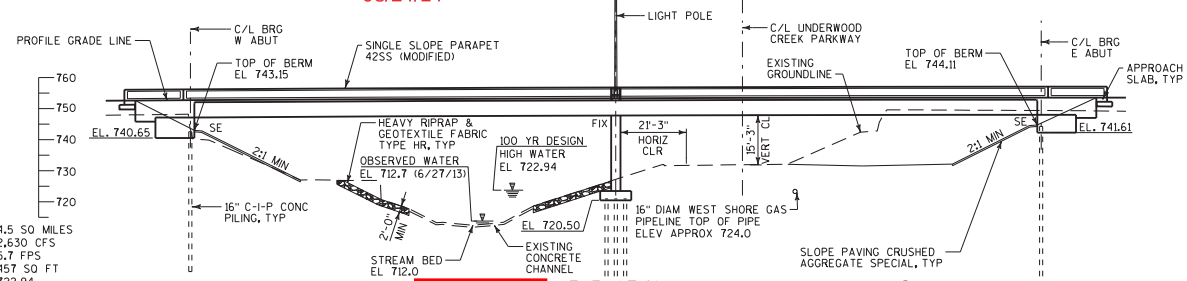

ELEVATION

(LOOKING NORTH)

HYDRAULIC DATA

DRAINAGE AREA ..... 4.5 SQ MILES
Q_{100} ..... 2,630 CFS
VELOCITY ..... 5.7 FPS
WATERWAY AREA ..... 457 SQ FT
100 YR HIGH WATER 722.94
SCOUR CODE 5
ROADWAY OVERTOPPING ..... N/A

Addendum No. 02
ID1060-43-81
Revised Sheet 3850
August 28, 2015

STATE PROJECT NUMBER
1060-43-81

TOTAL ESTIMATED QUANTITIES

ITEM NO.	BID ITEMS	UNIT	WEST APPROACH SLAB	WEST ABUTMENT	PIER	SUPER	EAST ABUTMENT	EAST APPROACH SLAB	TOTAL
203.0210.0005	ABATEMENT OF ASBESTOS CONTAINING MATERIAL STRUCTURE B-40-143	LS	---	---	---	---	---	---	1
203.0600.S.0002	REMOVING OLD STRUCTURE OVER WATERWAY WITH MINIMAL DEBRIS STATION 100EW+80	LS	---	---	---	---	---	---	1
206.1000.0022	EXCAVATION FOR STRUCTURES BRIDGES B-40-874	LS	---	---	---	---	---	---	1
210.0100	BACKFILL STRUCTURE	CY	---	265	---	---	265	---	530
305.0120	BASE AGGREGATE DENSE 1¼"-INCH	TON	273	---	---	---	---	273	546
502.0100	CONCRETE MASONRY BRIDGES	CY	24	75	150	---	75	24	348
502.3200	PROTECTIVE SURFACE TREATMENT	SY	190	---	---	2,780	---	190	3,160
503.0155	PRESTRESSED GIRDER TYPE I 54W-INCH	LF	---	---	---	3,861	---	---	3,861
505.0405	BAR STEEL REINFORCEMENT HS BRIDGES	LB	---	---	3,260	---	---	---	3,260
505.0605	BAR STEEL REINFORCEMENT HS COATED BRIDGES	LB	18,280	6,650	34,070	182,990	6,650	18,280	266,920
505.0800.S	BAR STEEL REINFORCEMENT HS STAINLESS STRUCTURES	LB	---	---	---	2,990	---	---	2,990
505.0905	BAR COUPLERS NO. 5	EACH	---	---	6	---	---	---	6
505.0909	BAR COUPLERS NO. 9	EACH	---	---	15	---	---	---	15
505.0910	BAR COUPLERS NO. 10	EACH	---	---	8	---	---	---	8
506.2605	BEARING PADS ELASTOMERIC NON-LAMINATED	EACH	---	14	---	28	14	---	56
506.4000.0017	STEEL DIAPHRAGMS B-40-874	EACH	---	---	---	52	---	---	52
511.1200.0018	TEMPORARY SHORING B-40-874	SF	---	620	---	---	3,180	---	3,800 (2)
516.0500	RUBBERIZED MEMBRANE WATERPROOFING	SY	---	19	---	---	19	---	38
517.1010.S.0106	CONCRETE STAINING B-40-874	SF	100	650	1,330	10,030	650	100	12,860
550.2168	PILING CIP CONCRETE 16 X 0.5-INCH	LF	---	585	1,260	---	650	---	2,495
606.0300	RIPRAP HEAVY	CY	---	160	160	---	---	---	320
612.0206	PIPE UNDERDRAIN UNPERFORATED 6-INCH	LF	---	20	---	---	20	---	40
612.0406	PIPE UNDERDRAIN WRAPPED 6-INCH	LF	---	100	---	---	100	---	200
645.0120	GEOTEXTILE FABRIC TYPE HR	SY	---	295	295	---	---	---	590
652.0125	CONDUIT RIGID METALLIC 2-INCH	LF	20	---	---	6	---	20	46
652.0225	CONDUIT RIGID NONMETALLIC SCHEDULE 40 2-INCH	LF	---	---	---	280	---	---	280
653.0222	JUNCTION BOXES 18X12X6-INCH	EACH	---	---	---	1	---	---	1
657.6005.S	ANCHOR ASSEMBLIES LIGHT POLES ON STRUCTURES	EACH	---	---	---	1	---	---	1
SPV.0035.4000	HPC MASONRY SUPERSTRUCTURES	CY	---	---	---	944	---	---	944
SPV.0165.4700	LONGITUDINAL GROOVING BRIDGE DECK	SF	---	---	---	25,640	---	---	25,640
SPV.0180.4800	SLOPE PAVING CRUSHED AGGREGATE SPECIAL	SY	---	350	---	---	270	---	620
	NON-BID ITEMS								
	PREFORMED JOINT FILLER	SIZE							¾"
	NON-BITUMINOUS JOINT FILLER	SIZE							¾"
	CORK FILLER	SIZE							1"
	NAME PLATE	EACH							1
	EXPANDED POLYSTYRENE	SIZE							1"

ALL BID ITEMS ARE CATEGORY 2240

GENERAL NOTES

G1. DESIGN IS IN ACCORDANCE WITH AASHTO LRFD BRIDGE DESIGN SPECIFICATIONS 6TH EDITION, 2012 WITH INTERIM REVISIONS, UNLESS OTHERWISE NOTED.

G2. DRAWINGS SHALL NOT BE SCALED.

G3. ALL DIMENSIONS ARE IN FEET AND INCHES UNLESS OTHERWISE NOTED.

G4. COORDINATES ON THIS PLAN ARE REFERENCED TO THE WISCONSIN COUNTY COORDINATE SYSTEM (WCCS), MILWAUKEE COUNTY ZONE, NAD 83 (2007). ALL STATIONS AND ELEVATIONS ARE IN FEET. ELEVATIONS ARE REFERENCED TO THE NORTH AMERICAN VERTICAL DATUM NAVD 88 (2007).

G5. THE UTILITY INFORMATION SHOWN ON THESE DRAWINGS CONCERNING TYPE AND LOCATION OF UNDERGROUND UTILITIES IS NOT GUARANTEED TO BE ACCURATE OR ALL INCLUSIVE. THE CONTRACTOR IS RESPONSIBLE FOR MAKING THEIR OWN DETERMINATIONS AS TO TYPE AND LOCATION OF UNDERGROUND UTILITIES AS MAY BE NECESSARY TO AVOID DAMAGE.

G6. NAME PLATE SHALL BE CONSIDERED INCIDENTAL TO THE BID ITEM "HPC MASONRY STRUCTURES". REFER TO S.D.D "NAME PLATE (STRUCTURES)" FOR NAME PLATE DETAILS.

G7. THE CONTRACTOR MUST COORDINATE THE REMOVAL OF EXISTING STRUCTURE B-40-143 WITH THE CONSTRUCTION OF BRIDGE B-40-874.

G8. PILE SPLICES SHALL BE MADE BY A CERTIFIED WELDER.

G9. STRUCTURE B-40-874 WILL BE CONSTRUCTURED IN TWO PHASES. STRUCTURE PHASES DO NOT CORRESPOND TO ROADWAY STAGES, SEE ROADWAY PLANS FOR COMPLETE STAGING INFORMATION.

G10. THE SLOPE OF THE FILL IN FRONT OF THE ABUTMENTS SHALL BE COVERED WITH SLOPE PAVING MATERIAL TO THE EXTENT SHOWN ON SHEET 1 AND IN THE SLOPE PAVING DETAILS.

G11. THE SLOPE OF THE EMBANKMENT ABOVE THE EXISTING CONCRETE CHANNEL SHALL BE COVERED WITH HEAVY RIPRAP AND GEOTEXTILE FABRIC TYPE 'HR' TO THE EXTENT SHOWN ON SHEET 1.

G12. ELASTOMERIC BEARING PADS NEED NOT BE INDIVIDUALLY MOLDED PROVIDED THE CUT EDGES ARE SMOOTH AND TRUE.

CONCRETE NOTES

C1. BEVEL EXPOSED EDGES OF CONCRETE ¾", UNLESS NOTED OTHERWISE.

C2. BAR STEEL REINFORCEMENT SHALL HAVE 2" CLEAR COVER, UNLESS SHOWN OTHERWISE.

C3. ALL REINFORCING BARS ARE ENGLISH. THE FIRST OR FIRST TWO DIGITS OF THE BAR MARK SIGNIFIES THE BAR SIZE. BAR DIMENSIONS ARE OUT-TO-OUT OF BAR.

C4. APPLY PROTECTIVE SURFACE TREATMENT TO THE TOP OF DECK SLAB, TOPS OF THE STRUCTURAL APPROACH SLABS, TOPS AND INSIDE FACES OF PARAPETS ALONG DECK AND STRUCTURAL APPROACH SLABS, AND TO THE PAVING NOTCH SURFACES BEFORE POURING THE STRUCTURAL APPROACH SLABS.

C5. THE HAUNCH CONCRETE QUANTITY IS BASED ON THE AVERAGE HAUNCH SHOWN ON THE PRESTRESSED GIRDERS DETAILS SHEET.

C6. THE CONCRETE QUANTITY FOR THE ABUTMENTS SHALL BE PAID FOR UNDER BID ITEM "CONCRETE MASONRY BRIDGES".

C7. THE CONCRETE QUANTITY FOR THE DECK SLAB, HAUNCHES, CONCRETE DIAPHRAGMS, AND PARAPETS SHALL BE PAID FOR UNDER BID ITEM "HPC MASONRY STRUCTURES".

C8. THE CONCRETE QUANTITY FOR THE STRUCTURAL APPROACH SLAB FOOTINGS SHALL BE PAID FOR UNDER BID ITEM "CONCRETE MASONRY BRIDGES". THE REMAINING CONCRETE QUANTITY FOR THE STRUCTURAL APPROACH SLABS, INCLUDING PARAPETS, SHALL BE PAID FOR UNDER BID ITEM "HPC MASONRY STRUCTURES".

BACKFILL NOTES

B1. AT THE BACK FACE OF ABUTMENT, ALL SPACES EXCAVATED AND NOT OCCUPIED BY THE NEW STRUCTURE OR MSE BACKFILL SHALL BE BACKFILLED WITH STRUCTURE BACKFILL.

B2. THE GRADATION OF THE STRUCTURE BACKFILL SHALL MEET THE REQUIREMENTS OF SECTION 209.2.2 OF THE STANDARD SPECIFICATIONS FOR GRADE 1 MATERIAL.

EXCAVATION NOTES

E1. THE EXISTING GROUNDLINE SHALL BE THE UPPER LIMIT OF EXCAVATION FOR STRUCTURES.

WISCONSIN KARL E. SCHMID E-30812 MILWAUKEE, WI PROFESSIONAL ENGINEER

8/24/2015

William C. Dreher SDR
08/24/15

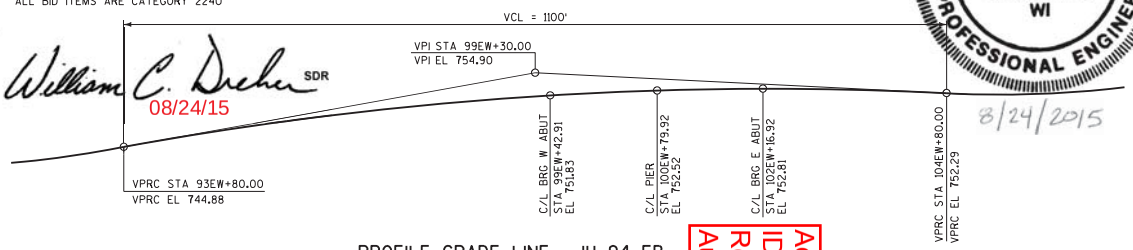

PROFILE GRADE LINE - IH 94 EB

Addendum No. 02
ID 1060-43-81
Revised Sheet 3852
August 28 2015

EXIST UNDERWOOD CREEK PARKWAY PAVEMENT ELEVATIONS

R/L UNDERWOOD CR PARKWAY STA	EXIST CROWN ELEVATION	R/L UNDERWOOD CR PARKWAY STA	EXIST CROWN ELEVATION
12+25	730.21	13+75	731.54
12+50	730.44	14+00	731.42
12+75	730.71	14+25	731.21
13+00	730.93	14+50	730.81
13+25	731.15	14+75	730.55
13+50	731.40		

NO.	DATE	REVISION	BY
2	8/25/15	QUANTITY REVISION	KES

STATE OF WISCONSIN
DEPARTMENT OF TRANSPORTATION

STRUCTURE B-40-874

DRAWN BY MS | PLANS CK'D. KES

QUANTITIES, NOTES & PROFILE GRADE LINE

SHEET 3 OF 30

3852

CONTRACT:	PROJECT(S):	FEDERAL ID(S):
20150929001	1060-33-81	WISC 2015473
	1060-34-82	N/A
	1060-43-81	WISC 2015474

CONTRACTOR :_____

LINE NO	ITEM DESCRIPTION	APPROX. QUANTITY AND UNITS	UNIT PRICE DOLLARS	UNIT PRICE CTS	BID AMOUNT DOLLARS	BID AMOUNT CTS
	SECTION 0001 Roadway Items					
0002	108.4400 CPM Progress Schedule	1.000 EACH	.		.	
0003	201.0105 Clearing	336.000 STA	.		.	
0004	201.0120 Clearing	528.000 ID	.		.	
0005	201.0205 Grubbing	336.000 STA	.		.	
0006	201.0220 Grubbing	528.000 ID	.		.	
0007	203.0200 Removing Old Structure (station) 0001. 591WS+30	LUMP	LUMP		.	
0008	203.0200 Removing Old Structure (station) 0002. 175HA+52.38	LUMP	LUMP		.	
0009	203.0200 Removing Old Structure (station) 0003. 285NS+50	LUMP	LUMP		.	
0010	203.0200 Removing Old Structure (station) 0004. 600ES+80	LUMP	LUMP		.	

CONTRACT: 20150929001

PROJECT(S): 1060-33-81, 1060-34-82, 1060-43-81

FEDERAL ID(S): WISC 2015473, N/A, WISC 2015474

CONTRACTOR :_____

LINE NO	ITEM DESCRIPTION	APPROX. QUANTITY AND UNITS	UNIT PRICE DOLLARS	UNIT PRICE CTS	BID AMOUNT DOLLARS	BID AMOUNT CTS
0011	203.0200 Removing Old Structure (station) 0005. 589ES+60	LUMP	LUMP			.
0012	203.0200 Removing Old Structure (station) 0006. 296NS+00	LUMP	LUMP			.
0013	203.0200 Removing Old Structure (station) 0007. 128EW+41	LUMP	LUMP			.
0014	203.0200 Removing Old Structure (station) 0008. 127EW+00	LUMP	LUMP			.
0015	203.0200 Removing Old Structure (station) 0009. 112EW+25	LUMP	LUMP			.
0016	203.0200 Removing Old Structure (station) 0010. 112EW+24	LUMP	LUMP			.
0017	203.0200 Removing Old Structure (station) 0011. 229NS+80	LUMP	LUMP			.
0018	203.0200 Removing Old Structure (station) 0012. 229NS+90	LUMP	LUMP			.
0019	203.0200 Removing Old Structure (station) 0015. 592SE+50	LUMP	LUMP			.
0020	203.0200 Removing Old Structure (station) 0016. 545NE+50	LUMP	LUMP			.

CONTRACT: 20150929001

PROJECT(S): 1060-33-81, 1060-34-82, 1060-43-81

FEDERAL ID(S): WISC 2015473, N/A, WISC 2015474

CONTRACTOR :_____

LINE NO	ITEM DESCRIPTION	APPROX. QUANTITY AND UNITS	UNIT PRICE DOLLARS	UNIT PRICE CTS	BID AMOUNT DOLLARS	BID AMOUNT CTS
0021	203.0200 Removing Old Structure (station) 0017. 591ES+22	LUMP	LUMP			.
0022	203.0200 Removing Old Structure (station) 0018. 596ES+71	LUMP	LUMP			.
0023	203.0200 Removing Old Structure (station) 0019. 786GE+00	LUMP	LUMP			.
0024	203.0200 Removing Old Structure (station) 0020. 16+00	LUMP	LUMP			.
0025	203.0200 Removing Old Structure (station) 0021. 236NS+00	LUMP	LUMP			.
0026	203.0200 Removing Old Structure (station) 0022. 252NS+65	LUMP	LUMP			.
0027	203.0200 Removing Old Structure (station) 0023. 253NS+50	LUMP	LUMP			.
0029	203.0200 Removing Old Structure (station) 0025. 155EW+50	LUMP	LUMP			.
0030	203.0200 Removing Old Structure (station) 0026. 159EW+00	LUMP	LUMP			.
0031	203.0200 Removing Old Structure (station) 0027. 556NE+00	LUMP	LUMP			.

CONTRACT: 20150929001

PROJECT(S): 1060-33-81, 1060-34-82, 1060-43-81

FEDERAL ID(S): WISC 2015473, N/A, WISC 2015474

CONTRACTOR :_____

LINE NO	ITEM DESCRIPTION	APPROX. QUANTITY AND UNITS	UNIT PRICE DOLLARS	UNIT PRICE CTS	BID AMOUNT DOLLARS	BID AMOUNT CTS
0032	203.0200 Removing Old Structure (station) 0028. 734BA+50	LUMP	LUMP			.
0033	203.0200 Removing Old Structure (station) 0029. 345NS+00	LUMP	LUMP			.
0034	203.0210.S Abatement of Asbestos Containing Material (structure) 0001. B-40-101	LUMP	LUMP			.
0035	203.0210.S Abatement of Asbestos Containing Material (structure) 0002. B-40-0112	LUMP	LUMP			.
0036	203.0210.S Abatement of Asbestos Containing Material (structure) 0003. B-40-0126	LUMP	LUMP			.
0037	203.0210.S Abatement of Asbestos Containing Material (structure) 0004. B-40-0127	LUMP	LUMP			.
0038	203.0210.S Abatement of Asbestos Containing Material (structure) 0005. B-40-0143	LUMP	LUMP			.
0039	203.0210.S Abatement of Asbestos Containing Material (structure) 0006. B-40-0144	LUMP	LUMP			.

CONTRACT: 20150929001

PROJECT(S): 1060-33-81, 1060-34-82, 1060-43-81

FEDERAL ID(S): WISC 2015473, N/A, WISC 2015474

CONTRACTOR :_____

LINE NO	ITEM DESCRIPTION	APPROX. QUANTITY AND UNITS	UNIT PRICE DOLLARS	UNIT PRICE CTS	BID AMOUNT DOLLARS	BID AMOUNT CTS
0162	505.0909 Bar Couplers No. 9	44.000 EACH	.		.	
0163	505.0910 Bar Couplers No. 10	52.000 EACH	.		.	
0164	506.0605 Structural Steel HS **P**	20,031,692 LB	.		.	
0165	506.2605 Bearing Pads Elastomeric Non-Laminated **P**	526.000 EACH	.		.	
0166	506.2610 Bearing Pads Elastomeric Laminated **P**	116.000 EACH	.		.	
0167	506.3010 Welded Stud Shear Connectors 7/8x5-Inch **P**	3,768.000 EACH	.		.	
0168	506.3015 Welded Stud Shear Connectors 7/8x6-Inch **P**	57,888.000 EACH	.		.	
0169	506.3020 Welded Stud Shear Connectors 7/8x7-Inch **P**	20,650.000 EACH	.		.	
0170	506.3025 Welded Stud Shear Connectors 7/8x8-Inch **P**	30,186.000 EACH	.		.	
0171	506.3030 Welded Stud Shear Connectors 7/8x9-Inch **P**	15,180.000 EACH	.		.	

CONTRACT: 20150929001

PROJECT(S): 1060-33-81, 1060-34-82, 1060-43-81

FEDERAL ID(S): WISC 2015473, N/A, WISC 2015474

CONTRACTOR :_____

LINE NO	ITEM DESCRIPTION	APPROX. QUANTITY AND UNITS	UNIT PRICE DOLLARS	UNIT PRICE CTS	BID AMOUNT DOLLARS	BID AMOUNT CTS
0202	511.1200 Temporary Shoring (structure) 0016. B-40-851	1,890.000 SF	.		.	
0203	511.1200 Temporary Shoring (structure) 0017. B-40-873	200.000 SF	.		.	
0204	511.1200 Temporary Shoring (structure) 0018. B-40-874	3,800.000 SF	.		.	
0205	511.1200 Temporary Shoring (structure) 0019. R-40-630	1,825.000 SF	.		.	
0206	511.1200 Temporary Shoring (structure) 0020. R-40-524	640.000 SF	.		.	
0207	511.1200 Temporary Shoring (structure) 0021. R-40-467	1,425.000 SF	.		.	
0208	511.1200 Temporary Shoring (structure) 0022. R-40-468	440.000 SF	.		.	
0209	511.1200 Temporary Shoring (structure) 0023. R-40-522	1,340.000 SF	.		.	
0210	511.1300 Temporary Shoring (location) 0001. 217NS+00 To 228NS+57	4,921.000 SF	.		.	
0211	511.1300 Temporary Shoring (location) 0002. 275NS+26 To 275NS+51	330.000 SF	.		.	

CONTRACT: 20150929001

PROJECT(S): 1060-33-81, 1060-34-82, 1060-43-81

FEDERAL ID(S): WISC 2015473, N/A, WISC 2015474

CONTRACTOR :_____

LINE NO	ITEM DESCRIPTION	APPROX. QUANTITY AND UNITS	UNIT PRICE DOLLARS	UNIT PRICE CTS	BID AMOUNT DOLLARS	BID AMOUNT CTS
0425	550.1100 Piling Steel HP 10-Inch X 42 Lb	2,200.000 LF	.		.	
0426	550.1120 Piling Steel HP 12-Inch X 53 Lb	5,710.000 LF	.		.	
0427	550.1140 Piling Steel HP 14-Inch X 73 Lb	29,715.000 LF	.		.	
0428	550.2146 Piling CIP Concrete 14 X 0.375-Inch	8,228.000 LF	.		.	
0429	550.2166 Piling CIP Concrete 16 X 0.375-Inch	4,770.000 LF	.		.	
0430	550.2168 Piling CIP Concrete 16 X 0.50-Inch	15,525.000 LF	.		.	
0431	601.0331 Concrete Curb & Gutter 31-Inch **P**	12,328.000 LF	.		.	
0432	601.0551 Concrete Curb & Gutter 4-Inch Sloped 36-Inch Type A **P**	4,951.000 LF	.		.	
0433	601.0553 Concrete Curb & Gutter 4-Inch Sloped 36-Inch Type D **P**	454.000 LF	.		.	
0434	601.0555 Concrete Curb & Gutter 6-Inch Sloped 36-Inch Type A **P**	113.000 LF	.		.	

CONTRACT: 20150929001

PROJECT(S): 1060-33-81, 1060-34-82, 1060-43-81

FEDERAL ID(S): WISC 2015473, N/A, WISC 2015474

CONTRACTOR :_____

LINE NO	ITEM DESCRIPTION	APPROX. QUANTITY AND UNITS	UNIT PRICE DOLLARS	UNIT PRICE CTS	BID AMOUNT DOLLARS	BID AMOUNT CTS
0993	SPV.0060 Special 3101. Install Traffic Cabinet Base	1.000 EACH	.		.	
0994	SPV.0060 Special 3102. Install Traffic Signal Base	11.000 EACH	.		.	
0995	SPV.0060 Special 3103. Traffic Polymer Concrete Vault 13-In X 24-In X 18-In	6.000 EACH	.		.	
0996	SPV.0060 Special 3104. Traffic Polymer Concrete Vault 17-In X 30-In X 18-In	5.000 EACH	.		.	
0997	SPV.0060 Special 4100. Anchor Assemblies Sign Bridge Structures	8.000 EACH	.		.	
0998	SPV.0060 Special 4105. Anchor Assemblies Noise Barrier Structures	696.000 EACH	.		.	
0999	SPV.0060 Special 4110. Pile Dynamic Analyzer (PDA) Testing	95.000 EACH	.		.	
1000	SPV.0060 Special 4115. Pile Dynamic Analyzer (PDA) Restrikes	97.000 EACH	.		.	
1001	SPV.0060 Special 4116. Case Pile Wave Analysis Program (Cap/Wap) Evaluation	55.000 EACH	.		.	

CONTRACT: 20150929001

PROJECT(S): 1060-33-81, 1060-34-82, 1060-43-81

FEDERAL ID(S): WISC 2015473, N/A, WISC 2015474

CONTRACTOR :_____

LINE NO	ITEM DESCRIPTION	APPROX. QUANTITY AND UNITS		UNIT PRICE DOLLARS	CTS	BID AMOUNT DOLLARS	CTS
1210	SPV.0195 Special 0120. HMA Longitudinal Joint Repair	40.000	TON	.		.	
1211	SPV.0195 Special 0700. Management Of Solid Waste	3,097.000	TON	.		.	
1212	SPV.0195 Special 0801. Soil Drying Agent	20,300.000	TON	.		.	
1334	630.0171 Seeding Mixture No. 70A	439.000	LB	.		.	
1335	550.2148 Piling CIP Concrete 14 X 0.50-Inch	1,395.000	LF	.		.	
1336	SPV.0105 Special 0050. Partially Removing Existing Drilled Shafts	LUMP	LUMP			.	
	SECTION 0001 TOTAL					.	

SECTION 0002 B-40-786 (Option A)
ALT GROUP AA1

1213	206.1000 Excavation for Structures Bridges (structure) 0001. B-40-786	LUMP	LUMP			.	
1214	209.0100 Backfill Granular	24.000	CY	.		.	

CONTRACT:	PROJECT(S):	FEDERAL ID(S):
20150929001	1060-33-81	WISC 2015473
	1060-34-82	N/A
	1060-43-81	WISC 2015474

CONTRACTOR :_____

LINE NO	ITEM DESCRIPTION	APPROX. QUANTITY AND UNITS	UNIT PRICE DOLLARS	UNIT PRICE CTS	BID AMOUNT DOLLARS	BID AMOUNT CTS
1215	502.0100 Concrete Masonry Bridges **P**	812.000 CY	.		.	
1216	505.0405 Bar Steel Reinforcement HS Bridges	260,690.000 LB	.		.	
1217	505.0605 Bar Steel Reinforcement HS Coated Bridges	190,360.000 LB	.		.	
1218	SPV.0060 Special 4150. Drilled Foundation Shaft Base Grouting	7.000 EACH	.		.	
1219	SPV.0060 Special 4160. Tip Testing Drilled Foundation Shaft 98. 43-Inch	7.000 EACH	.		.	
1220	SPV.0075 Special 4200. Obstructions Drilled Foundation Shaft	28.000 HRS	.		.	
1221	SPV.0090 Special 4435. Drilled Foundation Shaft 98.43-Inch	523.000 LF	.		.	
	SECTION 0002 TOTAL				.	

SECTION 0003 B-40-786 (Option B)
ALT GROUP AA2

1222	206.1000 Excavation for Structures Bridges (structure) 0001. B-40-786	LUMP	LUMP		.	

CONTRACT: 20150929001

PROJECT(S): 1060-33-81, 1060-34-82, 1060-43-81

FEDERAL ID(S): WISC 2015473, N/A, WISC 2015474

CONTRACTOR :_____

LINE NO	ITEM DESCRIPTION	APPROX. QUANTITY AND UNITS		UNIT PRICE DOLLARS	UNIT PRICE CTS	BID AMOUNT DOLLARS	BID AMOUNT CTS
1223	209.0100 Backfill Granular	62.000	CY	.		.	
1224	502.0100 Concrete Masonry Bridges **P**	1,211.000	CY	.		.	
1225	505.0405 Bar Steel Reinforcement HS Bridges	213,150.000	LB	.		.	
1226	505.0605 Bar Steel Reinforcement HS Coated Bridges	208,610.000	LB	.		.	
1227	511.1200 Temporary Shoring (structure) 0001. B-40-786	675.000	SF	.		.	
1228	550.2168 Piling CIP Concrete 16 X 0.50-Inch	5,580.000	LF	.		.	
1229	SPV.0060 Special 4110. Pile Dynamic Analyzer (PDA) Testing	6.000	EACH	.		.	
1230	SPV.0060 Special 4115. Pile Dynamic Analyzer (PDA) Restrikes	6.000	EACH	.		.	
1231	SPV.0060 Special 4116. Case Pile Wave Analysis Program (Cap/Wap) Evaluation	3.000	EACH	.		.	
1232	SPV.0060 Special 4150. Drilled Foundation Shaft Base Grouting	4.000	EACH	.		.	

CONTRACT: 20150929001

PROJECT(S): 1060-33-81, 1060-34-82, 1060-43-81

FEDERAL ID(S): WISC 2015473, N/A, WISC 2015474

CONTRACTOR :_____

LINE NO	ITEM DESCRIPTION	APPROX. QUANTITY AND UNITS	UNIT PRICE DOLLARS	UNIT PRICE CTS	BID AMOUNT DOLLARS	BID AMOUNT CTS
1233	SPV.0060 Special 4160. Tip Testing Drilled Foundation Shaft 98. 43-Inch	4.000 EACH		.		.
1234	SPV.0075 Special 4200. Obstructions Drilled Foundation Shaft	16.000 HRS		.		.
1235	SPV.0090 Special 4435. Drilled Foundation Shaft 98.43-Inch	311.000 LF		.		.
	SECTION 0003 TOTAL					.

SECTION 0004 B-40-853 (Option A)
ALT GROUP BB1

1236	206.1000 Excavation for Structures Bridges (structure) 0009. B-40-853	LUMP	LUMP			.
1237	209.0100 Backfill Granular	40.000 CY		.		.
1238	502.0100 Concrete Masonry Bridges **P**	428.000 CY		.		.
1239	505.0405 Bar Steel Reinforcement HS Bridges	137,850.000 LB		.		.
1240	505.0605 Bar Steel Reinforcement HS Coated Bridges	100,380.000 LB		.		.

CONTRACT: 20150929001

PROJECT(S): 1060-33-81, 1060-34-82, 1060-43-81

FEDERAL ID(S): WISC 2015473, N/A, WISC 2015474

CONTRACTOR :_____

LINE NO	ITEM DESCRIPTION	APPROX. QUANTITY AND UNITS	UNIT PRICE DOLLARS	UNIT PRICE CTS	BID AMOUNT DOLLARS	BID AMOUNT CTS
1241	505.0911 Bar Couplers No. 11	96.000 EACH	.		.	
1242	511.1200 Temporary Shoring (structure) 0011. B-40-853	2,740.000 SF	.		.	
1243	SPV.0060 Special 4150. Drilled Foundation Shaft Base Grouting	5.000 EACH	.		.	
1244	SPV.0060 Special 4160. Tip Testing Drilled Foundation Shaft 98. 43-Inch	5.000 EACH	.		.	
1245	SPV.0075 Special 4200. Obstructions Drilled Foundation Shaft	20.000 HRS	.		.	
1246	SPV.0090 Special 4435. Drilled Foundation Shaft 98.43-Inch	298.000 LF	.		.	
	SECTION 0004 TOTAL				.	

SECTION 0005 B-40-853 (Option B)
ALT GROUP BB2

1247	206.1000 Excavation for Structures Bridges (structure) 0009. B-40-853	LUMP	LUMP		.	
1248	209.0100 Backfill Granular	40.000 CY	.		.	

CONTRACT: 20150929001

PROJECT(S): 1060-33-81, 1060-34-82, 1060-43-81

FEDERAL ID(S): WISC 2015473, N/A, WISC 2015474

CONTRACTOR :_____

LINE NO	ITEM DESCRIPTION	APPROX. QUANTITY AND UNITS	UNIT PRICE DOLLARS	UNIT PRICE CTS	BID AMOUNT DOLLARS	BID AMOUNT CTS
1249	502.0100 Concrete Masonry Bridges **P**	559.000 CY	.		.	
1250	505.0405 Bar Steel Reinforcement HS Bridges	129,440.000 LB	.		.	
1251	505.0605 Bar Steel Reinforcement HS Coated Bridges	102,550.000 LB	.		.	
1252	505.0911 Bar Couplers No. 11	96.000 EACH	.		.	
1253	511.1200 Temporary Shoring (structure) 0011. B-40-853	2,740.000 SF	.		.	
1254	550.2168 Piling CIP Concrete 16 X 0.50-Inch	1,650.000 LF	.		.	
1255	SPV.0060 Special 4110. Pile Dynamic Analyzer (PDA) Testing	2.000 EACH	.		.	
1256	SPV.0060 Special 4115. Pile Dynamic Analyzer (PDA) Restrikes	2.000 EACH	.		.	
1257	SPV.0060 Special 4116. Case Pile Wave Analysis Program (Cap/Wap) Evaluation	1.000 EACH	.		.	
1258	SPV.0060 Special 4150. Drilled Foundation Shaft Base Grouting	4.000 EACH	.		.	

CONTRACT: 20150929001

PROJECT(S): 1060-33-81, 1060-34-82, 1060-43-81

FEDERAL ID(S): WISC 2015473, N/A, WISC 2015474

CONTRACTOR :_____

LINE NO	ITEM DESCRIPTION	APPROX. QUANTITY AND UNITS	UNIT PRICE DOLLARS	UNIT PRICE CTS	BID AMOUNT DOLLARS	BID AMOUNT CTS
1259	SPV.0060 Special 4160. Tip Testing Drilled Foundation Shaft 98. 43-Inch	4.000 EACH		.		.
1260	SPV.0075 Special 4200. Obstructions Drilled Foundation Shaft	16.000 HRS		.		.
1261	SPV.0090 Special 4435. Drilled Foundation Shaft 98.43-Inch	236.500 LF		.		.
	SECTION 0005 TOTAL					.

SECTION 0006 B-40-854 (Option A)
ALT GROUP CC1

1262	206.1000 Excavation for Structures Bridges (structure) 0010. B-40-854	LUMP	LUMP			.
1263	209.0100 Backfill Granular	250.000 CY		.		.
1264	502.0100 Concrete Masonry Bridges **P**	2,771.000 CY		.		.
1265	505.0405 Bar Steel Reinforcement HS Bridges	435,860.000 LB		.		.
1266	505.0605 Bar Steel Reinforcement HS Coated Bridges	755,100.000 LB		.		.

CONTRACT: 20150929001

PROJECT(S): 1060-33-81, 1060-34-82, 1060-43-81

FEDERAL ID(S): WISC 2015473, N/A, WISC 2015474

CONTRACTOR :_____

LINE NO	ITEM DESCRIPTION	APPROX. QUANTITY AND UNITS	UNIT PRICE DOLLARS	UNIT PRICE CTS	BID AMOUNT DOLLARS	BID AMOUNT CTS
1267	505.0800.S Bar Steel Reinforcement HS Stainless Structures	1,430.000 LB	.		.	
1268	505.0911 Bar Couplers No. 11	144.000 EACH	.		.	
1269	511.1200 Temporary Shoring (structure) 0012. B-40-854	3,240.000 SF	.		.	
1270	612.0106 Pipe Underdrain 6-Inch	40.000 LF	.		.	
1271	612.0206 Pipe Underdrain Unperforated 6-Inch	40.000 LF	.		.	
1272	645.0111 Geotextile Fabric Type DF Schedule A	33.000 SY	.		.	
1273	SPV.0060 Special 4150. Drilled Foundation Shaft Base Grouting	14.000 EACH	.		.	
1274	SPV.0060 Special 4160. Tip Testing Drilled Foundation Shaft 98. 43-Inch	5.000 EACH	.		.	
1275	SPV.0060 Special 4162. Tip Testing Drilled Foundation Shaft 118. 11-Inch	9.000 EACH	.		.	
1276	SPV.0060 Special 4181. Bar Couplers No. 18	210.000 EACH	.		.	

CONTRACT: 20150929001

PROJECT(S): 1060-33-81, 1060-34-82, 1060-43-81

FEDERAL ID(S): WISC 2015473, N/A, WISC 2015474

CONTRACTOR :_____

LINE NO	ITEM DESCRIPTION	APPROX. QUANTITY AND UNITS	UNIT PRICE DOLLARS	UNIT PRICE CTS	BID AMOUNT DOLLARS	BID AMOUNT CTS
1277	SPV.0075 Special 4200. Obstructions Drilled Foundation Shaft	56.000 HRS	.		.	
1278	SPV.0090 Special 4435. Drilled Foundation Shaft 98.43-Inch	364.000 LF	.		.	
1279	SPV.0090 Special 4440. Drilled Foundation Shaft 118.11-Inch	525.000 LF	.		.	
1280	SPV.0105 Special 4520. Trial Drilled Foundation Shaft 118.11-Inch	LUMP	LUMP		.	
	SECTION 0006 TOTAL				.	

SECTION 0007 B-40-854 (Option B)
ALT GROUP CC2

1281	206.1000 Excavation for Structures Bridges (structure) 0010. B-40-854	LUMP	LUMP		.	
1282	209.0100 Backfill Granular	2,190.000 CY	.		.	
1283	502.0100 Concrete Masonry Bridges **P**	3,938.000 CY	.		.	
1284	505.0405 Bar Steel Reinforcement HS Bridges	377,110.000 LB	.		.	

CONTRACT: 20150929001

PROJECT(S): 1060-33-81, 1060-34-82, 1060-43-81

FEDERAL ID(S): WISC 2015473, N/A, WISC 2015474

CONTRACTOR :_____

LINE NO	ITEM DESCRIPTION	APPROX. QUANTITY AND UNITS	UNIT PRICE DOLLARS	UNIT PRICE CTS	BID AMOUNT DOLLARS	BID AMOUNT CTS
1285	505.0605 Bar Steel Reinforcement HS Coated Bridges	720,240.000 LB	.		.	
1286	505.0800.S Bar Steel Reinforcement HS Stainless Structures	1,430.000 LB	.		.	
1287	505.0911 Bar Couplers No. 11	96.000 EACH	.		.	
1288	511.1200 Temporary Shoring (structure) 0012. B-40-854	3,240.000 SF	.		.	
1289	550.2168 Piling CIP Concrete 16 X 0.50-Inch	14,870.000 LF	.		.	
1290	612.0106 Pipe Underdrain 6-Inch	40.000 LF	.		.	
1291	612.0206 Pipe Underdrain Unperforated 6-Inch	40.000 LF	.		.	
1292	645.0111 Geotextile Fabric Type DF Schedule A	33.000 SY	.		.	
1293	SPV.0060 Special 4110. Pile Dynamic Analyzer (PDA) Testing	16.000 EACH	.		.	
1294	SPV.0060 Special 4115. Pile Dynamic Analyzer (PDA) Restrikes	16.000 EACH	.		.	

CONTRACT: 20150929001

PROJECT(S): 1060-33-81, 1060-34-82, 1060-43-81

FEDERAL ID(S): WISC 2015473, N/A, WISC 2015474

CONTRACTOR :_____

LINE NO	ITEM DESCRIPTION	APPROX. QUANTITY AND UNITS	UNIT PRICE DOLLARS	UNIT PRICE CTS	BID AMOUNT DOLLARS	BID AMOUNT CTS
1295	SPV.0060 Special 4116. Case Pile Wave Analysis Program (Cap/Wap) Evaluation	8.000 EACH		.		.
1296	SPV.0060 Special 4150. Drilled Foundation Shaft Base Grouting	6.000 EACH		.		.
1297	SPV.0060 Special 4160. Tip Testing Drilled Foundation Shaft 98. 43-Inch	2.000 EACH		.		.
1298	SPV.0060 Special 4162. Tip Testing Drilled Foundation Shaft 118. 11-Inch	4.000 EACH		.		.
1299	SPV.0060 Special 4181. Bar Couplers No. 18	70.000 EACH		.		.
1300	SPV.0075 Special 4200. Obstructions Drilled Foundation Shaft	24.000 HRS		.		.
1301	SPV.0090 Special 4435. Drilled Foundation Shaft 98.43-Inch	207.000 LF		.		.
1302	SPV.0090 Special 4440. Drilled Foundation Shaft 118.11-Inch	227.000 LF		.		.
1303	SPV.0105 Special 4520. Trial Drilled Foundation Shaft 118.11-Inch	LUMP	LUMP			.
	SECTION 0007 TOTAL					.

SECTION 0008 B-40-856 (Option A)
ALT GROUP DD1

CONTRACT: 20150929001

PROJECT(S): 1060-33-81, 1060-34-82, 1060-43-81

FEDERAL ID(S): WISC 2015473, N/A, WISC 2015474

CONTRACTOR :_____

LINE NO	ITEM DESCRIPTION	APPROX. QUANTITY AND UNITS	UNIT PRICE DOLLARS	UNIT PRICE CTS	BID AMOUNT DOLLARS	BID AMOUNT CTS
1304	206.1000 Excavation for Structures Bridges (structure) 0011. B-40-856	LUMP	LUMP			.
1305	209.0100 Backfill Granular	73.000 CY		.		.
1306	502.0100 Concrete Masonry Bridges **P**	2,828.000 CY		.		.
1307	505.0405 Bar Steel Reinforcement HS Bridges	325,210.000 LB		.		.
1308	505.0605 Bar Steel Reinforcement HS Coated Bridges	675,740.000 LB		.		.
1309	511.1200 Temporary Shoring (structure) 0003. B-40-856	2,445.000 SF		.		.
1310	SPV.0060 Special 4150. Drilled Foundation Shaft Base Grouting	12.000 EACH		.		.
1311	SPV.0060 Special 4160. Tip Testing Drilled Foundation Shaft 98. 43-Inch	2.000 EACH		.		.
1312	SPV.0060 Special 4162. Tip Testing Drilled Foundation Shaft 118. 11-Inch	10.000 EACH		.		.
1313	SPV.0060 Special 4181. Bar Couplers No. 18	150.000 EACH		.		.

CONTRACT: 20150929001

PROJECT(S): 1060-33-81, 1060-34-82, 1060-43-81

FEDERAL ID(S): WISC 2015473, N/A, WISC 2015474

CONTRACTOR :_____

LINE NO	ITEM DESCRIPTION	APPROX. QUANTITY AND UNITS		UNIT PRICE DOLLARS	CTS	BID AMOUNT DOLLARS	CTS
1314	SPV.0075 Special 4200. Obstructions Drilled Foundation Shaft	48.000	HRS	.		.	
1315	SPV.0090 Special 4435. Drilled Foundation Shaft 98.43-Inch	115.000	LF	.		.	
1316	SPV.0090 Special 4440. Drilled Foundation Shaft 118.11-Inch	598.000	LF	.		.	
	SECTION 0008 TOTAL					.	

SECTION 0009 B-40-856 (Option B)
ALT GROUP DD2

1317	206.1000 Excavation for Structures Bridges (structure) 0011. B-40-856	LUMP	LUMP			.	
1318	209.0100 Backfill Granular	133.000	CY	.		.	
1319	502.0100 Concrete Masonry Bridges **P**	3,502.000	CY	.		.	
1320	505.0405 Bar Steel Reinforcement HS Bridges	319,380.000	LB	.		.	
1321	505.0605 Bar Steel Reinforcement HS Coated Bridges	649,700.000	LB	.		.	

CONTRACT: 20150929001

PROJECT(S): 1060-33-81, 1060-34-82, 1060-43-81

FEDERAL ID(S): WISC 2015473, N/A, WISC 2015474

CONTRACTOR :_____

LINE NO	ITEM DESCRIPTION	APPROX. QUANTITY AND UNITS	UNIT PRICE DOLLARS	UNIT PRICE CTS	BID AMOUNT DOLLARS	BID AMOUNT CTS
1322	511.1200 Temporary Shoring (structure) 0003. B-40-856	2,445.000 SF	.		.	
1323	550.2168 Piling CIP Concrete 16 X 0.50-Inch	7,980.000 LF	.		.	
1324	SPV.0060 Special 4110. Pile Dynamic Analyzer (PDA) Testing	10.000 EACH	.		.	
1325	SPV.0060 Special 4115. Pile Dynamic Analyzer (PDA) Restrikes	10.000 EACH	.		.	
1326	SPV.0060 Special 4116. Case Pile Wave Analysis Program (Cap/Wap) Evaluation	5.000 EACH	.		.	
1327	SPV.0060 Special 4150. Drilled Foundation Shaft Base Grouting	7.000 EACH	.		.	
1328	SPV.0060 Special 4160. Tip Testing Drilled Foundation Shaft 98. 43-Inch	1.000 EACH	.		.	
1329	SPV.0060 Special 4162. Tip Testing Drilled Foundation Shaft 118. 11-Inch	6.000 EACH	.		.	
1330	SPV.0060 Special 4181. Bar Couplers No. 18	90.000 EACH	.		.	

CONTRACT:	PROJECT(S):	FEDERAL ID(S):
20150929001	1060-33-81	WISC 2015473
	1060-34-82	N/A
	1060-43-81	WISC 2015474

CONTRACTOR :_____

LINE NO	ITEM DESCRIPTION	APPROX. QUANTITY AND UNITS	UNIT PRICE DOLLARS	UNIT PRICE CTS	BID AMOUNT DOLLARS	BID AMOUNT CTS
1331	SPV.0075 Special 4200. Obstructions Drilled Foundation Shaft	28.000 HRS	.		.	
1332	SPV.0090 Special 4435. Drilled Foundation Shaft 98.43-Inch	65.000 LF	.		.	
1333	SPV.0090 Special 4440. Drilled Foundation Shaft 118.11-Inch	355.000 LF	.		.	
	SECTION 0009 TOTAL				.	
	TOTAL BID				.	