Example Problem 1 –West side of Structure[1]

See Figure D for plan view; see Figure E for cross-section views of stations 2+00 and 3+00.

Given:

- AADT= 3500 (Always use larger of design or existing AADT)
- Design Speed = 45 MPH
- At station 4+00 and beyond: side slopes within the clear zone are recoverable; ditch within the clear zone is traversable
- Station 3+00 to 4+00: there is not a clear runout area beyond the toe of traversable but non-recoverable slope
- L_C = Clear Zone = 26' (from FDM 11-15-1, Attachment 10)
- L_R = 135' (from Table 1)
- L_2 = shoulder width = 6'

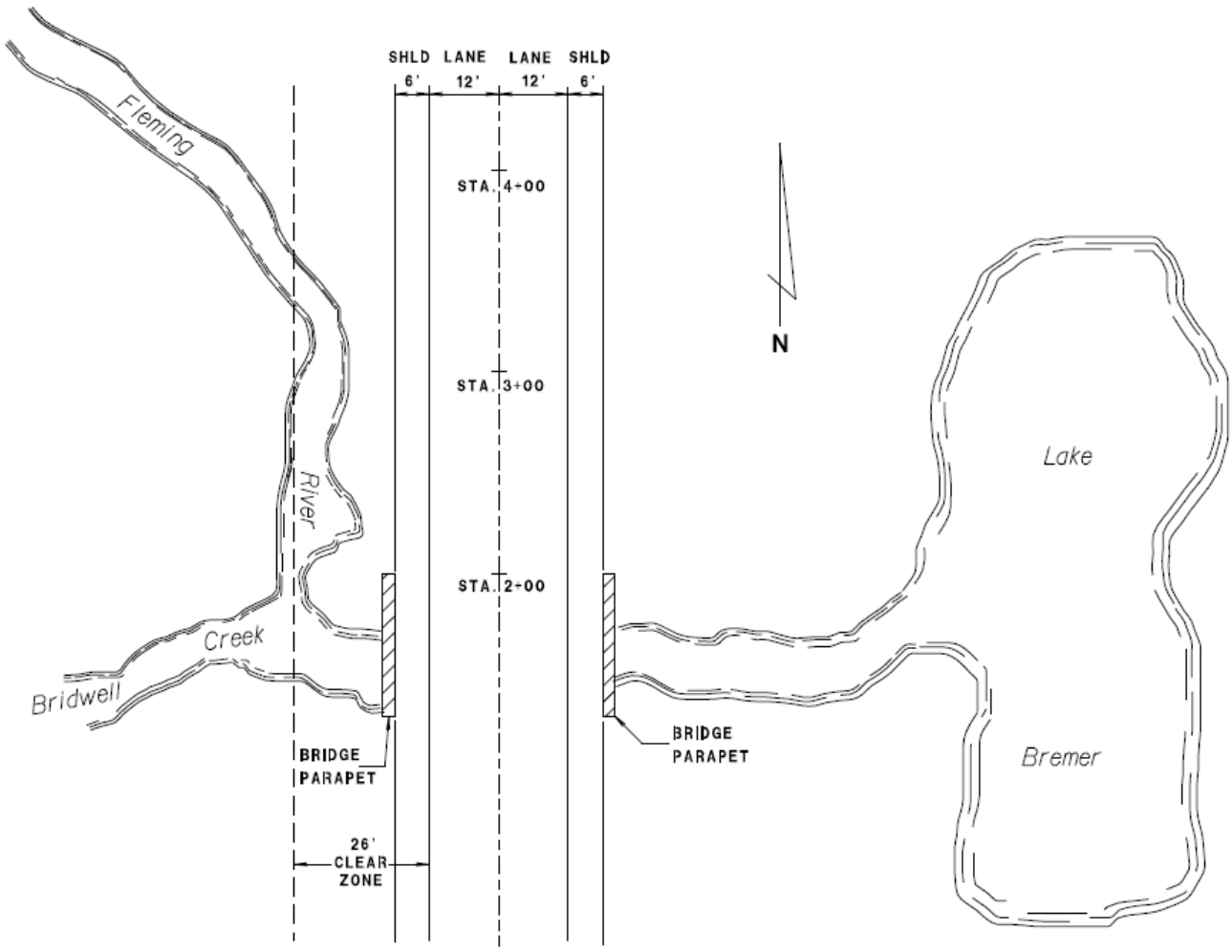

Figure D Example 1 Plan View

[1] FDM is only providing examples for one side of the roadway. Other side would also need to have calculations performed.

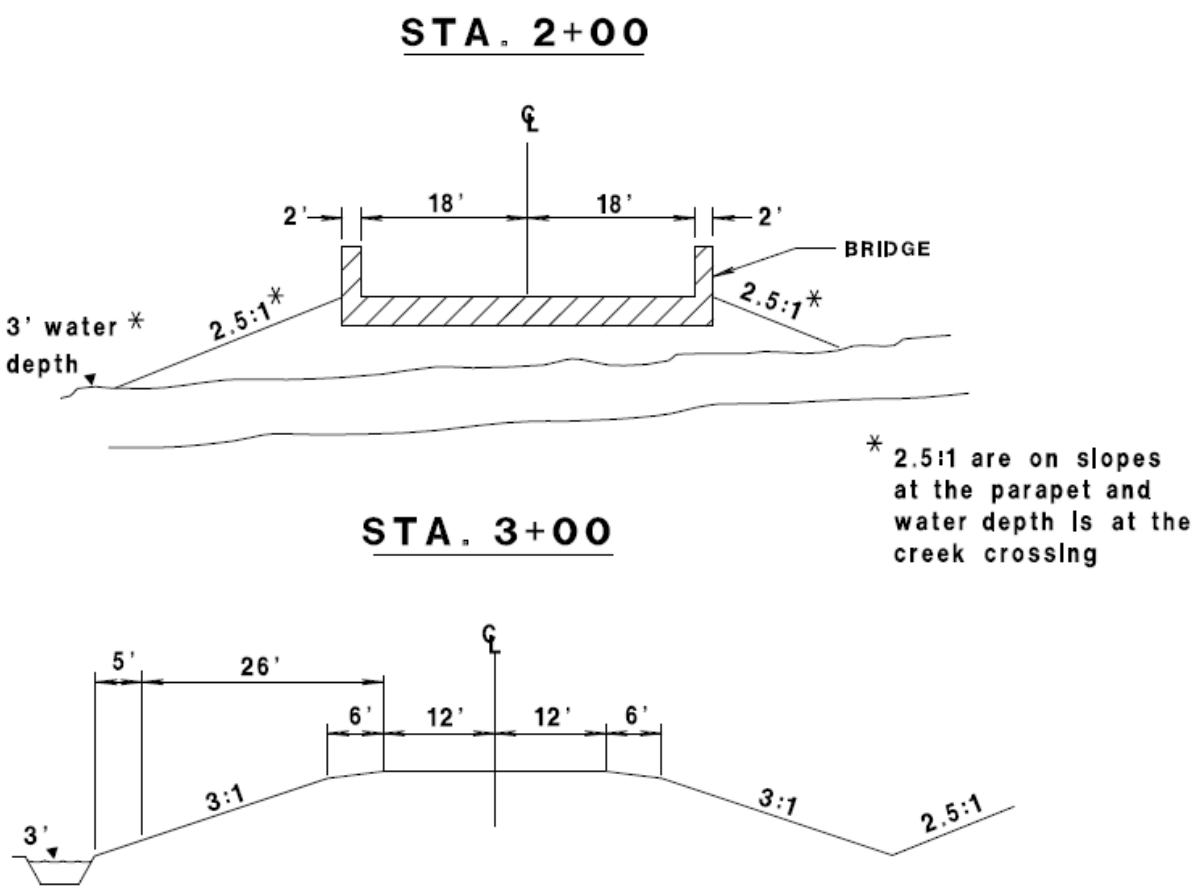

Figure E Example 1 Cross Section Views

Find:

1. Determine which hazards need to be shielded.
2. Calculate the LON for installation using equation 1.
3. Calculate the length of barrier from end of terminal to hazard that is needed to provide calculated LON.
4. Verify that the calculated length of barrier is greater than or equal to the minimum required length from end of terminal to hazard
5. Verify that there is adequate space for the required grading at the EAT terminal

Example 1 Part 1 Solution: Near-side Approach (Northwest Quadrant)

Hazards that need to be shielded:

- The north end of the west-side bridge parapet;
- Water within the clear zone that is deeper than 2'; and
- Traversable side slopes within the clear zone for which there is not a clear runout area and critical side slopes within the clear zone.

Calculate the length of beam guard needed to shield north end of the west-side bridge parapet

L_A = shoulder width + parapet width = 6' + 2' = 8'; L_R and L_2 are as given on the previous page.

$$X=\frac{(L_A-L_2)}{L_A/L_R}=\frac{(8-6)}{8/135}=33.75'$$

Note:

The calculated LON in this example is less than the minimum installation standard length for EAT and thrie beam structure approach (e.g. length of MGS EAT and MGS thrie beam transition is approximately 93').

However, there are other hazards at this location that need shielding: (e.g. the water has a depth of 2' or more within the clear zone, and the side slopes near the structure are non-traversable). Therefore, the length of need is calculated using full clear zone width (i.e., L_A=L_C).

Calculate the length of beam guard needed to shield the water within the clear zone that is deeper than 2-ft. This hazard extends from station 2+00 to station 4+00 because there is no clear recovery area between these stations. Therefore the edge of clear zone at station 4+00 becomes the end of hazard that should be shielded. The length of need is calculated using full clear zone width (i.e., L_A=L_C=26')

$$X=\frac{(L_A\text{-}L_2)}{L_A/L_R}=\frac{(26-6)}{26/135}=103.8'\cong 104'$$

The LON equation places the "end point of barrier need" 104 feet upstream of station 4+00 (i.e. station 5+04). This represents the station of EAT post no. 3. EAT post no. 1 is at station 5+16.5, which is 116.5-feet from the hazard. The beam guard needs to shield the entire length of the hazard starting at station 2+00. Station 5+16.5 is a suitable location to install the EAT.

Example 1 Part 2 Solution: Departure Side (Southwest Quadrant)

Given:

AADT= 3500

Design Speed = 45 MPH

Clear Zone= 26' (See 11-15-1)

L_R= 135' (See Table 1)

Find:

Compute LON using LON equation

Verify that the required grading, minimum lengths for barrier system and terminals can be provided at the calculated location

Solution:

L_A=12' (lane width) +6' (shoulder width)+2'(2 parapet)=20' (However, use full clear zone 26'. See above discussion about water being a hazard)

L_2=12' (lane width)+6' (shoulder width)=18'

$$X=\frac{(L_A\text{-}L_2)}{L_A/L_R}=\frac{(26-18)}{26/135}=41.5'$$

The 41.5' length of the departure end of the bridge is a minimum length of barrier from the length of need equation. If there were other hazards (water, non-recoverable slopes, non-traversable slopes) the length of beam guard on the departure end would need to be extended, or other roadside design methods would need to be deployed (e.g. remove, make traversable…).

In this example (i.e. two-way traffic), the minimum installation length would be the length of EAT plus thrie beam structure approach (e.g. length of MGS EAT and MGS thrie beam transition is approximately 93').

Typically, the downstream end of a bridge on a one-way road does not need additional barrier. However if there are other hazards to shield(e.g. sign bridge, steep slopes…), a thrie beam transition to beam guard (see SDD 14B45 see sheet b), beam guard (if needed), and a type II terminal (see SDD 14B47) should be installed.

Example 2 Rock Wall

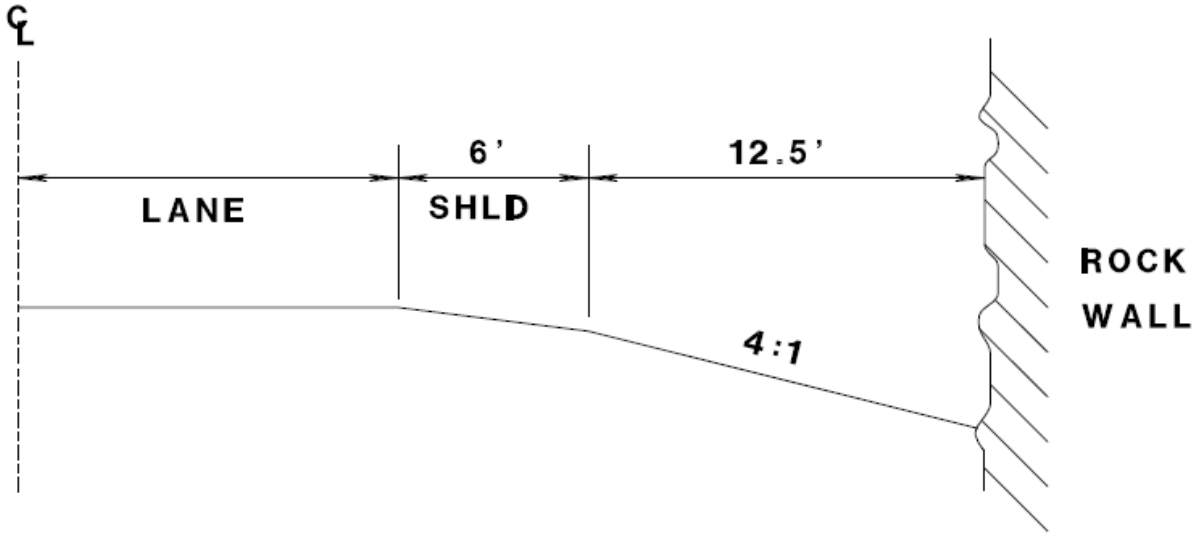

Figure F Example 2 Outside Of Curve Cross Section

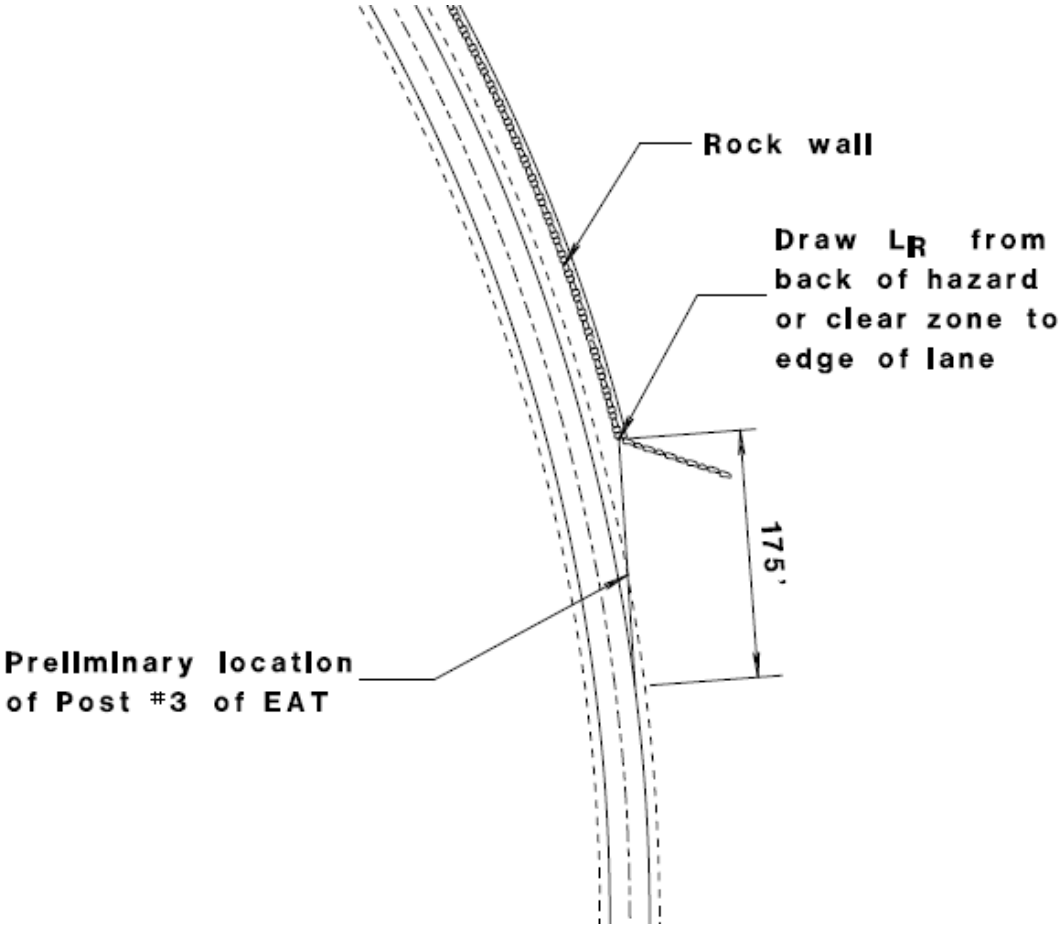

Figure G Example 2 Outside of Curve Plan View (Runout Length)

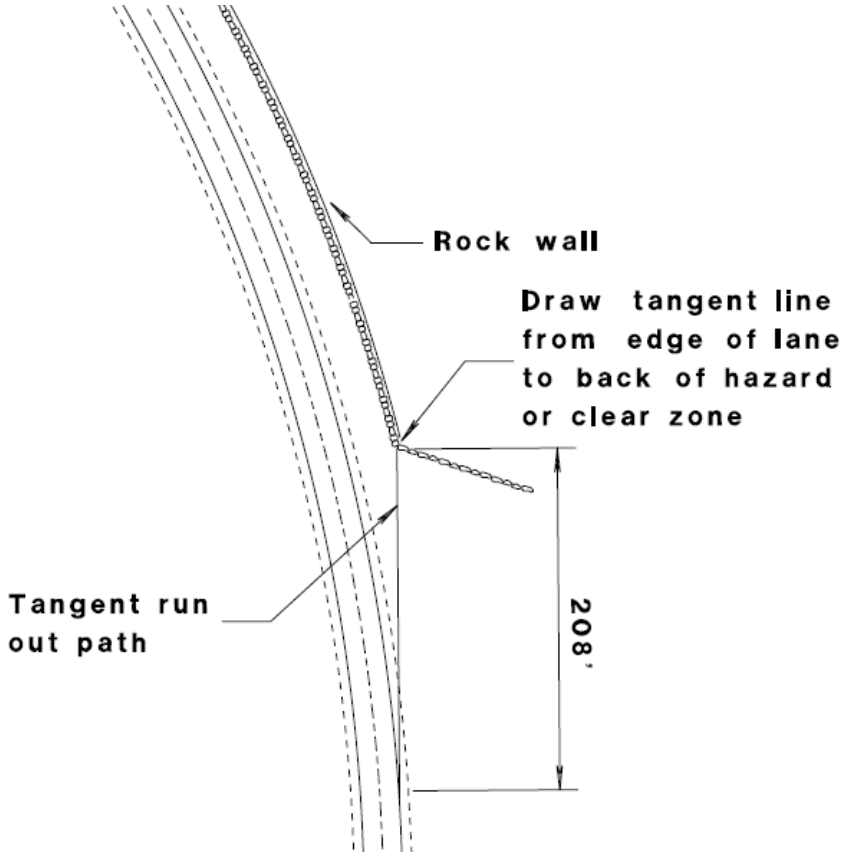

Figure H Example 2 Outside of Curve Plan View (Tangent Path)

Given:

Design AADT= 750

Design Speed = 55 MPH

Curve Radius = 1150'

Clear Zone: 14' (from As-built plans 3R construction)

L_R= 175' (See Table 1)

Find:

Adjusted clear zone value for curve.

Is rock wall within the adjusted clear zone?

Is the rock wall a hazard?

LON for installation compensating for curve.

Solution:

K_{CZ}=1.3 (See 11-15-1)

Adjusted Clear Zone=14 X 1.3 = 19.6'

Distance from edge of lane to edge of rock wall =6' (shoulder width)+12.5 (distance to rock wall)=18.5'

Rock wall is within adjusted clear zone install barrier.

L_R is less than drawn tangent runout of 208' (see **Figures G and H**). Use L_R to locate LON point for barrier system.

Example 3 Outside of Curve Cattle Pass

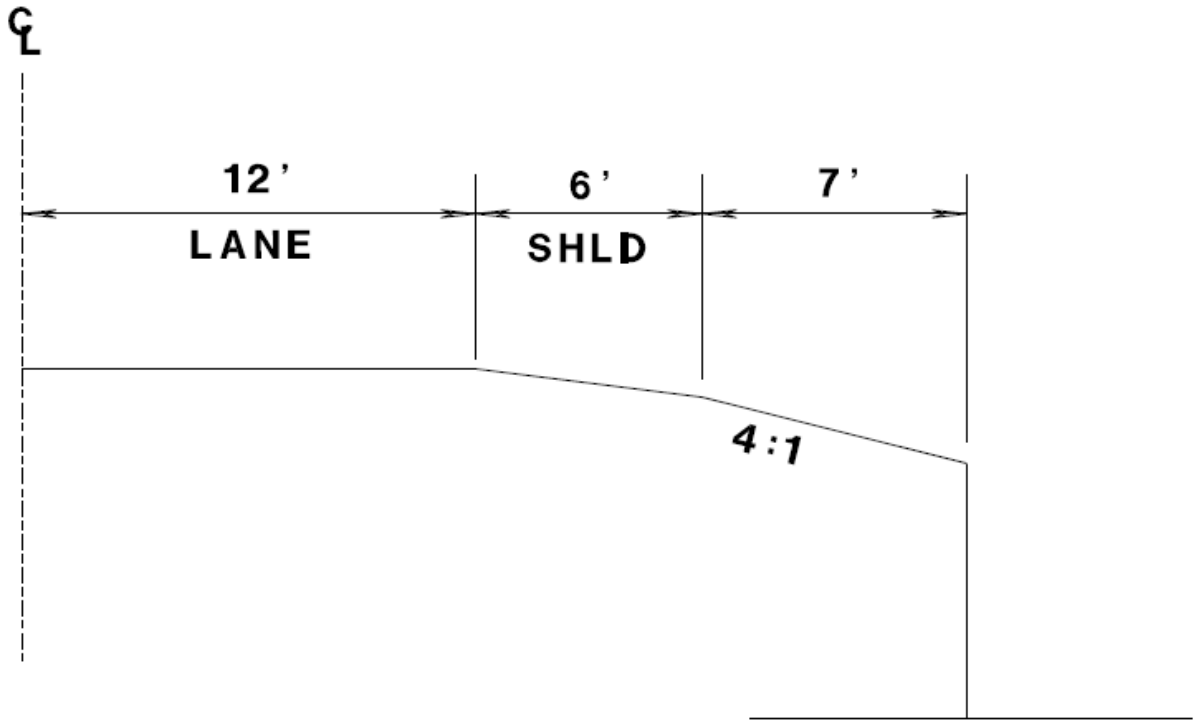

Figure I Example 3 Outside of Curve Cross Section View

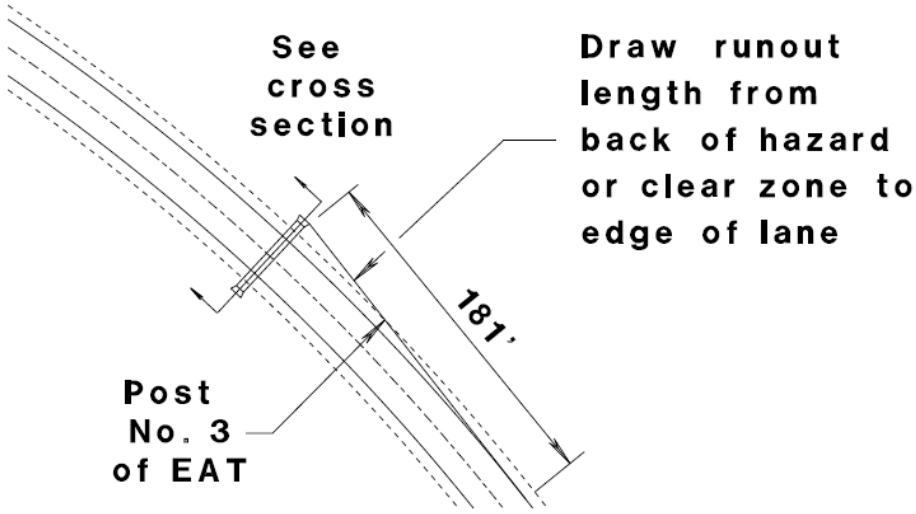

Figure J Example 3 Outside Of Curve Plan View (Tangent Runout Length)

Given:

Design AADT: 5130

Design Speed = 55 MPH

Curve Radius = 1150'

Clear Zone: 24-30’ (See 11-15-1)

L_R= 220’ (See Table 1)

Find:

Adjusted clear zone value for curve.

Is the cattle pass within the clear zone?

Is the cattle pass opening a hazard?

What is LON for installation compensating for curve?

Solution:

K_{CZ}=1.4 (See 11-15-1)

Adjusted Clear Zone=30 X 1.4 = 42’

Distance from edge of lane to back of cattle pass =6’ (shoulder width)+7’(distance to back of cattle pass)=13’

Cattle pass is within adjusted clear zone and is a hazard; therefore install barrier.

Assuming that all slopes around the cattle pass are traversable and there are no other hazards to shield, L_R is greater than tangent runout of 181’ (see **Figure J**). Use drawn tangent runout length of 181’ to locate LON point for barrier system on the outside of curve.

Use desirable clear zone values for new installation, or if the cattle pass required reconstruction. Structures like cattle passes can become future pinch points for future road projects. If a barrier system is needed to shield these new or reconstructed structures the “end point of the barrier” should be based off of the desirable clear zone.

Example 4 Inside of Curve Cattle Pass

Use information provided in example 3.

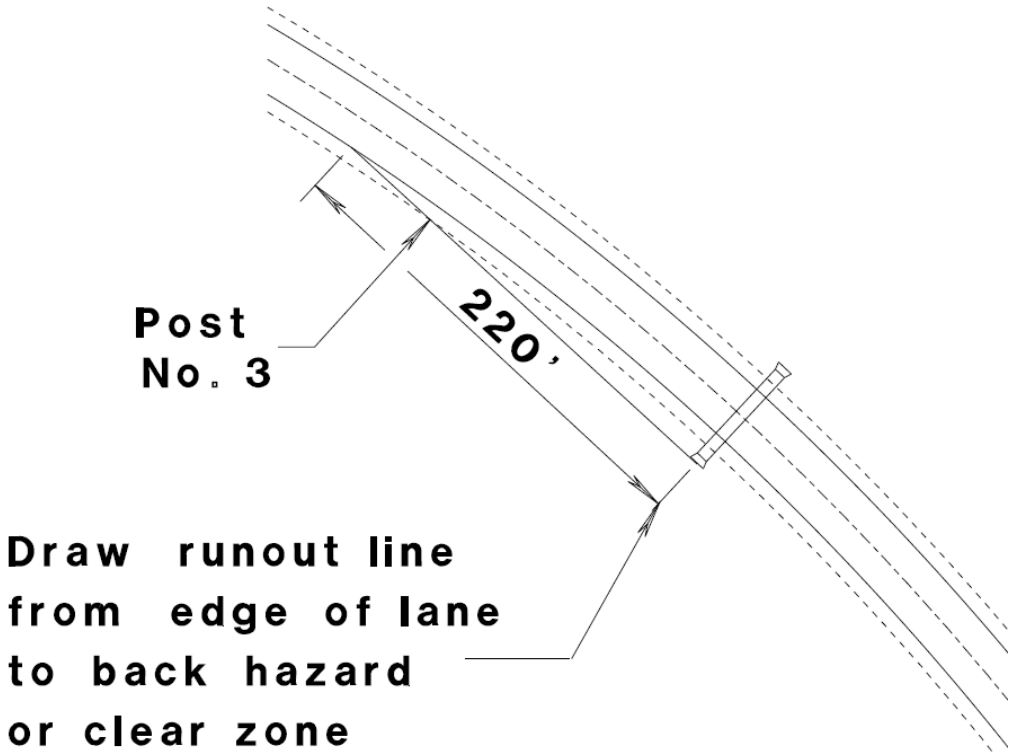

Figure K Example 4

Roadside Design Factors to Consider

Some of the information below is specific to barrier systems. Some of the information below can apply to all aspects of roadside design.

Issue	Discussion
AADT	Typically, as AADT increases, there is an increase chance that hazard will be impacted. Usually, as the number of impacts increase, crash severity increases. Also, as the number of impacts increase it is more likely that a critical impact (i.e. high speed, high impact angle…) will occur.
Accumulative Effect of Spot Improvements	It may be more cost effective to fully replace verses performing multiple modifications to a barrier system.
Age of Barrier System	Replacing older barrier systems improves safety and reduces long term maintenance costs. Older crash tests used lighter vehicles with lower center of gravity and shallower impact angles. Because of these issues, it can be difficult for older barrier systems to interact with newer vehicles. Due to exposure to the elements, older barrier systems may be degraded.
Barrier Safety Performance	Barrier safety performance is broken into to two main categories: general and site specific. General performance is based on the average performance of each type of barrier systems (e.g. comparing beam guard verses concrete barrier). Site specific performance uses actual police crash reports for a given project or location. As working width of the barrier system decreases the probability of injury or fatality increases. From a general performance perspective, use barrier systems that use all available working width before using barrier systems with less working width (i.e. cable barrier over semi-rigid barrier, semi-rigid barrier over rigid barrier). If site specific data indicates that a barrier system is not performing, changes to the barrier system can be justified (e.g. a fixed object behind a barrier system is being impacted). Changes can range from spot improvements of the existing barrier to installing a different barrier system. Site or project conditions may assist in selecting appropriate action. For example, a fixed object is within the working width of an existing beam guard installation. Viable options are: relocate the object, reducing the working width of the beam guard or replacing beam guard with concrete barrier.
Collision Frequency	Some locations ROR crashes are more likely[2]. In these locations, it is likely that a severe crash will occur. It is also more likely that a critical impact (i.e. high speed, high impact angle…) will occur. Locations of concern are: projects that have segments with a metamanager ROR Flag, and locations that are more prone to ROR crashes[3]. Some examples of locations more prone to ROR are curves, weave sections, merge/diverge sections, or locations that violated driver expectation. Provide additional effort to improve roadside design in locations of high collision frequency. Efforts to improve roadside design include: clear zone improvements, hazard removals, use of breakaway hardware, modifying existing barrier systems, installing a new barrier system of the same type or installing a completely different barrier system.
Collision Severity	Some locations may have low occurrence of ROR crashes, but high crash severity. For example a grove of trees has been hit twice in 5 years (i.e. low frequency). But, each of the crashes has lead to a fatality (high severity). A review of the police reports may indicate a collision severity issue. There is a difference between collision severity and consequence of a collision. Collision severity can be traced to actual police reports (e.g. reports indicate that people are hitting a grove of tree) or physical evidence (e.g. tree has impact scars). Collision severity typically deals with frequently encountered roadside object that require high speed impacts to cause injury (e.g. bridge pier, beam guard, foreslopes…)[4]. Provide additional effort to improve roadside design in locations with high collision severity. Efforts to improve roadside design include: clear zone improvements, hazard removals, use of breakaway hardware, modifying existing barrier systems, installing a new barrier system of the same type or installing a completely different barrier system.

[2] A simple definition of Run off the Road is: any non-intersection crash, where a vehicle has left its lane and has either struck a fixed object, traversed a slope, hit a vehicle in the opposing lanes of travel or rolled over.

[3] See Meta-Manager documentation for procedure to assign crash flags.

[4] High speed does not always equate to a design speed of 45 mph or greater. For example impacts on trees at 35 mph can cause serious injuries or fatalities.

Consequence of a Collision	Consequence of collision deals with hazards that can generate serious crash outcomes. Many of the hazards that fall into this category are not frequently encountered along the roadway.[5] Consequence of a collision may not be associated with police crash reports. Some collisions, regardless of speed, will have dire consequences for vehicle occupants. Some examples are: vehicle falls off a cliff; vehicle hits a hazardous chemical tank. Some collisions may have negative consequences to others using a transportation network. Some examples are: dropping an overhead sign on to a roadway; dropping a light pole into an area of heavy pedestrian concentration. Some collisions may have negative consequences for a whole community. Some examples are: vehicle enters an electrical sub-station; vehicle hits a major gas valve. Provide additional effort to improve roadside design in locations where consequence of collision is severe. Efforts to improve roadside design include: clear zone improvements, hazard removals, use of breakaway hardware, modifying existing barrier systems, installing a new barrier system of the same type or installing a completely different barrier system. In some cases, consequence of a collision could lead a designer to install a barrier system when normally a barrier system would not be required.
Cost	Costs vary for different barrier systems. Consider installation, collision and maintenance costs when selecting a barrier system. Installation costs include the cost of providing grading, drainage, transitions, barriers and terminals. Collision costs are based on severity, consequences, and frequency of collision. Maintenance costs consist of repair costs (i.e. collision generated repairs), and the cost of maintaining systems (e.g. the periodic adjustments of a barrier system due to exposure to the elements). The decision to use a more rigid barrier system for a whole project because of maintenance concerns requires the analysis of collision costs. Costs and options on how to modify different barrier systems vary. What may be an easy modification for a barrier system (e.g. raising beam guard height), may to be a difficult task for another barrier system (e.g. concrete barrier). HSIP severity costs are not appropriate for this kind of analysis.
Crash Tested Hardware	Impacts into crashworthy barrier systems can sometimes have undesirable results. Undesirable results are more likely with a non-crash tested barrier system. Avoid modifying existing SDDs to fit a give location or situation. In some situations, it may be desirable to provide a modified barrier system over no barrier system.[6] Two options present themselves at a given location or situation; option one would install a barrier system per SDD. Option two would modify a barrier system to fit a given location or situation. Option one is more desirable.
Duration	The longer a hazard is exposed to traffic the more likely it will be impacted or experience a critical impact. For example, in one year a one mile section of a roadway with 2,500 AADT will have on average 2.2 vehicles leaving the roadway. In 10 years the same stretch of roadway will have on average 22 vehicles leaving the roadway. Provide additional effort to improve roadside design on projects with an anticipated long service life. Service life is the time between the end of construction for the current project and next construction project. Projects with service life of 15 years or greater are considered long service life projects. Roadways that repeatedly receive minimum roadway improvement or maintenance should look to improve roadside design because of exposure. Efforts to improve roadside design include: clear zone improvements, hazard removals, use of breakaway hardware, modifying existing barrier systems, installing a new barrier system of the same type or installing a completely different barrier system.

[5] Overhead sign, sign bridges, and light poles would be the exception to this general rule.
[6] Limited project by project exceptions allowing modification of barrier system may be granted by Bureau of Project Development (BPD). However, these exceptions will be rare. Document the exception in DSR.

Existing Site Conditions	Site conditions may limit what options are available. For example, a designer may have to install the short radius beam guard system.
Speed	As speed increases, collision severity increases. Consider speed of the errant vehicle when designing roadside features.[7] Speed of an errant vehicle may be higher or lower than the design speed or posted speed of a roadway. [8,9]
Type of Project	The scope of some projects allow for more effort to be placed on roadside design issues. For example, a project that is providing spot repairs on a bridge deck is less likely to remove a non-crashworthy bridge parapet.[10] If a bridge project was replacing the bridge's deck, a crashworthy bridge parapet should be installed.

[7] 2006 AASHTO Roadside Design Guide
[8] 2006 AASHTO Roadside Design Guide

[9] Geometric features, time of day or traffic volumes may influence vehicle's impact speed.
[10] More than likely this project could provide some modifications to make parapet better than what it was. For example, the parapets could be delineated.

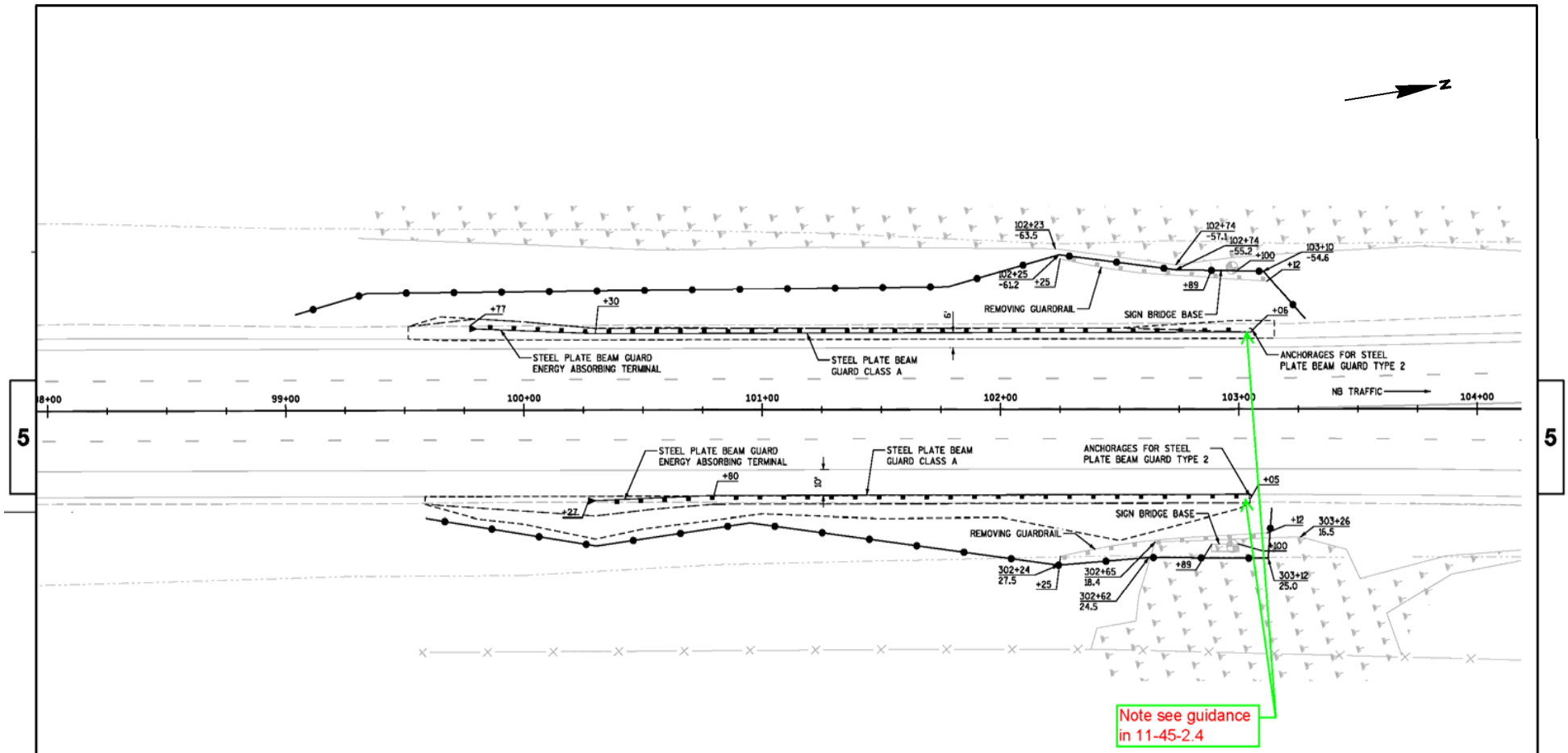

BENCH MARKS

NO.	STATION	DESCRIPTION	ELEV.
160	99+17 LT	PK NAIL IN ASPHALTIC PAVEMENT	761.57
210	99+23 RT	PK NAIL IN ASPHALTIC PAVEMENT	761.38

LEGEND

TEMPORARY DITCH CHECKS

SILT FENCE

NOTES

USE INLET PROTECTION TYPE A ON ALL INLETS

Cross sections are not shown on this sheet.
Cross sections are available elsewhere in the plan.

0 20 40
SCALE, FEET

PROJECT NO: 1450-01-72	HWY: IH 43	COUNTY: OZAUKEE	STH 57 SIGN BRIDGE (LOCATION 009)	SHEET 19	E

FILE NAME : X:\200005\20005\20005.05\Ozaukee_Cnty\OZA 043 009 STH 57 Sign Bridge\Engineering_Documents\OZA 043 009 pp_sheet.dgn PLOT DATE : 1/18/2011 PLOT BY : crutkowski PLOT NAME : PLOT SCALE : 1:40 WISDOT/CADDS SHEET 44

A working copy of this spreadsheet is available at: FDM 11-45-02A7.xls1

Beam Guard Analysis

Project		
Location		
Length of Existing Beam Guard Run		ft
Additional Beam Guard Length Needed		ft
Length of Beam Guard to Remove		ft
Number of Blocks and Post that need Adjustment or Replacement		each
Length of rail that needs height adjustment		ft
Length of Rail that needs Replacement		each
Age of System		years
Number of Years to Next Project in Area		years
Average Item Costs		
Install Beam Guard		per ft
Remove/salvage Beam Guard		per ft
Replace/adjust Block and Post		each
Adjust Beam Guard		per ft
Replace Rail and Hardware		per ft
Depreciated Value (assuming removal of whole system)	$ -	
Barrier Modification Cost		
Additional Beam Guard needed	$ -	
Removal/salvage of Beam Guard	$ -	
Adjust or Replace Block and Post	$ -	
Adjust Beam Guard height	$ -	
Replace Rail and Hardware	$ -	
Total Cost of Modification	$ -	
Depreciated Value-Cost of Modifications	$ -	
Useful Service Life- Planned Barrier Life	25	

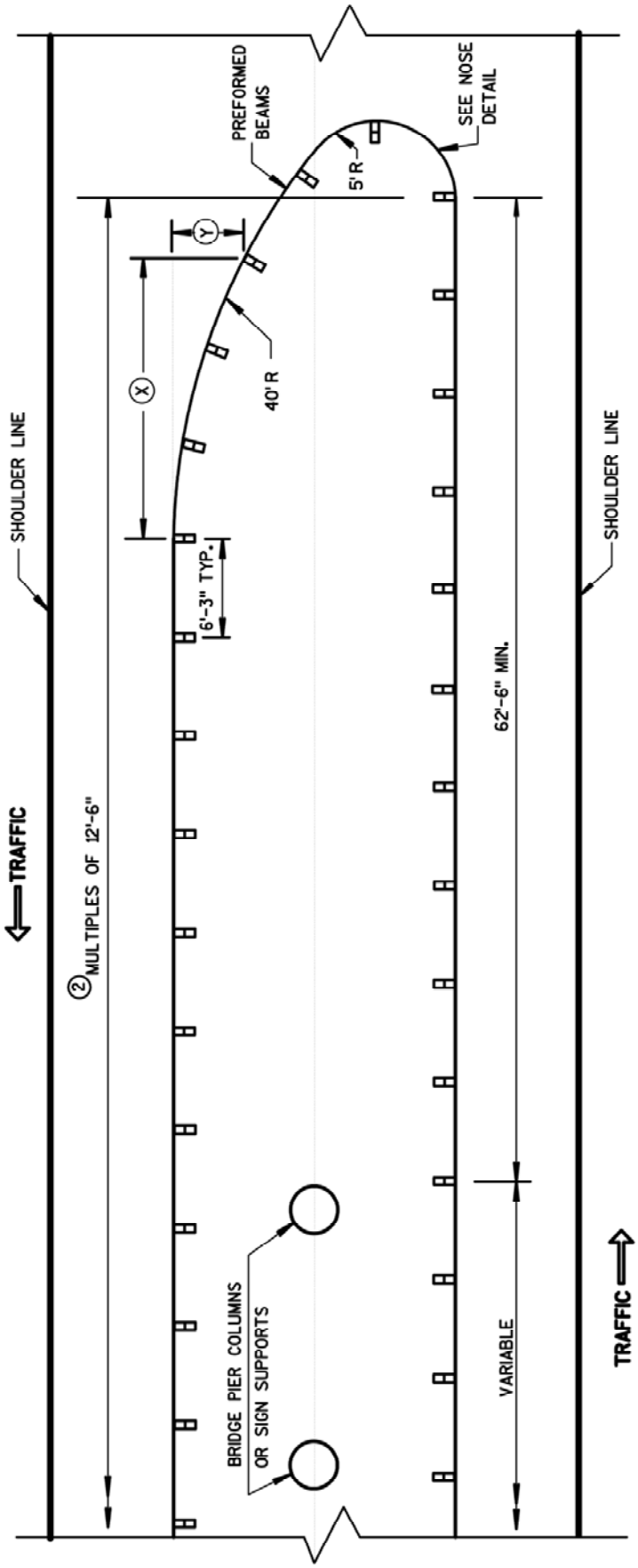

PLAN VIEW

TYPICAL LAYOUT AT PIERS AND SIGN SUPPORTS

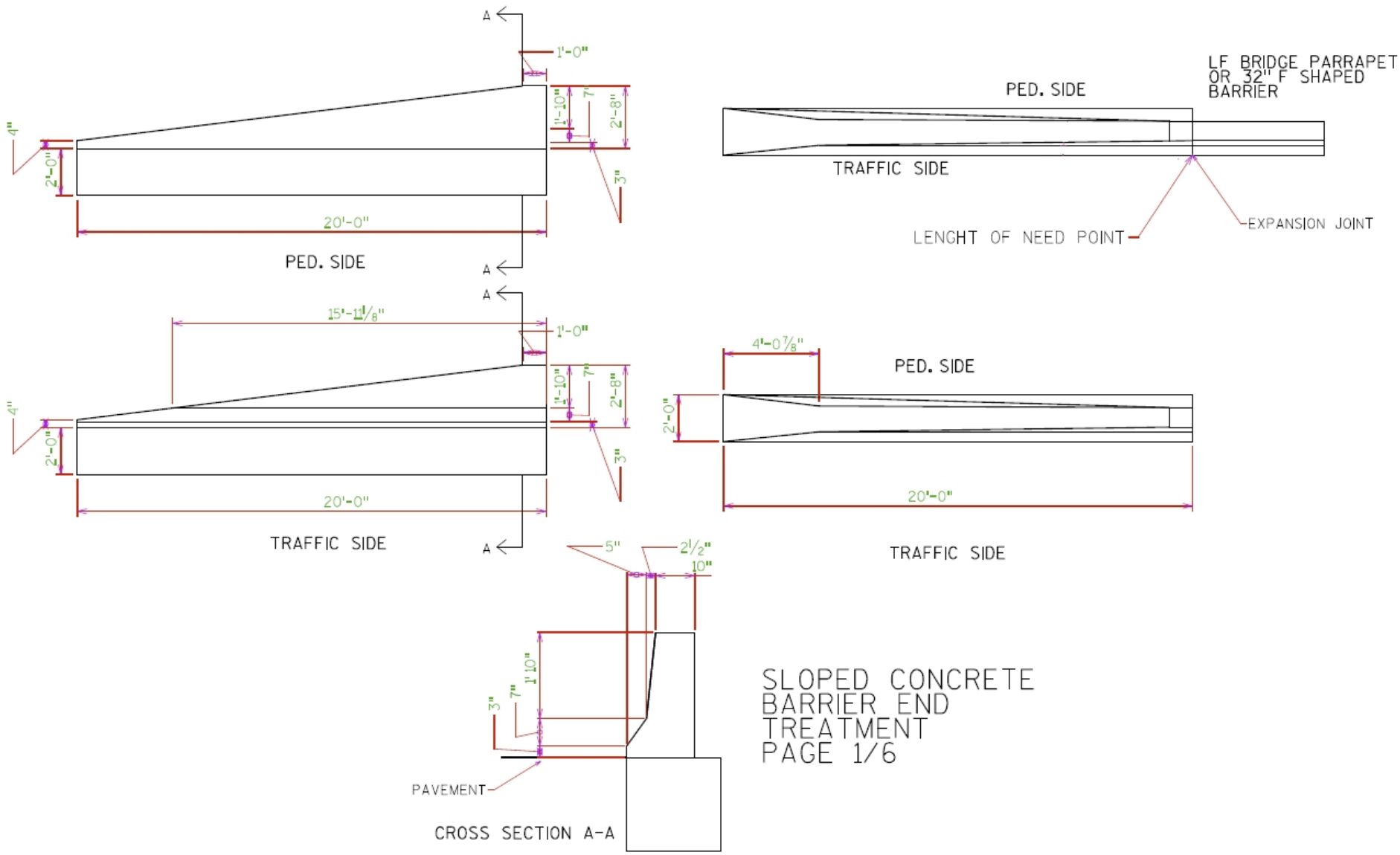
A
1'-0"
1'-10"
7"
2'-8"
4"
2'-0"
3"
20'-0"
PED. SIDE
A
LF BRIDGE PARRAPET
OR 32" F SHAPED
BARRIER
PED. SIDE
TRAFFIC SIDE
LENGHT OF NEED POINT
EXPANSION JOINT
A
15'-11 1/8"
1'-0"
1'-10"
7"
2'-8"
4"
2'-0"
3"
20'-0"
TRAFFIC SIDE
A
4'-0 7/8"
PED. SIDE
2'-0"
20'-0"
TRAFFIC SIDE
5"
2 1/2"
10"
1'10"
3"
7"
PAVEMENT
CROSS SECTION A-A
SLOPED CONCRETE
BARRIER END
TREATMENT
PAGE 1/6

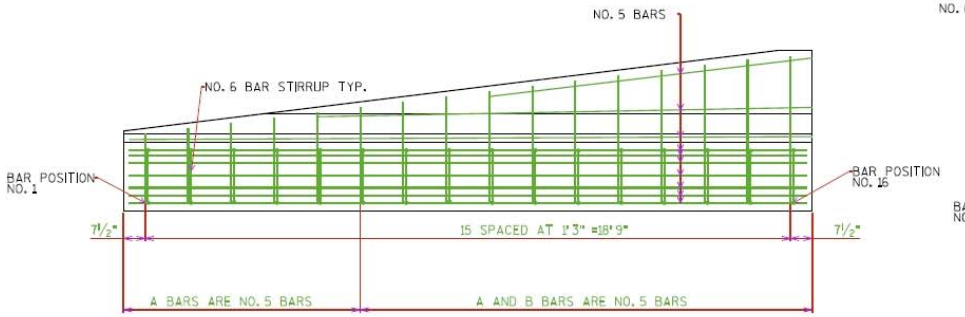

PROFILE VIEW OF REINFORCEMENT

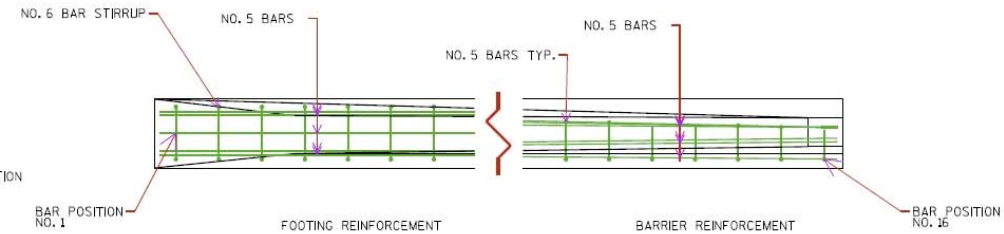

PLAN VIEW OF REINFORCEMENT

STAGGER LAPPING OF LONGITUDINAL STEEL. MINIMUM OVERLAP OF STEEL 2 FEET. BARS AT LAPS TO BE FIRMLY TIED OR CONNECTED.

4000 PSI CONCRETE AIR ENTRAINMENT PER STANDARD SPECIFICATION 501.

USE ¾" BEVEL OR 1" RADIUS ON ALL EXPOSED SHARP EDGES UNLESS OTHERWISE NOTED.

2" CLEAR COVER TYPICAL. 1½" MIN CLEAR COVER.

CONSTRUCT PER STANDARD SPECIFICATION 603.

PLACE BARRIER PERPENDICULAR TO SHOULDER GRADE, UNLESS INDICATED IN PLAN.

SLOPED CONCRETE BARRIER END TREATMENT PAGE 2/6

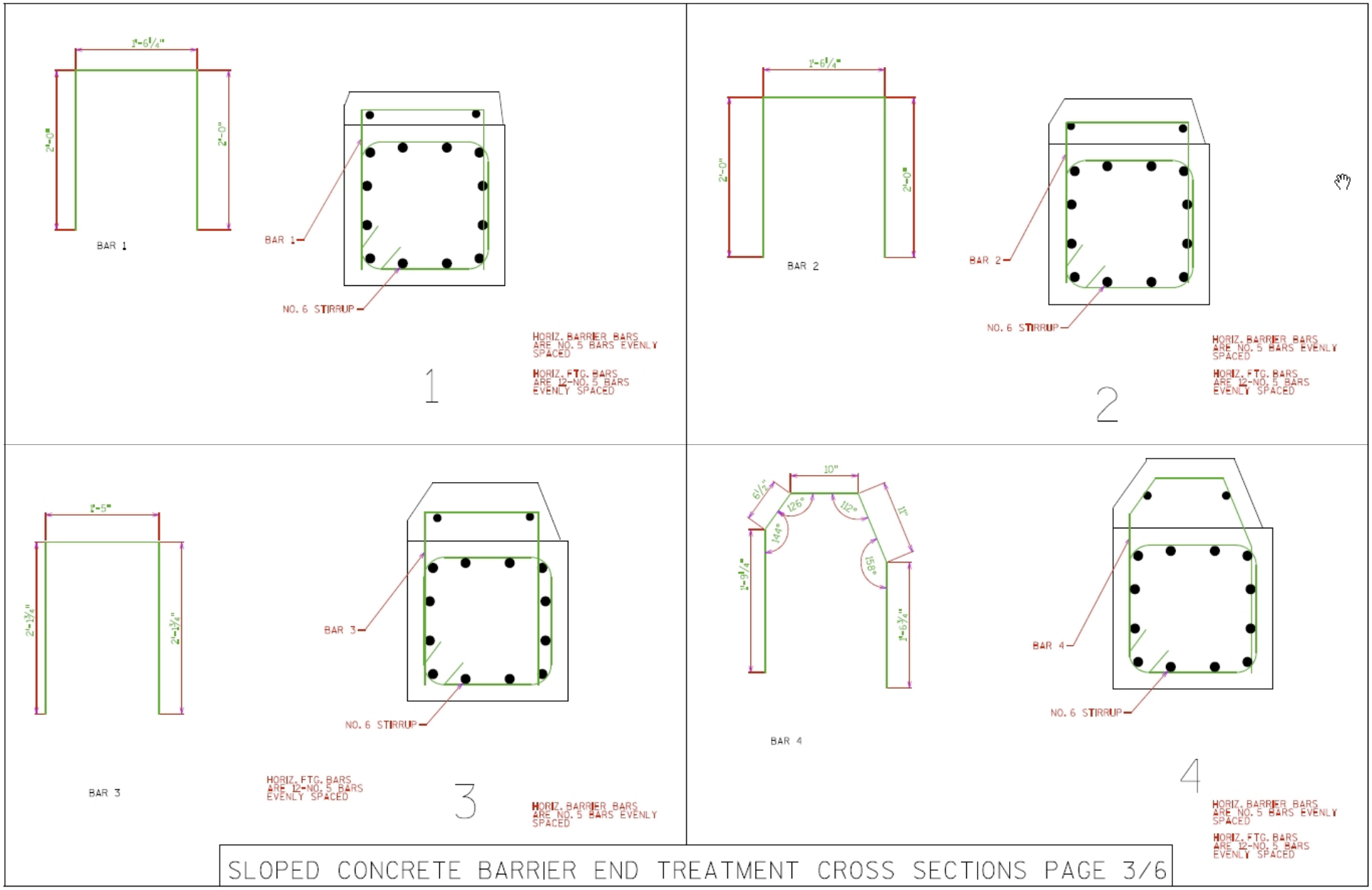
1'-6¼"
2'-0"
2'-0"
BAR 1
BAR 1
NO. 6 STIRRUP
HORIZ. BARRIER BARS ARE NO. 5 BARS EVENLY SPACED
HORIZ. FTG. BARS ARE 12-NO. 5 BARS EVENLY SPACED
1
1'-6¼"
2'-0"
2'-0"
BAR 2
BAR 2
NO. 6 STIRRUP
HORIZ. BARRIER BARS ARE NO. 5 BARS EVENLY SPACED
HORIZ. FTG. BARS ARE 12-NO. 5 BARS EVENLY SPACED
2
1'-5"
2'-1¾"
2'-1¾"
BAR 3
BAR 3
NO. 6 STIRRUP
HORIZ. FTG. BARS ARE 12-NO. 5 BARS EVENLY SPACED
3
HORIZ. BARRIER BARS ARE NO. 5 BARS EVENLY SPACED
10"
6½"
126°
112°
11"
144°
156°
1'-9¼"
1'-6¾"
BAR 4
BAR 4
NO. 6 STIRRUP
4
HORIZ. BARRIER BARS ARE NO. 5 BARS EVENLY SPACED
HORIZ. FTG. BARS ARE 12-NO. 5 BARS EVENLY SPACED
SLOPED CONCRETE BARRIER END TREATMENT CROSS SECTIONS PAGE 3/6

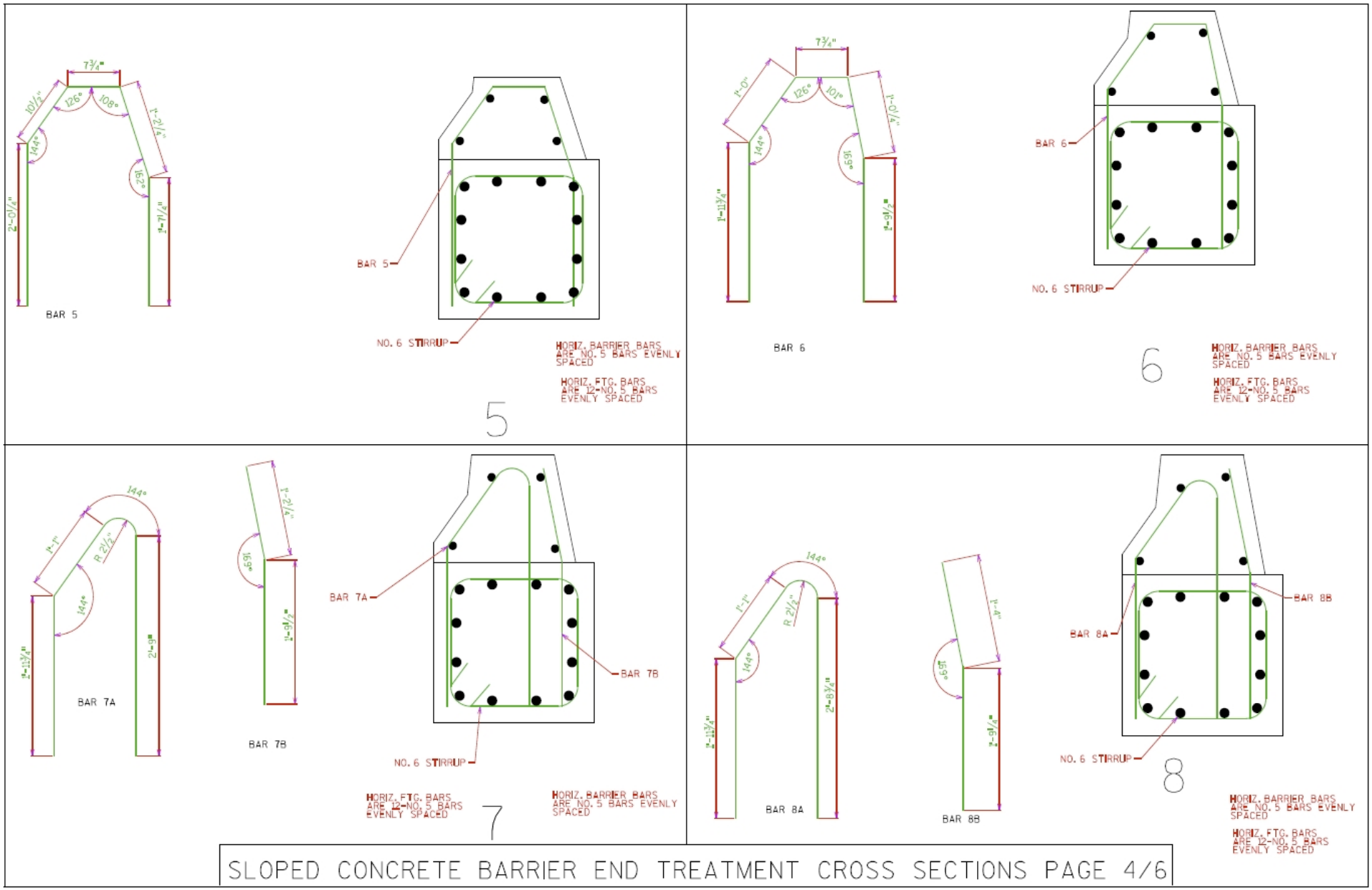
BAR 5
BAR 5
NO. 6 STIRRUP
HORIZ. BARRIER BARS ARE NO. 5 BARS EVENLY SPACED
HORIZ. FTG. BARS ARE 12-NO. 5 BARS EVENLY SPACED
5
BAR 6
BAR 6
NO. 6 STIRRUP
HORIZ. BARRIER BARS ARE NO. 5 BARS EVENLY SPACED
HORIZ. FTG. BARS ARE 12-NO. 5 BARS EVENLY SPACED
6
BAR 7A
BAR 7B
BAR 7A
BAR 7B
NO. 6 STIRRUP
HORIZ. FTG. BARS ARE 12-NO. 5 BARS EVENLY SPACED
HORIZ. BARRIER BARS ARE NO. 5 BARS EVENLY SPACED
7
BAR 8A
BAR 8B
BAR 8A
BAR 8B
NO. 6 STIRRUP
HORIZ. BARRIER BARS ARE NO. 5 BARS EVENLY SPACED
HORIZ. FTG. BARS ARE 12-NO. 5 BARS EVENLY SPACED
8
SLOPED CONCRETE BARRIER END TREATMENT CROSS SECTIONS PAGE 4/6

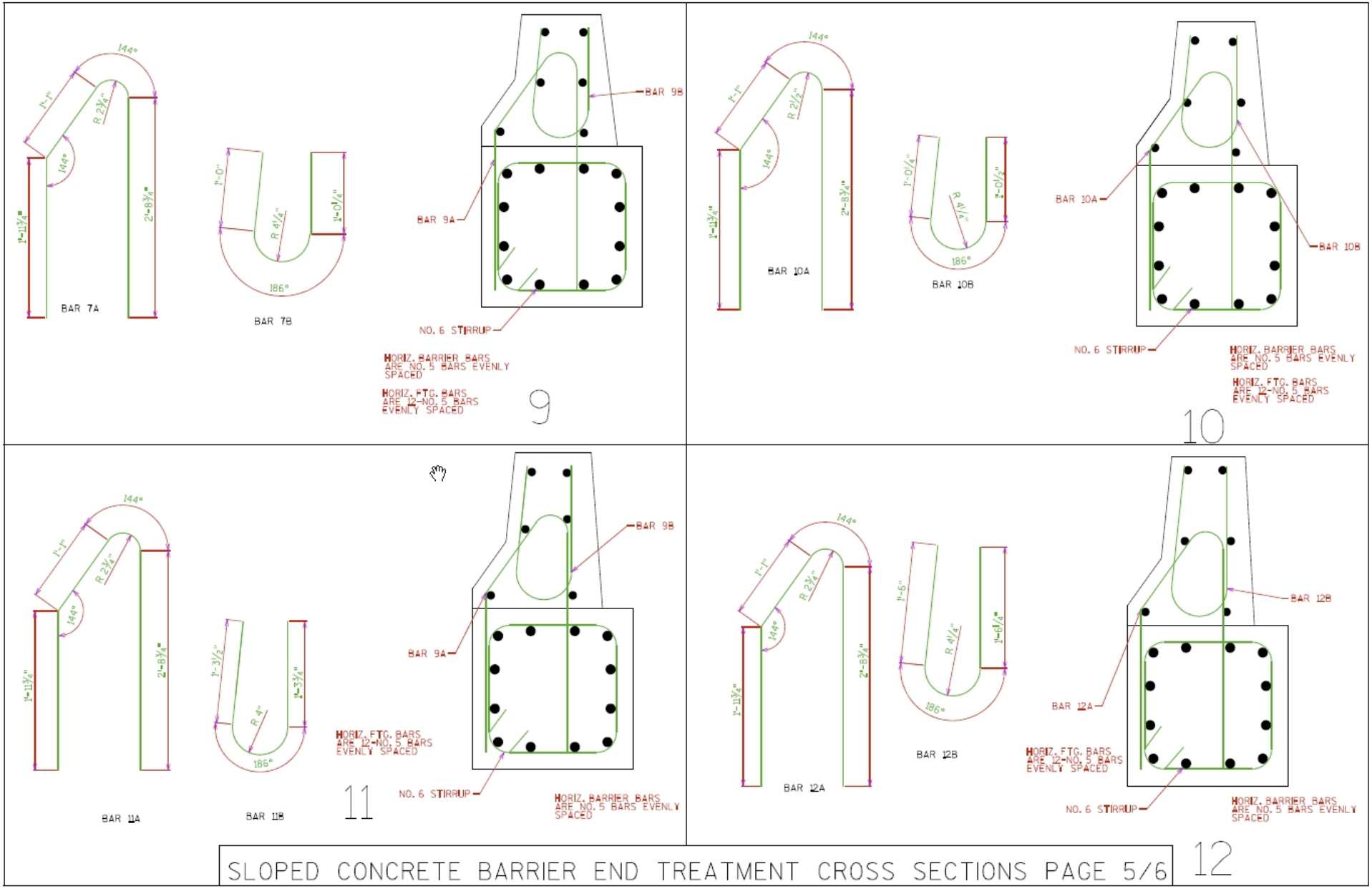
144°
1'-1"
R 2¾"
144°
1'-11¾"
2'-8¾"
BAR 7A
1'-0"
R 4¼"
186°
1'-0¼"
BAR 7B
BAR 9B
BAR 9A
NO. 6 STIRRUP
HORIZ. BARRIER BARS ARE NO. 5 BARS EVENLY SPACED
HORIZ. FTG. BARS ARE 12-NO. 5 BARS EVENLY SPACED
9
144°
1'-1"
R 2½"
144°
1'-11¾"
2'-8¾"
BAR 10A
1'-0¼"
R ¼"
186°
1'-0½"
BAR 10B
BAR 10A
BAR 10B
NO. 6 STIRRUP
HORIZ. BARRIER BARS ARE NO. 5 BARS EVENLY SPACED
HORIZ. FTG. BARS ARE 12-NO. 5 BARS EVENLY SPACED
10
144°
1'-1"
R 2¾"
144°
1'-11¾"
2'-8¾"
BAR 11A
1'-3½"
R 4"
186°
1'-3¾"
BAR 11B
HORIZ. FTG. BARS ARE 12-NO. 5 BARS EVENLY SPACED
BAR 9B
BAR 9A
NO. 6 STIRRUP
HORIZ. BARRIER BARS ARE NO. 5 BARS EVENLY SPACED
11
144°
1'-1"
R 2¾"
144°
1'-11¾"
2'-8¾"
BAR 12A
1'-6"
R 4¼"
186°
1'-6¼"
BAR 12B
BAR 12B
BAR 12A
HORIZ. FTG. BARS ARE 12-NO. 5 BARS EVENLY SPACED
NO. 6 STIRRUP
HORIZ. BARRIER BARS ARE NO. 5 BARS EVENLY SPACED
SLOPED CONCRETE BARRIER END TREATMENT CROSS SECTIONS PAGE 5/6
12

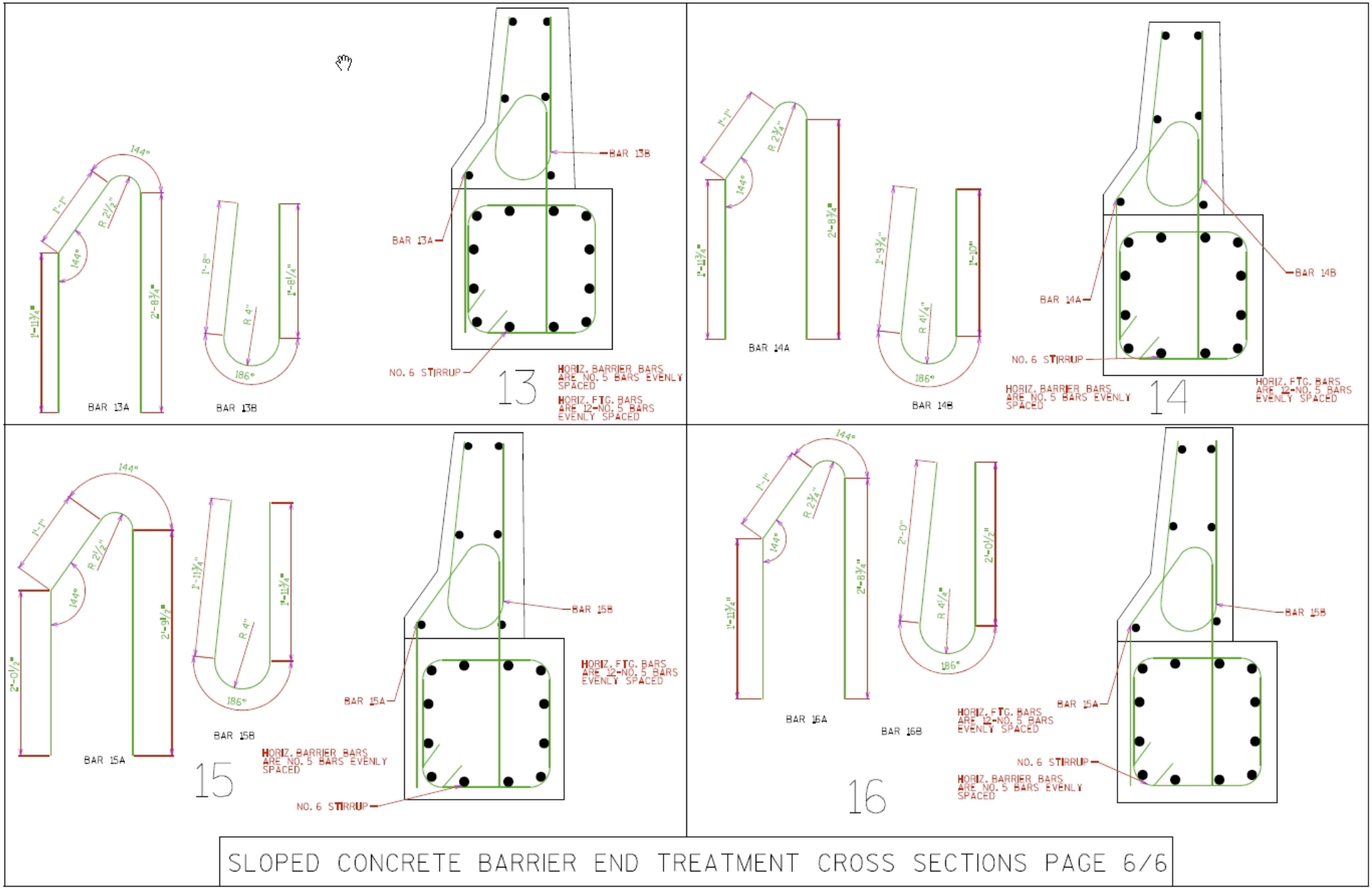
144°
1'-1"
R 2¼"
144°
1'-11¾"
2'-8¾"
BAR 13A
1'-8"
R 4"
186°
1'-8¼"
BAR 13B
BAR 13B
BAR 13A
NO. 6 STIRRUP
13
HORIZ. BARRIER BARS ARE NO. 5 BARS EVENLY SPACED
HORIZ. FTG. BARS ARE 12-NO. 5 BARS EVENLY SPACED
1'-1"
R 2¾"
144°
1'-11¾"
2'-8¾"
BAR 14A
1'-9¾"
R 4¼"
186°
1'-10"
BAR 14B
BAR 14B
BAR 14A
NO. 6 STIRRUP
HORIZ. BARRIER BARS ARE NO. 5 BARS EVENLY SPACED
14
HORIZ. FTG. BARS ARE 12-NO. 5 BARS EVENLY SPACED
144°
1'-1"
R 2½"
144°
2'-0½"
2'-9½"
BAR 15A
1'-11¾"
R 4"
186°
2'-11¾"
BAR 15B
BAR 15B
BAR 15A
HORIZ. FTG. BARS ARE 12-NO. 5 BARS EVENLY SPACED
HORIZ. BARRIER BARS ARE NO. 5 BARS EVENLY SPACED
NO. 6 STIRRUP
15
144°
1'-1"
R 2¾"
144°
1'-11¾"
2'-8¾"
BAR 16A
2'-0"
R 4¼"
186°
2'-0½"
BAR 16B
BAR 15B
BAR 15A
HORIZ. FTG. BARS ARE 12-NO. 5 BARS EVENLY SPACED
NO. 6 STIRRUP
HORIZ. BARRIER BARS ARE NO. 5 BARS EVENLY SPACED
16
SLOPED CONCRETE BARRIER END TREATMENT CROSS SECTIONS PAGE 6/6

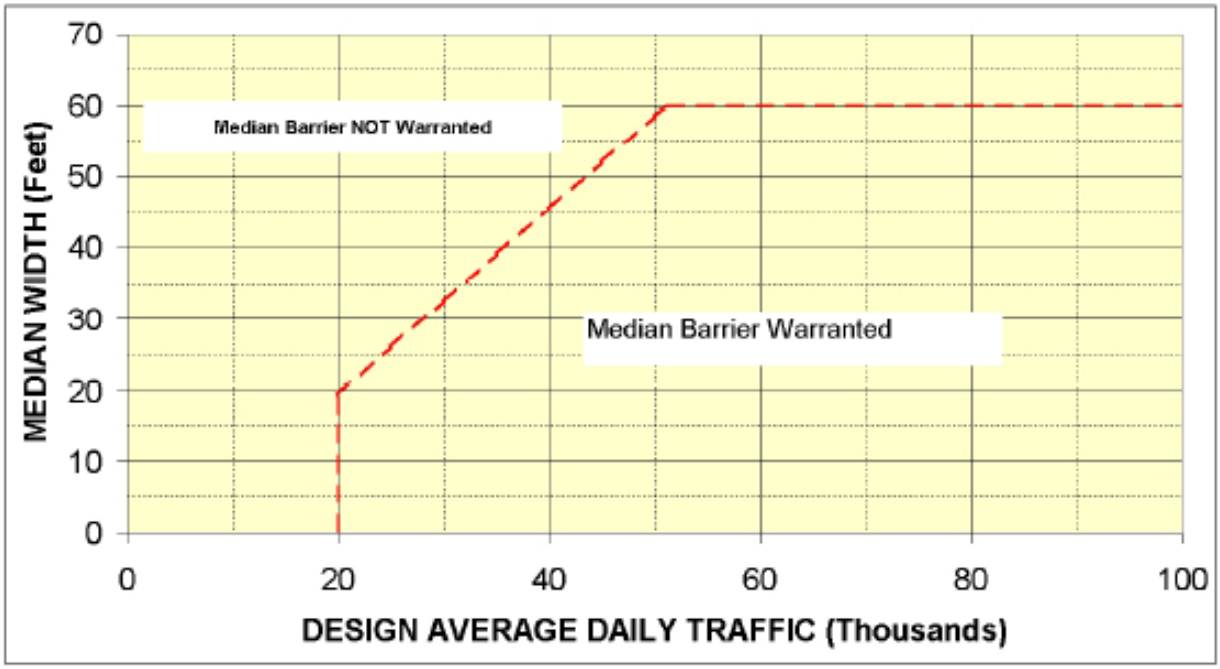
70
60
50
40
30
20
10
0
MEDIAN WIDTH (Feet)
Median Barrier NOT Warranted
Median Barrier Warranted
0
20
40
60
80
100
DESIGN AVERAGE DAILY TRAFFIC (Thousands)

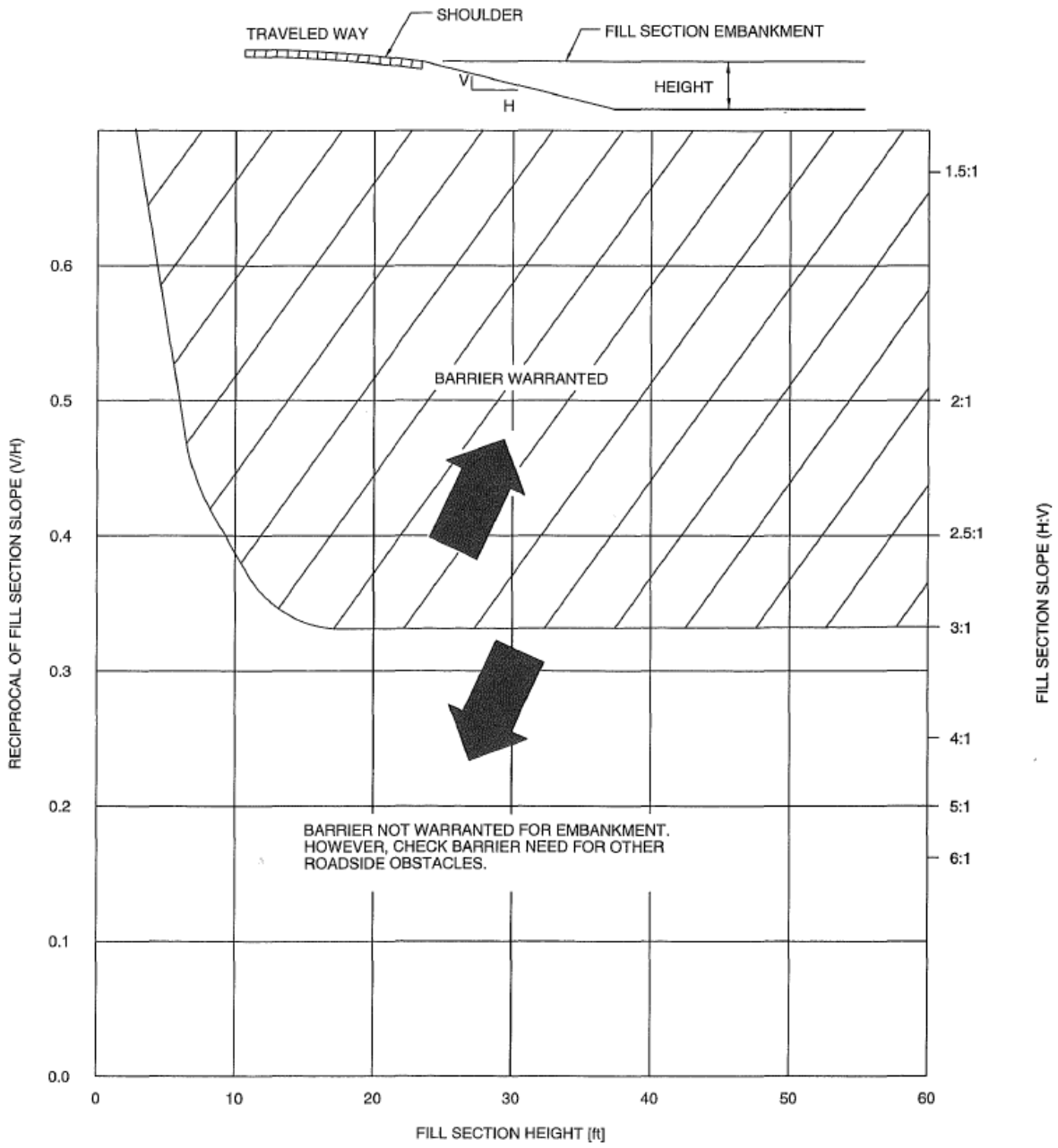

From AASHTO Roadside Design Guide Copyright 2011, by the American Association of State Highway and Transportation Officials, Washington, DC. Used by permission. Documents may be purchased from the AASHTO bookstore at 1-800-231-3475 or online at http://bookstore.transportation.org.

Table A.1: Traffic Growth Adjustment Factor, TG

Annual Growth Factor	Adjustment Factor
0%	1.00
1%	1.10
2%	1.21
3%	1.34
4%	1.49
5%	1.65

Table A.2: Horizontal Curve Adjustment Factor, HC

Radius	Adjustment Factor (HC)	
	Hazard on Outside of Curve	Hazard on Inside of Curve
1,911 ft or greater	1.00	1.00
1,431 – 1,910 ft	1.50	1.25
1,151 – 1,430 ft	2.50	1.50
951 – 1,150 ft	3.50	1.75
950 ft or less	4.00	2.00

Table A.3: Down Grade Adjustment Factor, DG

Percent Down Grade	Adjustment Factor (DG)
0 – 2%	1.00
2.1% – 3.0%	1.10
3.1% – 4.0%	1.40
4.1% – 5.0%	1.70
5.1% – 6.0%	1.90
6.1% and larger	2.00

Table A.15: Barrier Warrants for 1V: 2H Foreslopes 13 Feet High X 100 Feet Long

Speed	Hazard Offset From Edge of Lane	Adjusted Traffic Factor (ATF)		
		Not Warranted	Possibly Warranted	Warranted
50 mph	**4 – 7 ft**	0 – 549	550 – 2,999	3,000 (+)
	8 – 11 ft	0 – 599	600 – 3,599	3,600 (+)
	12 – 15 ft	0 – 749	750 – 4,999	5,000 (+)
	16 – 17 ft	0 – 1,399	1,400 (+)	
	18 – 19 ft	0 – 3,999	4,000 (+)	
	20 (+) ft	All		
40 mph	**3 – 7 ft**	0 – 949	950 (+)	
	8 – 11 ft	0 – 1,049	1,050 (+)	
	12 – 13 ft	0 – 1,249	1,250 (+)	
	14 – 15 ft	0 – 1,499	1,500 (+)	
	16 – 17 ft	0 – 3,199	3,200 (+)	
	18 (+) ft	All		
30 mph	**2 – 7 ft**	0 – 2,149	2,150 (+)	
	8 – 10 ft	0 – 2,349	2,350 (+)	
	10 – 11 ft	0 – 3,399	3,400 (+)	
	12 (+) ft	All		
20 mph	**All**	All		

Table 4.17: Barrier Warrants for 1V: 2H Foreslopes 46 Feet High X 100 Feet Long

Speed	Hazard Offset From Edge of Lane	Adjusted Traffic Factor (ATF)		
		Not Warranted	Possibly Warranted	Warranted
50 mph	**4 – 7 ft**	0 – 149	150 – 649	650 (+)
	8 – 11 ft	0 – 199	200 – 749	750 (+)
	12 – 15 ft	0 – 249	250 – 899	900 (+)
	16 – 19 ft	0 – 399	400 – 1,599	1,600 (+)
	20 – 23 ft	0 – 899	900 (+)	
	24 (+) ft	All		
40 mph	**3 – 7 ft**	0 – 249	250 – 949	950 (+)
	8 – 11 ft	0 – 299	300 – 1,249	1,250 (+)
	12 – 15 ft	0 – 349	350 – 1,599	1,600 (+)
	16 – 17 ft	0 – 549	550 – 3,149	3,150 (+)
	18 – 19 ft	0 – 1,299	1,300 (+)	
	20 (+) ft	All		
30 mph	**2 – 7 ft**	0 – 599	600 – 3,199	3,200 (+)
	8 – 11 ft	0 – 749	750 (+)	
	12 – 13 ft	0 – 799	800 (+)	
	14 (+) ft	All		
20 mph	**2 – 7 ft**	0 – 3,799	3,800 (+)	
	8 (+) ft	All		

Number of Vehicle Tree Collisions Per Year

	Rural U.S./State Roadways		Rural Local Roads	
AADT	**Curved**	**Straight**	**Curved**	**Straight**
100	0.12	0.06	0.79	0.12
200	0.15	0.08	1.04	0.15
300	0.17	0.1	1.23	0.17
400	0.19	0.11	1.39	0.19
500	0.21	0.12	1.53	0.21
600	0.22	0.12	1.66	0.22
700	0.23	0.13	1.77	0.24
800	0.25	0.14	1.88	0.25
900	0.26	0.14	1.98	0.26
1,000	0.27	0.15	2.07	0.27
1,100	0.28	0.15	2.16	0.28
1,200	0.29	0.16	2.25	0.29
1,300	0.29	0.16	2.33	0.3
1,400	0.3	0.17	2.41	0.31
1,500	0.31	0.17	2.49	0.32
1,600	0.32	0.17	2.56	0.32
1,700	0.33	0.18	2.64	0.33
1,800	0.33	0.18	2.71	0.34
1,900	0.34	0.19	2.77	0.34
2,000	0.35	0.19	2.84	0.35
2,100	0.35	0.19	2.91	0.36
2,200	0.36	0.2	2.97	0.36
2,300	0.36	0.2	3.03	0.37
2,400	0.37	0.2	3.09	0.38
2,500	0.38	0.21	3.15	0.38
2,600	0.38	0.21	3.21	0.39
2,700	0.39	0.21	3.27	0.39
2,800	0.39	0.21	3.32	0.4
2,900	0.4	0.22	3.38	0.4
3,000	0.4	0.22	3.44	0.41
3,100	0.41	0.22	3.49	0.41
3,200	0.41	0.23	3.54	0.42
3,300	0.42	0.23	3.59	0.42

	Rural U.S./State Roadways		Rural Local Roads	
AADT	**Curved**	**Straight**	**Curved**	**Straight**
3,400	0.42	0.23	3.65	0.43
3,500	0.43	0.23	3.70	0.43
3,600	0.43	0.24	3.75	0.44
3,700	0.44	0.24	3.80	0.44
3,800	0.44	0.24	3.85	0.45
3,900	0.45	0.24	3.89	0.45
4,000	0.45	0.24	3.94	0.46
4,100	0.45	0.25	3.99	0.46
4,200	0.46	0.25	4.03	0.47
4,300	0.46	0.25	4.08	0.47
4,400	0.47	0.25	4.13	0.47
4,500	0.47	0.26	4.17	0.48
4,600	0.47	0.26	4.22	0.48
4,700	0.48	0.26	4.26	0.49
4,800	0.48	0.26	4.31	0.49
4,900	0.49	0.26	4.35	0.49
5,000	0.49	0.27	4.39	0.5
5,500	0.51	0.28	4.60	0.52
6,000	0.53	0.28	4.81	0.53
6,500	0.54	0.29	5.00	0.55
7,000	0.56	0.3	5.19	0.57
7,500	0.57	0.31	5.37	0.58
8,000	0.59	0.32	5.55	0.6
8,500	0.6	0.32	5.72	0.61
9,000	0.61	0.33	5.89	0.62
9,500	0.63	0.34	6.05	0.64
10,000	0.64	0.34	6.21	0.65
10,500	0.65	0.35	6.37	0.66
11,000	0.67	0.36	6.52	0.68
11,500	0.68	0.36	6.67	0.69
12,000	0.69	0.37	6.82	0.7
12,500	0.7	0.37	6.97	0.71
13,000	0.71	0.38	7.11	0.72
13,500	0.72	0.39	7.25	0.73
14,000	0.73	0.39	7.39	0.74
14,500	0.74	0.4	7.52	0.75

	Rural U.S./State Roadways		Rural Local Roads	
AADT	**Curved**	**Straight**	**Curved**	**Straight**
15,000	0.75	0.4	7.66	0.76
15,500	0.76	0.41	7.79	0.77
16,000	0.77	0.41	7.92	0.78
16,500	0.78	0.42	8.05	0.79
17,000	0.79	0.42	8.18	0.8
17,500	0.8	0.43	8.30	0.81
18,000	0.81	0.43	8.43	0.82
18,500	0.82	0.43	8.55	0.83
19,000	0.83	0.44	8.67	0.84
19,500	0.84	0.44	8.80	0.85
20,000	0.84	0.45	8.91	0.86

Table A.21: Barrier Warrants for Group of Trees 8 Feet Wide X 100 Feet Long

Speed	Hazard Offset From Edge of Lane	Adjusted Traffic Factor (ATF)		
		Not Warranted	Possibly Warranted	Warranted
50 mph	**4 – 7 ft**	0 – 149	150 – 549	550 (+)
	8 – 11 ft	0 – 199	200 – 749	750 (+)
	12 – 15 ft	0 – 249	250 – 899	900 (+)
	16 – 19 ft	0 – 349	350 – 1,499	1,500 (+)
	20 – 23 ft	0 – 749	750 (+)	
	24 (+) ft	All		
40 mph	**3 – 7 ft**	0 – 249	250 – 999	1,000 (+)
	8 – 11 ft	0 – 299	300 – 1,249	1,250 (+)
	12 – 15 ft	0 – 349	350 – 1,649	1,650 (+)
	16 – 17 ft	0 – 599	600 – 3,199	3,200 (+)
	18 – 19 ft	0 – 799	800 (+)	
	20 (+) ft	All		
30 mph	**2 – 7 ft**	0 – 449	450 – 2,149	2,150 (+)
	8 – 11 ft	0 – 599	600 – 2,999	3,000 (+)
	12 – 13 ft	0 – 799	800 (+)	
	14 (+) ft	All		
20 mph	**2 – 7 ft**	0 – 2,599	2,600 (+)	
	8 – 9 ft	5,000 (+)		
	10 (+) ft			

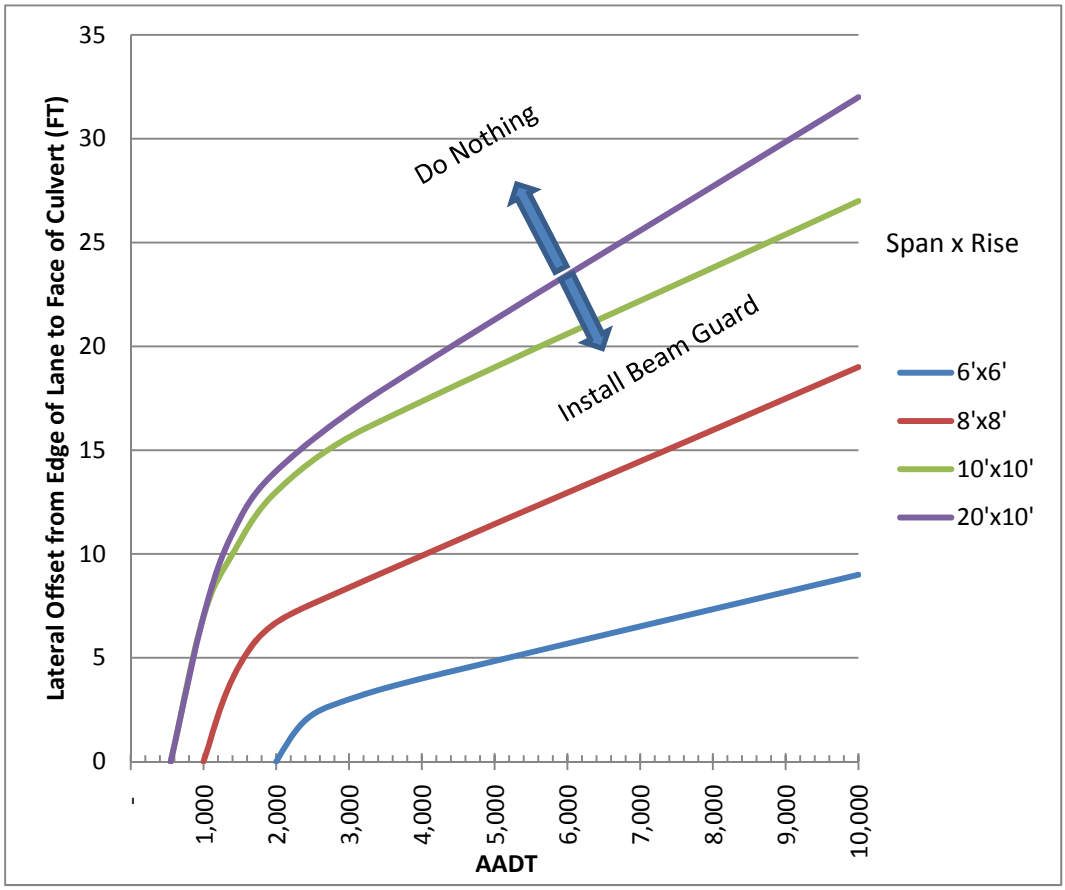
Lateral Offset from Edge of Lane to Face of Culvert (FT)
35
30
25
20
15
10
5
0
-
1,000
2,000
3,000
4,000
5,000
6,000
7,000
8,000
9,000
10,000
AADT
Do Nothing
Install Beam Guard
Span x Rise
6'x6'
8'x8'
10'x10'
20'x10'

Table A.23: Barrier Warrants for Water 2 Feet Deep X 100 Feet Long

Speed	Hazard Offset From Edge of Lane	Adjusted Traffic Factor (ATF)		
		Not Warranted	Possibly Warranted	Warranted
50 mph	**4 – 7 ft**	0 – 249	250 – 1,099	1,100 (+)
	8 – 11 ft	0 – 349	350 – 1,499	1,500 (+)
	12 – 15 ft	0 – 449	450 – 1,999	2,000 (+)
	16 – 19 ft	0 – 2,999	3,000 (+)	
	20 (+) ft	All		
40 mph	**3 – 7 ft**	0 – 249	250 – 1,099	1,100 (+)
	8 – 11 ft	0 – 349	350 – 1,499	1,500 (+)
	12 – 15 ft	0 – 449	450 – 1,999	2,000 (+)
	16 – 17 ft	0 – 2,999	3,000 (+)	
	18 (+) ft	All		
30 mph	**2 – 7 ft**	0 – 599	600 – 3,199	3,200 (+)
	8 – 11 ft	0 – 749	750 (+)	
	12 – 13 ft	0 – 799	800 (+)	
	14 (+) ft	All		
20 mph	**2 – 7 ft**	0 – 3,799	3,800 (+)	
	8 (+)	All		

Table A.7: Barrier Warrants for Fixed Objects 4 Feet X 4 Feet

Speed	Hazard Offset From Edge of Lane	Adjusted Traffic Factor (ATF)		
		Not Warranted	Possibly Warranted	Warranted
50 mph	**4 – 11 ft**	0 – 249	250 – 999	1,000 (+)
	12 – 15 ft.	0 – 349	350 – 1,399	1,400 (+)
	16 – 19 ft	0 – 499	500 – 2,399	2,400 (+)
	20 – 21 ft	0 – 1,199	1,200 (+)	
	22 – 23 ft	0 – 2,999	3,000 (+)	
	24 (+) ft	All		
40 mph	**3 – 7 ft**	0 – 299	300 –1,399	1,400 (+)
	8 – 15 ft	0 – 399	400 – 1,899	1,900 (+)
	16 – 19 ft	0 – 799	800 – 4,999	5,000 (+)
	20 – 23 ft	0 – 1,299	1,300 (+)	
	24 (+) ft	All		
30 mph	**2 – 5 ft**	0 – 799	800 – 4,999	5,000 (+)
	6 – 9 ft	0 – 999	1,000 (+)	
	10 – 11 ft	0 – 1,199	1,200 (+)	
	12 – 13 ft	0 – 1,299	1,300 (+)	
	14 ft (+)	All		
20 mph	**All**	All		

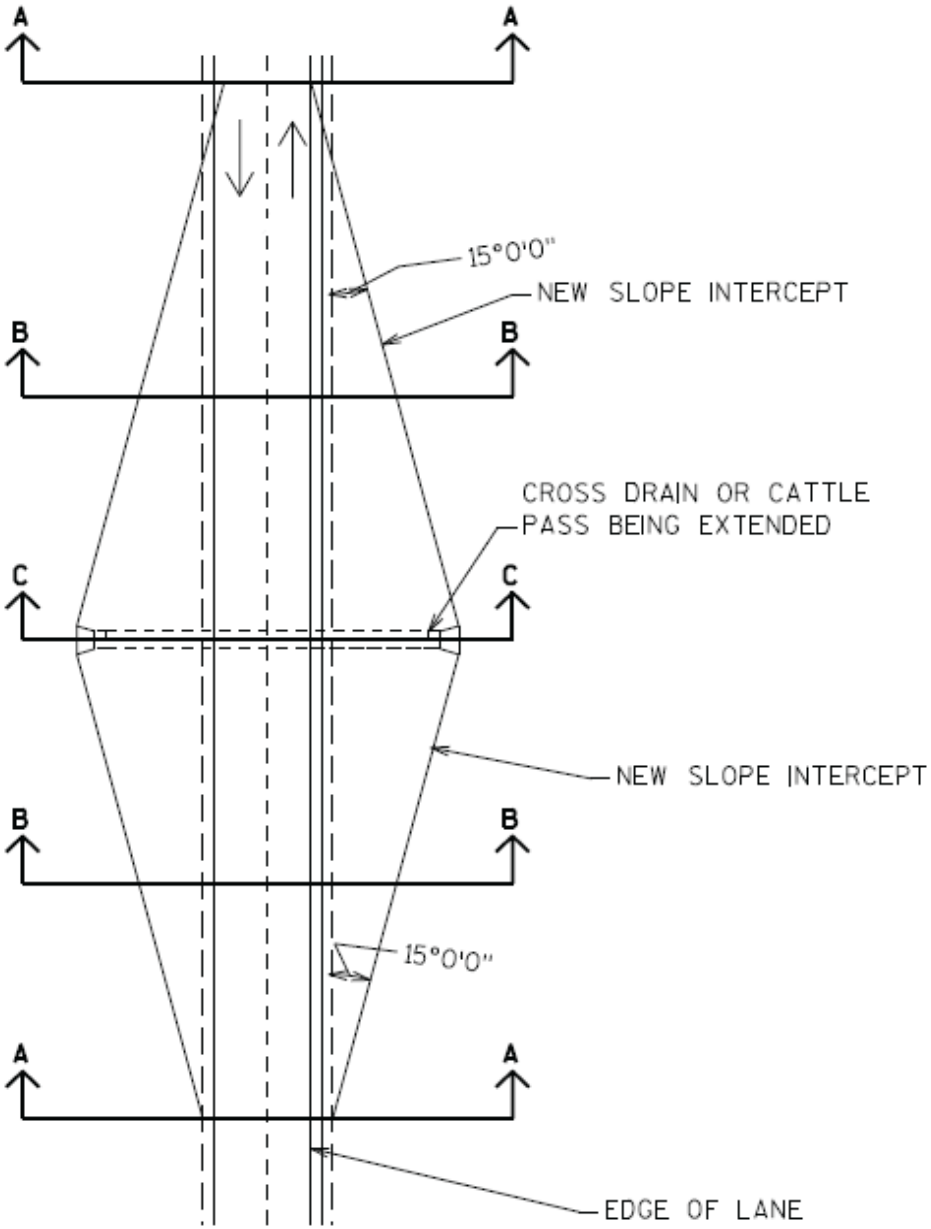
A
A
15°0'0"
NEW SLOPE INTERCEPT
B
B
CROSS DRAIN OR CATTLE
PASS BEING EXTENDED
C
C
NEW SLOPE INTERCEPT
B
B
15°0'0"
A
A
EDGE OF LANE

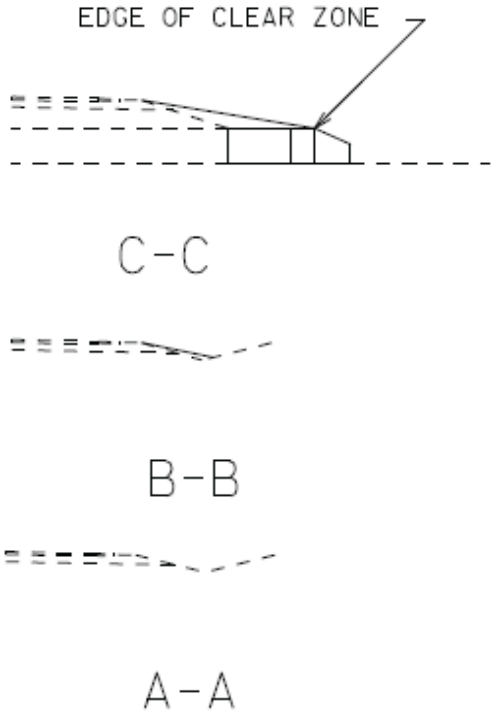
EDGE OF CLEAR ZONE
C-C
B-B
A-A

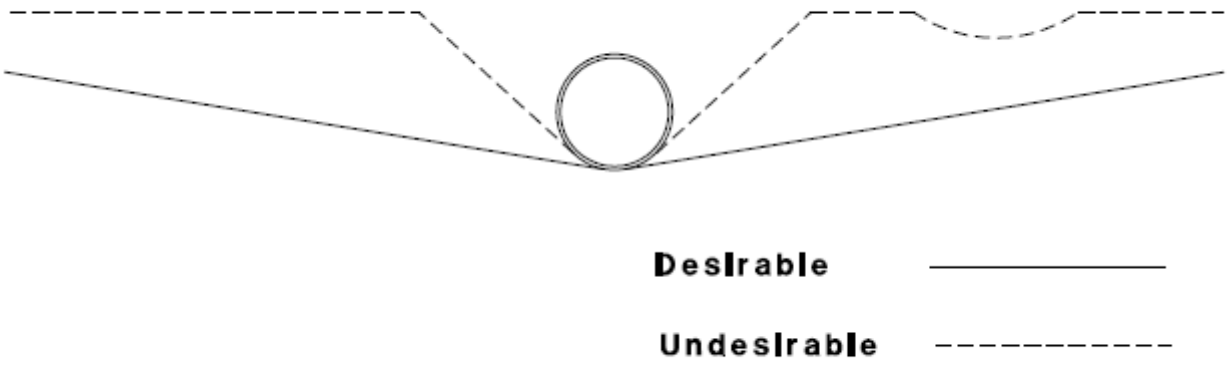

Roadway Ditch Profile leading to Cross Drain

Desirable profile slopes are based on hydraulic/erosion control concerns or Maximum Perpendicular Slope Table (refer to FDM 11-45-2.6.2)

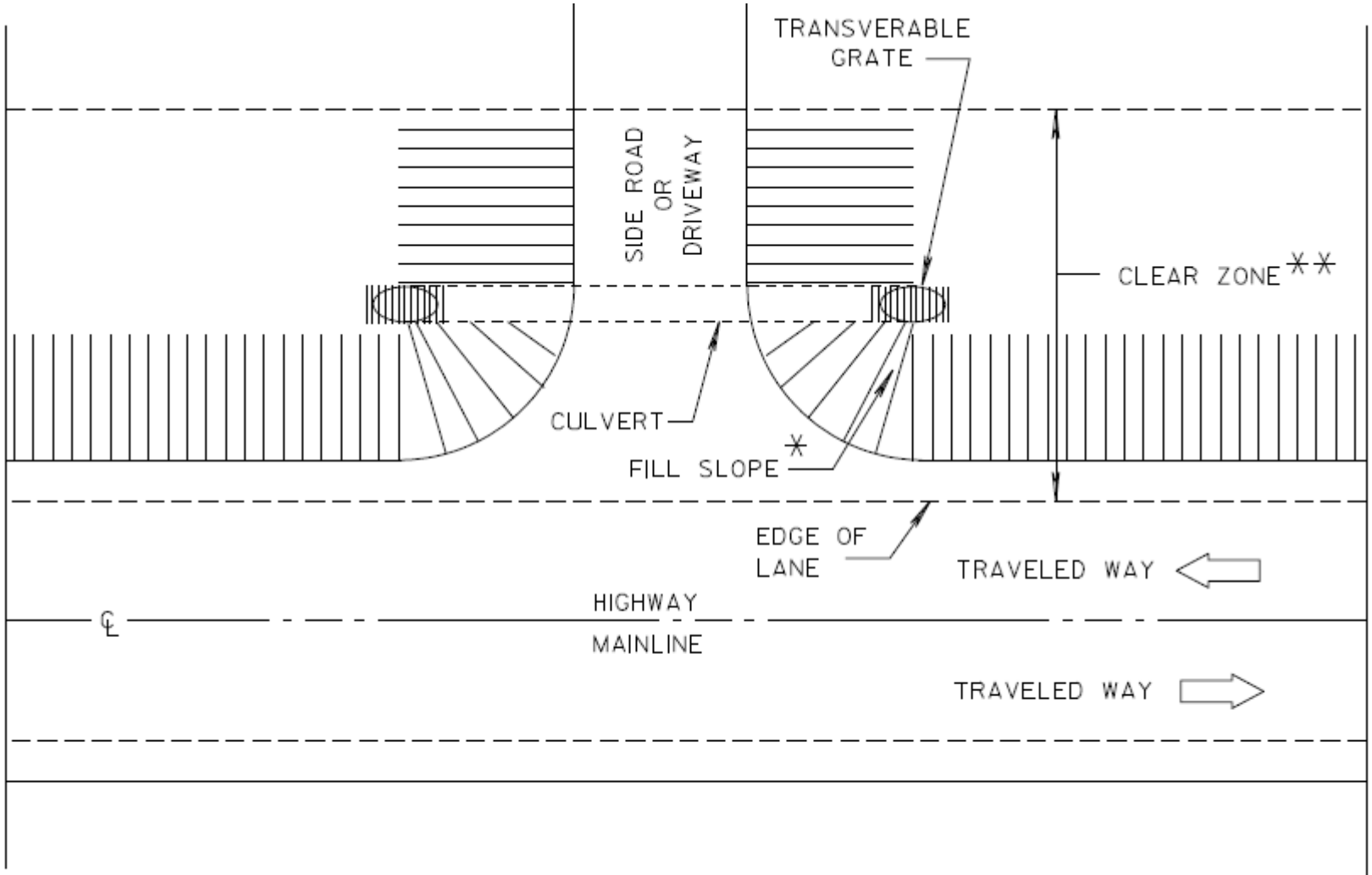

TRANSVERSE SLOPES
ON 2-LANE, 2-WAY ROADWAYS

* Fill slopes may need to vary for blending purposes in select locations. Refer to FDM 11-45-2.6.2 for more guidance on transverse slopes.

** In some spot location existing Right of Way may limit how far from the roadway grading can be provided. Documentation these locations in DSR.

Crash Cushion Selection Tables

Crash Cushion Table Abbreviations:

CCP =	Crash Cushions Permanent (Item 614.0800)
CCPL =	Crash Cushions Permanent Low Maintenance (Item 614.0805)
OS =	Other system should be used (e.g. EAT with thrie beam…) prior to using crash cushion

Table Notes:

1. Charts are based on Guidelines for Crash Cushion Selection MWRSF Report TRP-03-252-12
2. Initial analysis included sand barrel arrays. However, analysis did not indicate that sand barrel arrays were a cost effective alternative.
3. The desirable charts have a benefit cost ratio of 4 or more. The less than desirable charts had a benefit cost ratio of 2 or more.
4. Original charts used Degree of Curve to define curvature. Degree of curve has been converted into a radius value in feet and rounded to the nearest whole number.

Table A - Desirable Crash Cushion Selection Table for Freeway

AADT	Radius (ft)		
	0	**2865**	**1432**
5,000	CCP	CCP	CCP
10,000	CCP	CCP	CCP
25,000	CCP	CCP	CCP
50,000	CCP	CCP	CCP
75,000	CCP	CCP	CCP
100,000	CCPL	CCPL	CCPL
	All		
	Offset (ft)		

Table B - Desirable Crash Cushion Selection Table for Divided Rural Arterials or Expressways

AADT	Radius (ft)					
	0	1910	955	0	1910	955
1,000	CCP	CCP	CCP	OS	OS	OS
5,000	CCP	CCP	CCP	CCP	CCP	CCP
10,000	CCP	CCP	CCP	CCP	CCP	CCP
20,000	CCP	CCP	CCP	CCP	CCP	CCP
30,000	CCP	CCP	CCP	CCP	CCP	CCP
	<15 ft			≥15 ft		
	Offset (ft)					

Table C - Desirable Crash Cushion Selection Table for Undivided Rural Arterials

AADT	Radius (ft)					
	0	1910	955	0	1910	955
1,000	OS	OS	OS	OS	OS	OS
5,000	CCP	CCP	CCP	OS	OS	OS
10,000	CCP	CCP	CCP	OS	OS	OS
20,000	CCP	CCP	CCP	OS	OS	OS
30,000	CCP	CCP	CCP	OS	OS	OS
	<20 ft			≥20 ft		
	Offset (ft)					

Table D - Desirable Crash Cushion Selection Table for Undivided Rural Local

AADT	Radius (ft)								
	0	1146	573	0	1146	573	0	1146	573
200	OS	OS	OS	OS	OS	OS	OS	OS	OS
500	OS	OS	OS	OS	OS	OS	OS	OS	OS
1,000	OS	CCP	CCP	OS	OS	OS	OS	OS	OS
3,000	CCP	CCP	CCP	CCP	CCP	CCP	OS	OS	OS
	≤10 ft			≤20 ft			≤35 ft		
	Offset (ft)								

Table E - Less than Desirable Crash Cushion Selection Table for Freeway

AADT	Radius (ft)		
	0	2865	1432
5,000	CCP	CCP	CCP
10,000	CCP	CCP	CCP
25,000	CCP	CCP	CCP
50,000	CCP	CCP	CCP
75,000	CCPL	CCPL	CCPL
100,000	CCPL	CCPL	CCPL
	All Offset (ft)		

Table F - Less than Desirable Crash Cushion Selection Table for Divided Rural Arterials or Expressways

AADT	Radius (ft)		
	0	1910	955
1,000	CCP	CCP	CCP
5,000	CCP	CCP	CCP
10,000	CCP	CCP	CCP
20,000	CCPL	CCPL	CCPL
30,000	CCPL	CCPL	CCPL
	All		
	Offset (ft)		

Table G - Less than Desirable Crash Cushion Selection Table for Undivided Rural Arterials

AADT	Radius (ft)											
	0	1910	955	0	1910	955	0	1910	955	0	1910	955
1,000	OS	OS	OS	OS	OS	OS	OS	OS	OS	OS	OS	OS
5,000	CCP	CCP	CCP	CCP	CCP	CCP	CCP	CCP	CCP	OS	OS	OS
10,000	CCP	CCP	CCP	CCP	CCP	CCP	CCP	CCP	CCP	OS	OS	OS
20,000	CCP	CCP	CCP	CCP	CCP	CCP	CCP	CCP	CCP	OS	OS	OS
30,000	CCP	CCP	CCPL	CCP	CCP	CCP	CCP	CCP	CCP	OS	OS	OS
	5 ft			10 ft			15 ft			≥20		
	Offset (ft)											

Table H - Less than Desirable Crash Cushion Selection Table for Rural Local

AADT	Radius (ft)								
	0	1146	573	0	1146	573	0	1146	573
200	OS	OS	OS	OS	OS	OS	OS	OS	OS
500	OS	OS	CCP	OS	OS	OS	OS	OS	OS
1,000	CCP	CCP	CCP	CCP	CCP	CCP	OS	OS	OS
3,000	CCP	CCP	CCP	CCP	CCP	CCP	OS	OS	OS
	≤5 ft			≤20 ft			≤35 ft		
	Offset (ft)								

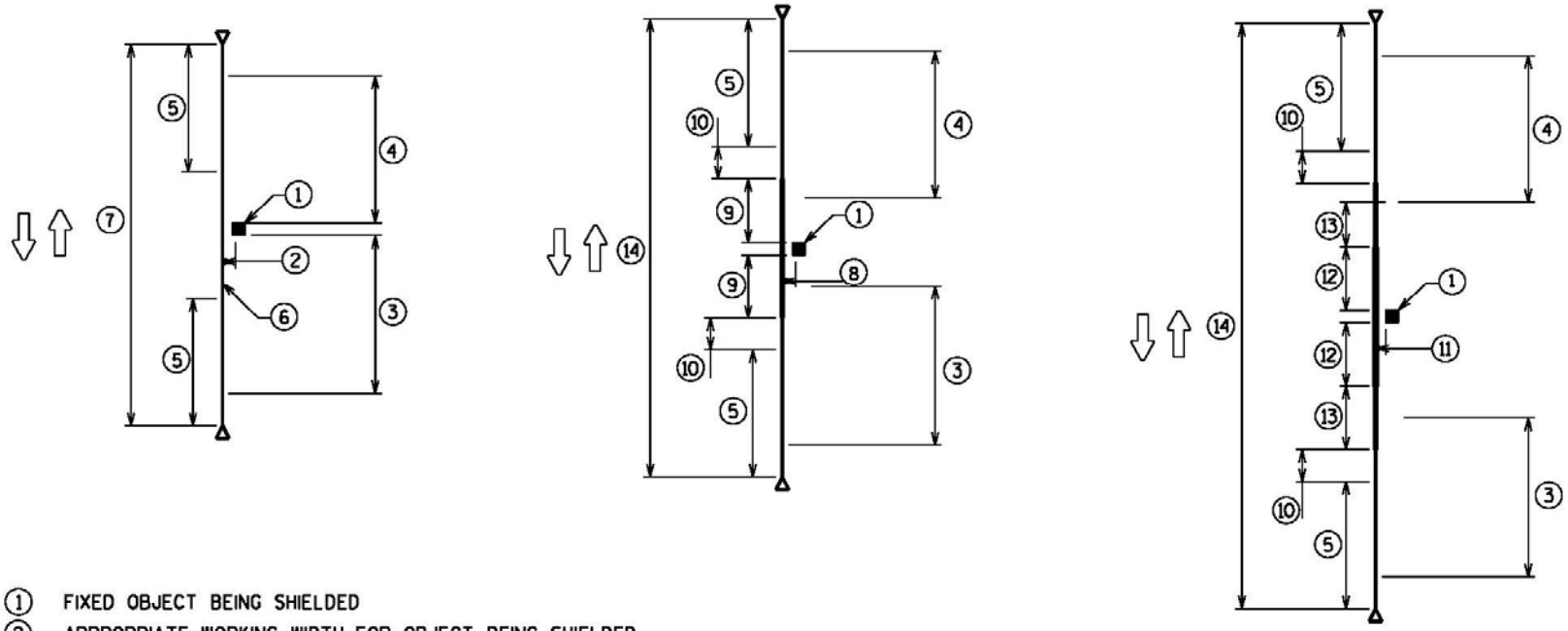

1. FIXED OBJECT BEING SHIELDED
2. APPROPRIATE WORKING WIDTH FOR OBJECT BEING SHIELDED
3. APPROACH LENGTH OF NEED (LON)
4. FAR SIDE LENGTH OF NEED (LON)
5. EAT LENGTH (SEE OTHER SECTIONS OF 11-45-2)
6. STANDARD POST SPACING FOR BEAM GUARD
7. TOTAL BARRIER SYSTEM LENGTH FOR NORMAL APPLICATIONS
8. HAZARD WITHIN THE WORKING WIDTH OF STANDARD BEAM GUARD
9. 25' OF HALF POST SPACING PRIOR HAZARD FOR BOTH DIRECTIONS OF TRAVEL
10. MIN. OF 12.5' OF STANDARD POST SPACING BETWEEN END OF TERMINAL AND START OF HALF POST SPACING.
11. BEAM GUARD QUARTER POST SPACING IS REQUIRED BECAUSE OF WORKING WIDTH OF NORMAL BEAM GUARD AND HALF POST SPACING BEAM GUARD IS TOO LARGE
12. 25' OF QUARTER POST SPACING PRIOR TO HAZARD FOR BOTH DIRECTIONS OF TRAVEL
13. 25' OF HALF POST SPACING PRIOR TO QUARTER POST SPACING
14. OVERALL LENGTH OF BARRIER SYSTEM MAY CHANGE DUE TO THE NEED FOR SMALLER WORKING WIDTHS

DRAWINGS NOT TO SCALE
DRAWINGS ARE INTENDED TO SHOW GENERAL ROADSIDE DESIGN CONCEPTS.
DESIGNERS ARE RESPONSIBLE FOR PROVIDING INDIVIDUAL CONSTRUCTION DETAILS FOR THEIR PROJECTS.

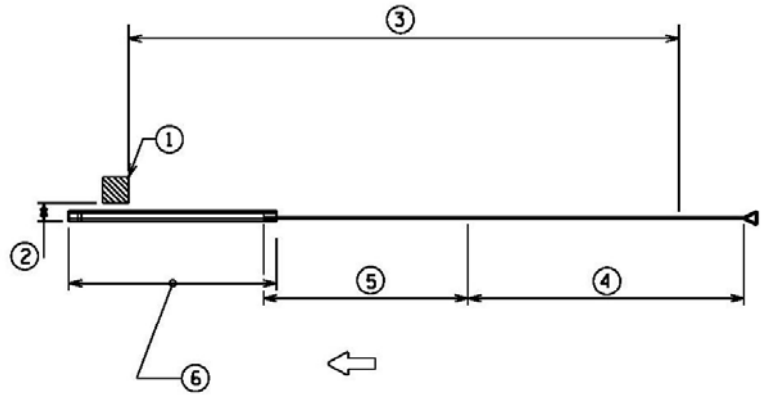

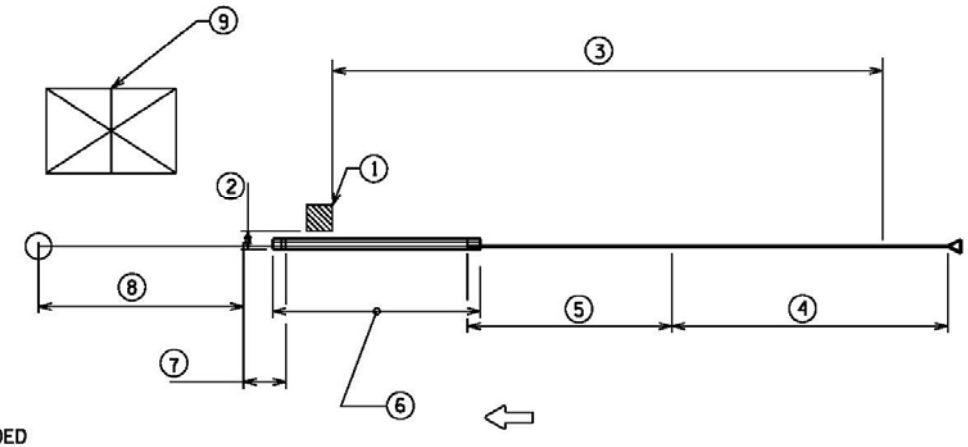

1. FIXED OBJECT BEING SHIELDED
2. APPROPRIATE WORKING WIDTH FOR OBJECT BEING SHIELDED
3. APPROACH LENGTH OF NEED (LON)
4. EAT LENGTH (SEE OTHER SECTIONS OF 11-45-2)
5. APPROACH TRANSITION TO RIGID BARRIER
6. SINGLE SLOPE CONCRETE BARRIER WITH APPROPRIATE ANCHORAGES
7. DOWN STREAM THRIE BEAM TRANSITION
8. TYPE 2 BEAM GUARD TERMINAL
9. FIXED OBJECT HAZARD THAT IS OUTSIDE GATING AREA OF TYPE 2 END TERMINAL

DRAWINGS NOT TO SCALE
DRAWINGS ARE INTENDED TO SHOW GENERAL ROADSIDE DESIGN CONCEPTS.
DESIGNERS ARE RESPONSIBLE FOR PROVIDING INDIVIDUAL CONSTRUCTION DETAILS FOR THEIR PROJECTS.

General Barrier Type	Sub-type of Barrier	Bid Item		Working Width		Usage
		Number	Name	Measure from	Distance FT	
Cable barrier	Low -Tension	NA	NA	Impact face of cable	12	Not installed any more
	High-Tension	Special Provision	Special Provision and Drawings	Impact face of cable	See manufacturer's data	Installations limited coordinate with BPD
Beam guard	Class A	614.0305	Steel Plate Beam Guard Class A	Impact face of beam	4.25	2' of flat grading behind post
		614.0305	Steel Plate Beam Guard Class A	Impact face of beam	3.75	Half post spacing with 2' of flat ground behind post
		614.0305	Steel Plate Beam Guard Class A	Impact face of beam	3.33	Quarter post spacing with 2' of flat ground behind posts
		614.0340	Steel Plate Beam Guard Over Low-Fill Culverts Class A	Impact face of beam	5	Long span application
		614.0510	Guardrail Stiffened NW	Impact face of beam	5.25	Standard post spacing with nested rail and curb and gutter 2' of flat ground behind post
		614.0515	Guardrail Stiffened LHW	Impact face of beam	3.75	Half post spacing with longer posts when 2.5:1 break point off the back of post
	MGS	614.230	MGS Guardrail 3	Impact face of beam	5.00	Typically installed 2' of flat grading behind post
		614.230	MGS Guardrail 3	Impact face of beam	9.00	5:1 flare 2' of flat grading behind post
		614.230	MGS Guardrail 3	Impact face of beam	8.33	7:1 flare 2' of flat grading behind post
		614.230	MGS Guardrail 3	Impact face of beam	6.66	13:1 flare 2' of flat grading behind post
		614.230	MGS Guardrail 3	Impact face of beam	5.50	Typically installed MGS with 6" curb and 2' of flat ground behind post
		614.230	MGS Guardrail 3	Impact face of beam	7.50	MGS with normal post spacing and normal post depth 2.5:1 break point at back of post
		614.231	MGS Guardrail 3 HS	Impact face of beam	4.50	Typically installed half post spacing with 2' of flat ground behind post
		614.232	MGS Guardrail 3 QS	Impact face of beam	3.83	Typically installed quarter post spacing with 2' of flat ground behind the post
		614.233	MGS Guardrail 3 K	Impact face of beam	5.50	Typically installed half post spacing with longer post with 2.5:1 break point off the back of post
		614.234	MGS Guardrail 3 L	Impact face of beam	7.83	Typically installed long span application
Thrie Beam Barrier	Single Faced	614.023	Steel Thrie Beam	Impact face of beam	4.1	Typically not installed unless with thrie beam bullnose
		NA	Special Provision and Drawings	Impact face of beam	4.5	Typical not installed. Requires BPD approval Steel post and block design
		NA	Special Provision and Drawings	Impact face of beam	3.25	Typical not installed. Requires BPD approval Half post spacing
		NA	Special Provision and Drawings	Impact face of beam	3	Typical not installed. Requires BPD approval quarter post spacing
	Double Faced	NA	Special Provision and Drawings	Impact face of beam	5.00	Typical not installed. Requires BPD approval
Concrete Barrier Permanent	Safety Shape	603.0105	Concrete Barrier Single-Faced 32-Inch	Toe of barrier on impact side	2.5	Typical not installed unless for spot repairs or extending existing safety shape barrier
		603.0205	Concrete Barrier Double-Faced 32-Inch	Toe of barrier on impact side	2.5	
	Single Slope	603.1132	Concrete Barrier Type S32	Toe of barrier on impact side	2.25	Typically installed
		603.1232	Concrete Barrier Type S32A	Toe of barrier on impact side	2.25	
		603.1332	Concrete Barrier Type S32B	Toe of barrier on impact side	2.25	
		603.1136	Concrete Barrier Type S36	Toe of barrier on impact side	2	
		603.1236	Concrete Barrier Type S36A	Toe of barrier on impact side	2	
		603.1336	Concrete Barrier Type S36B	Toe of barrier on impact side	2	
		603.1436	Concrete Barrier Type S36C	Toe of barrier on impact side	2	
		603.1142	Concrete Barrier Type S42	Toe of barrier on impact side	2	
		603.1242	Concrete Barrier Type S42A	Toe of barrier on impact side	2	
		603.1342	Concrete Barrier Type S42B	Toe of barrier on impact side	2	
		603.1442	Concrete Barrier Type S42C	Toe of barrier on impact side	2	
		603.1156	Concrete Barrier Type S56	Toe of barrier on impact side	2	
		603.1256	Concrete Barrier Type S56A	Toe of barrier on impact side	2	
		603.1356	Concrete Barrier Type S56B	Toe of barrier on impact side	2	
		603.1456	Concrete Barrier Type S56C	Toe of barrier on impact side	2	
	Vertical Shape	NA	Special Provision and Drawings	Toe of barrier on impact side	2	Typical not installed. Requires BPD Approval
	Low Speed Permanent	NA	Special Provision and Drawings	point of beak	1.5	Typical not installed. Requires BPD Approval

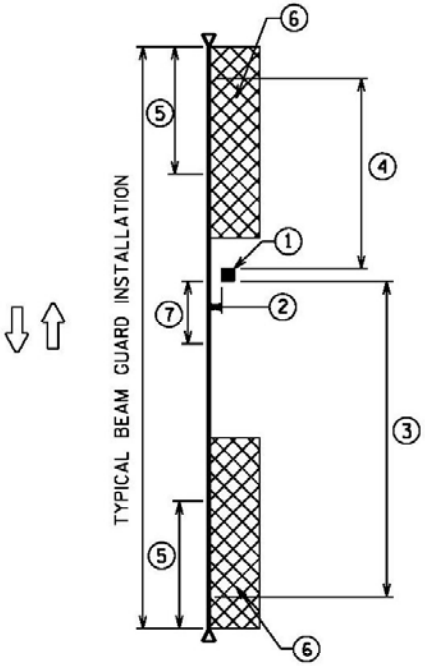

ACCEPTABLE

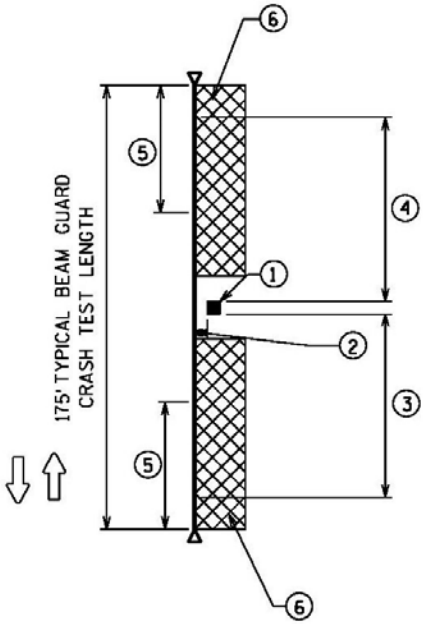

ACCEPTABLE
REQUIRES DOCUMENT IN DSR

1. FIXED OBJECT BEING SHIELDED
2. APPROPRIATE WORKING WIDTH FOR OBJECT BEING SHIELDED
3. APPROACH LENGTH OF NEED (LON)
4. FAR SIDE LENGTH OF NEED (LON)
5. EAT LENGTH (SEE OTHER SECTIONS OF 11-45-2)
6. 75' BY 20' RECOVERY AREA (SEE OTHER SECTIONS OF 11-45-2)
7. IF BEAM GUARD IS FLARED, A MINIMUM OF 25' OF TANGENT BEAM GUARD REQUIRED PRIOR TO HAZARD.

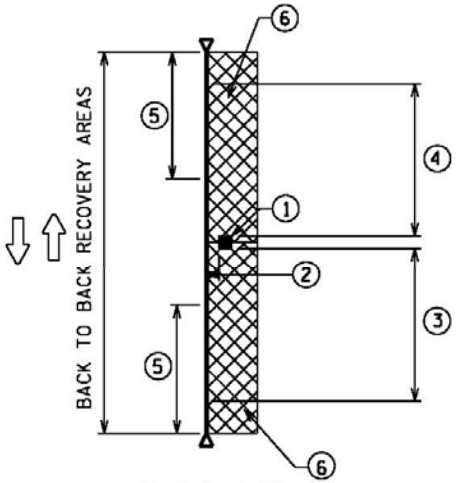

MINIMUM (AVOID)
REQUIRES DOCUMENTATION IN DSR

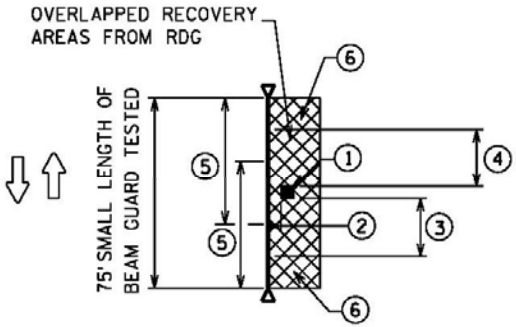

NOT ACCEPTABLE WITH BEAM GUARD TERMINALS

DRAWINGS NOT TO SCALE
DRAWINGS ARE INTENDED TO SHOW GENERAL ROADSIDE DESIGN CONCEPTS.
DESIGNERS ARE RESPONSIBLE FOR PROVIDING INDIVIDUAL CONSTRUCTION DETAILS FOR THEIR PROJECTS.

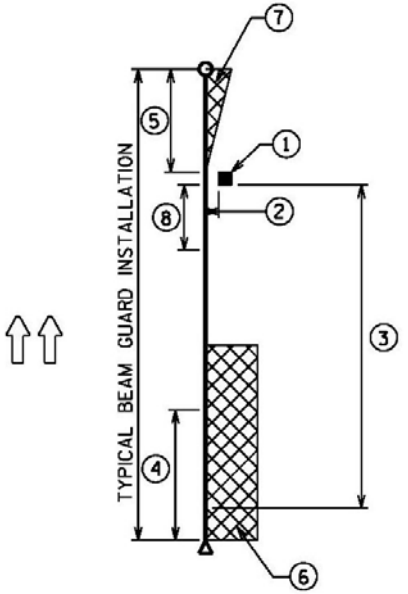

ACCEPTABLE

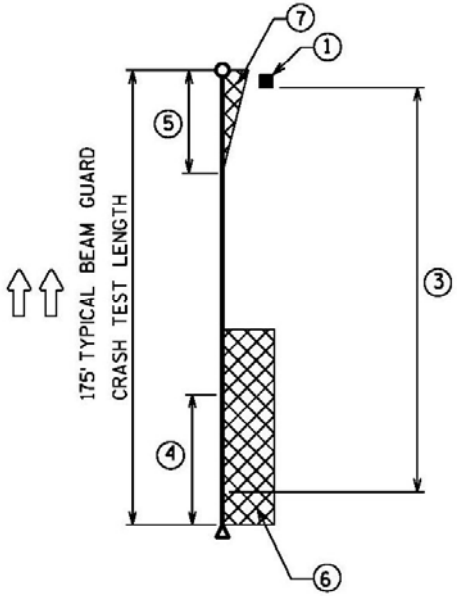

ACCEPTABLE
REQUIRES DOCUMENTATION IN DSR

1. FIXED OBJECT BEING SHIELDED
2. APPROPRIATE WORKING WIDTH FOR OBJECT BEING SHIELDED
3. APPROACH LENGTH OF NEED (LON)
4. EAT LENGTH (SEE OTHER SECTIONS OF 11-45-2)
5. TYPE 2 END TERMINAL (SEE OTHER SECTIONS OF 11-45-2)
6. 75' BY 20' RECOVERY AREA (SEE OTHER SECTIONS OF 11-45-2)
7. GATING AREA OF TYPE 2 END TERMINAL (SEE OTHER SECTIONS OF 11-45-2)
8. IF BEAM GUARD IS FLARED, A MINIMUM OF 25' OF TANGENT BEAM GUARD REQUIRED PRIOR TO HAZARD.

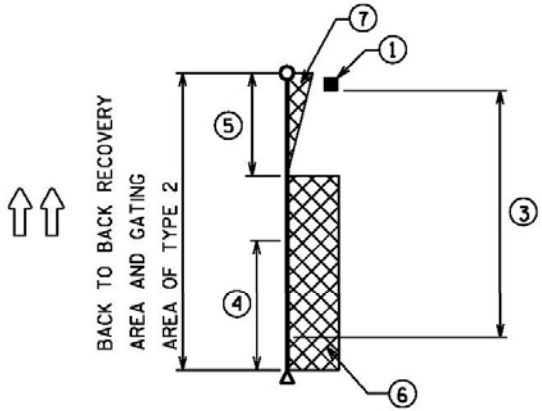

MINIMUM (AVOID)
REQUIRES DOCUMENTATION IN DSR

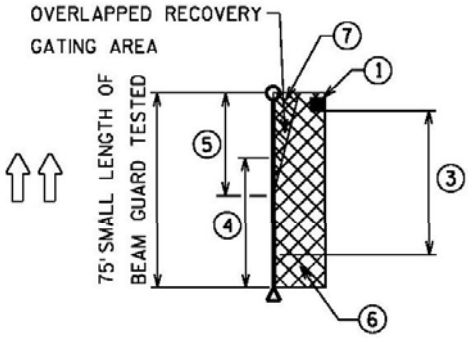

NOT ACCEPTABLE WITH BEAM GUARD TERMINALS

DRAWINGS NOT TO SCALE
DRAWINGS ARE INTENDED TO SHOW GENERAL ROADSIDE DESIGN CONCEPTS.
DESIGNERS ARE RESPONSIBLE FOR PROVIDING INDIVIDUAL CONSTRUCTION DETAILS FOR THEIR PROJECTS.

Barrier		Recommended Minimum Barrier Length (FT)	Comments
Cable Barrier		300	Excludes lengths of cable barrier anchorages
Beam Guard		175	Includes beam guard end treatments. On bidirectional roadways, avoid beam guard installations that are 150 ft or shorter. On unidirectional roadways, avoid beam guard installations that are shorter than 115 ft or shorter.*
Concrete Barrier Safety Shape	**Single Sided**	150	Includes concrete anchor section
	Double Sided (non Retaining wall)	150	Includes concrete anchor section
	Median Retaining Wall	Structural review required to minimize movement of barrier during impact and overturning.	
Concrete Barrier Single Slope	**Regular**	40	Includes two Concrete Barrier Single Slope Anchorages (see SDD 14B33) or two end anchors (see SDD 14B32)
	Median Retaining Wall	Structural review required to minimize movement of barrier during impact and overturning.	
	Short Section of Wall	Bidirectional 31	Includes two Concrete Barrier Single Slope Anchorages (SDD 14B33)
		Unidirectional 21	Includes one Concrete Barrier Single Slope Anchorage (SDD 14B33)
		10	Short section of barrier installed between tightly spaced rigid hazards (e.g. bridge piers…)
	Roadside Retaining Wall	Structural review required to minimize movement of barrier during impact and overturning..	

* For this length of barrier, proper placement of barrier relative to hazard is critical.

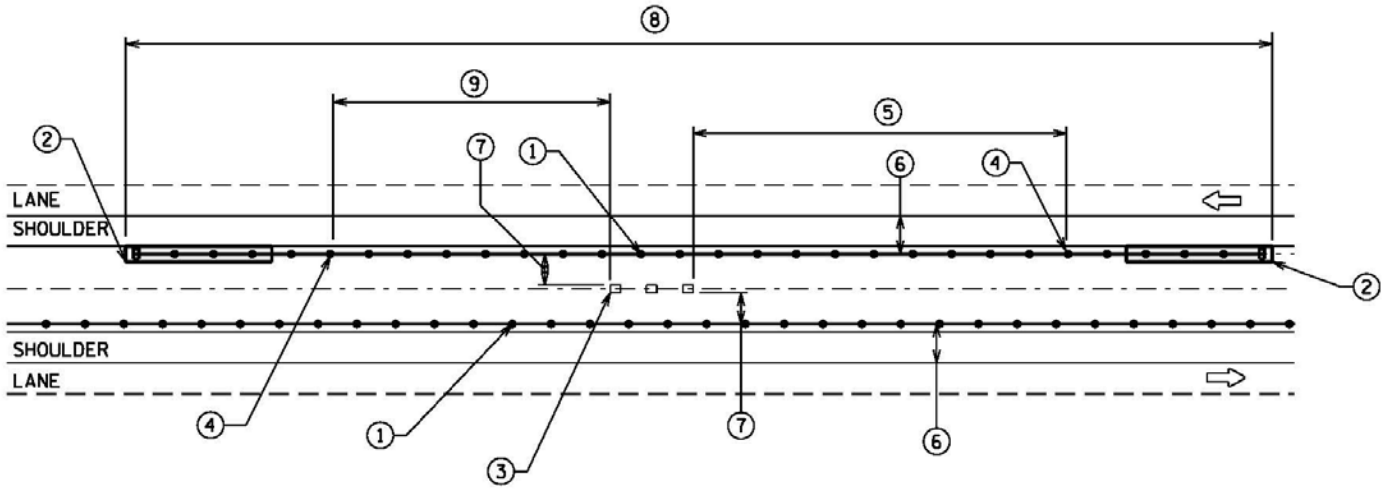

PIERS ARE NOT WITHIN WORKING WIDTH OF CABLE BARRIER

CABLE BARRIER IS PROVIDING VEHICLE PROTECTION FOR PIER

1. CABLE BARRIER
2. CABLE BARRIER END TERMINAL
3. PIER OR OTHER FIXED OBJECT
4. LENGTH OF NEED POINT OF CABLE BARRIER END TERMINAL
5. ADEQUATE APPROACH LENGTH OF NEED TO SHIELD PIERS
6. WORKING WIDTH OF CABLE BARRIER IS AT THE EDGE OF LANE (LESS DESIRABLE LOCATION TO MEASURE WORKING WIDTH BEING SHOWN)
7. PIERS ARE BEYOND WORKING WIDTH
8. PROVIDE MINIMUM LENGTH OF BARRIER
9. MINIMUM 100 FEET

DRAWINGS NOT TO SCALE
DRAWINGS ARE INTENDED TO SHOW GENERAL ROADSIDE DESIGN CONCEPTS AND ARE NOT INTENDED TO BE INSERTED INTO PLANS.
DESIGNERS ARE RESPONSIBLE FOR PROVIDING INDIVIDUAL CONSTRUCTION DETAILS FOR THEIR PROJECTS.

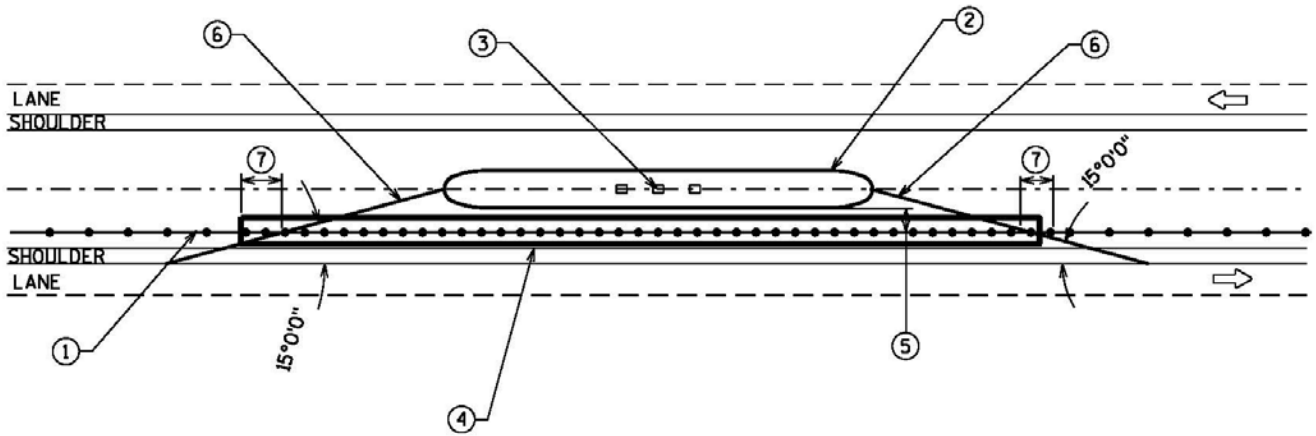

REDUCED CABLE BARRIER POST SPACING BY PIERS

BULLNOSE IS PROVIDING VEHICLE PROTECTION FOR PIER FOR ONE DIRECTION OF TRAVEL

1. CABLE BARRIER
2. THRIE BEAM BULLNOSE
3. PIER OR OTHER FIXED OBJECT
4. AREA WITH CABLE BARRIER WITH REDUCED POST SPACING (SHOW WORKING WIDTH IN PLAN)
5. WORKING WIDTH OF CABLE IS REDUCED TO MINIMIZE CABLE BARRIER AND THRIE BEAM BULLNOSE INTERACTION. SEE MANUFACTURER'S INFORMATION FOR MINIMUM WORKING WIDTH INFORMATION.
6. REDUCED POST SPACING LAYOUT LINE
7. PROVIDE REDUCED POST SPACING AT LEAST 1 SPACE BEYOND SPACING LAYOUT LINE

DRAWINGS NOT TO SCALE

DRAWINGS ARE INTENDED TO SHOW GENERAL ROADSIDE DESIGN CONCEPTS AND ARE NOT INTENDED TO BE INSERTED INTO PLANS.

DESIGNERS ARE RESPONSIBLE FOR PROVIDING INDIVIDUAL CONSTRUCTION DETAILS FOR THEIR PROJECTS.

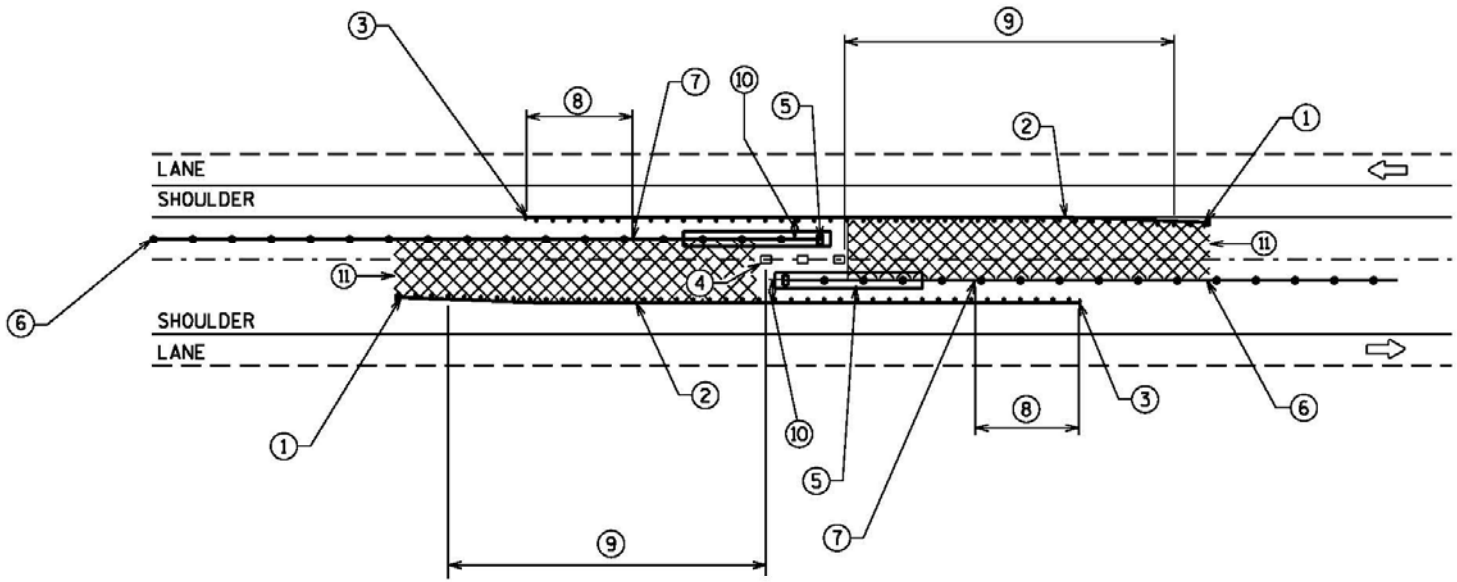

PIERS ARE WITHIN WORKING WIDTH OF CABLE BARRIER

BEAM GUARD IS PROVIDING VEHICLE PROTECTION FOR PIER AND SHIELDING CABLE BARRIER END TERMINALS

1. EAT
2. BEAM GUARD
3. TYPE 2 END TREATMENT
4. PIER OR OTHER FIXED OBJECT
5. CABLE BARRIER END TERMINAL
6. CABLE BARRIER LINE POSTS
7. LENGTH OF NEED POINT FOR CABLE BARRIER END TERMINAL
8. MINIMUM 39.5 FEET OF BEAM GUARD BEYOND LENGTH OF NEED POINT OF CABLE BARRIER END TERMINAL
9. ADEQUATE APPROACH LENGTH OF NEED TO SHIELD PIERS
10. BEAM GUARD WORKING WIDTH
11. CABLE BARRIER IS PLACED TO MINIMIZE REBOUNDING OFF OF CABLE BARRIER AND INTO THE BACKSIDE OF BEAM GUARD

DRAWINGS NOT TO SCALE

DRAWINGS ARE INTENDED TO SHOW GENERAL ROADSIDE DESIGN CONCEPTS AND ARE NOT INTENDED TO BE INSERTED INTO PLANS.

DESIGNERS ARE RESPONSIBLE FOR PROVIDING INDIVIDUAL CONSTRUCTION DETAILS FOR THEIR PROJECTS.

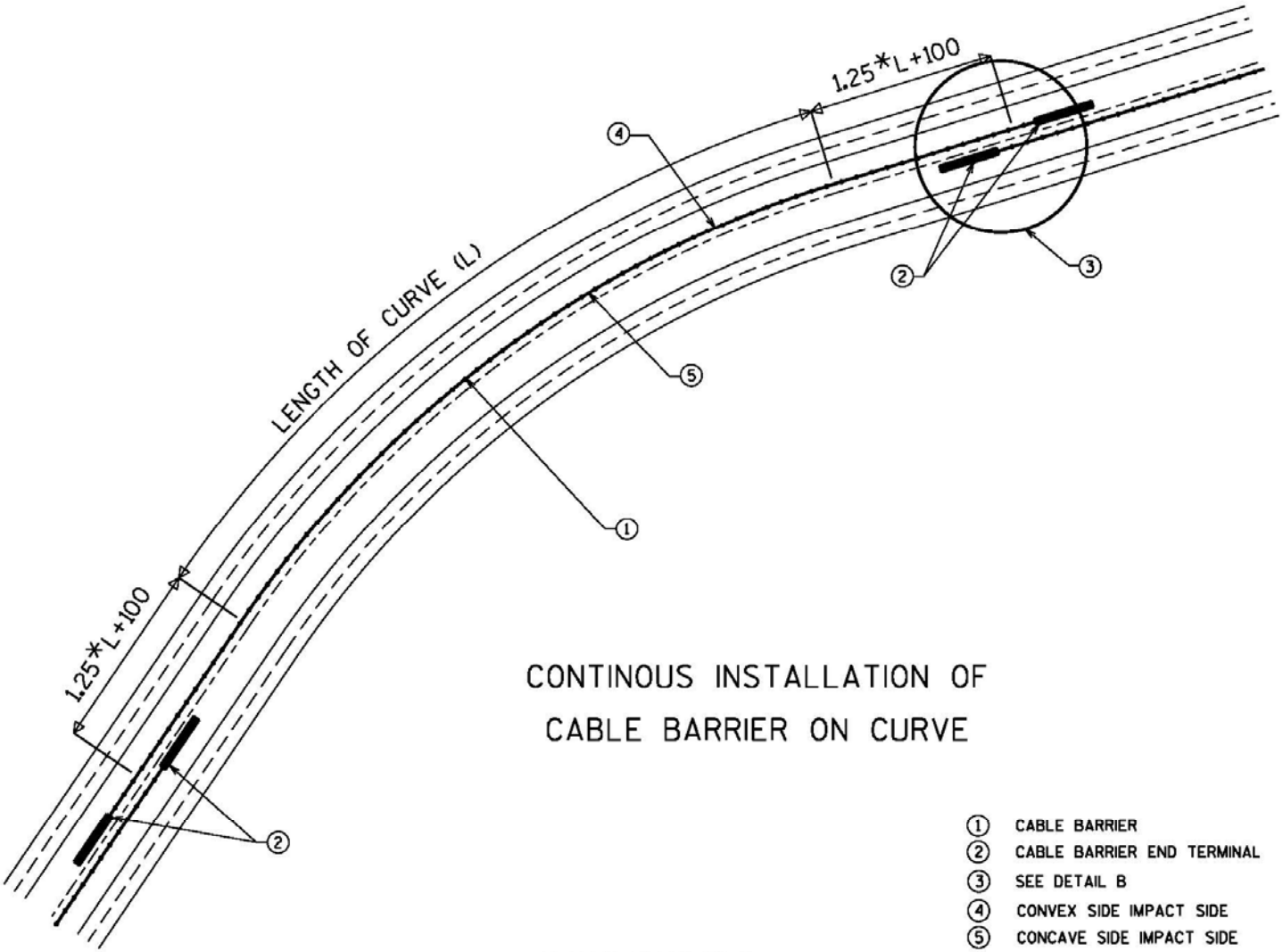

CONTINOUS INSTALLATION OF
CABLE BARRIER ON CURVE

1. CABLE BARRIER
2. CABLE BARRIER END TERMINAL
3. SEE DETAIL B
4. CONVEX SIDE IMPACT SIDE
5. CONCAVE SIDE IMPACT SIDE

DRAWINGS NOT TO SCALE
DRAWINGS ARE INTENDED TO SHOW GENERAL ROADSIDE DESIGN CONCEPTS AND ARE NOT INTENDED TO BE INSERTED INTO PLANS.
DESIGNERS ARE RESPONSIBLE FOR PROVIDING INDIVIDUAL CONSTRUCTION DETAILS FOR THEIR PROJECTS.

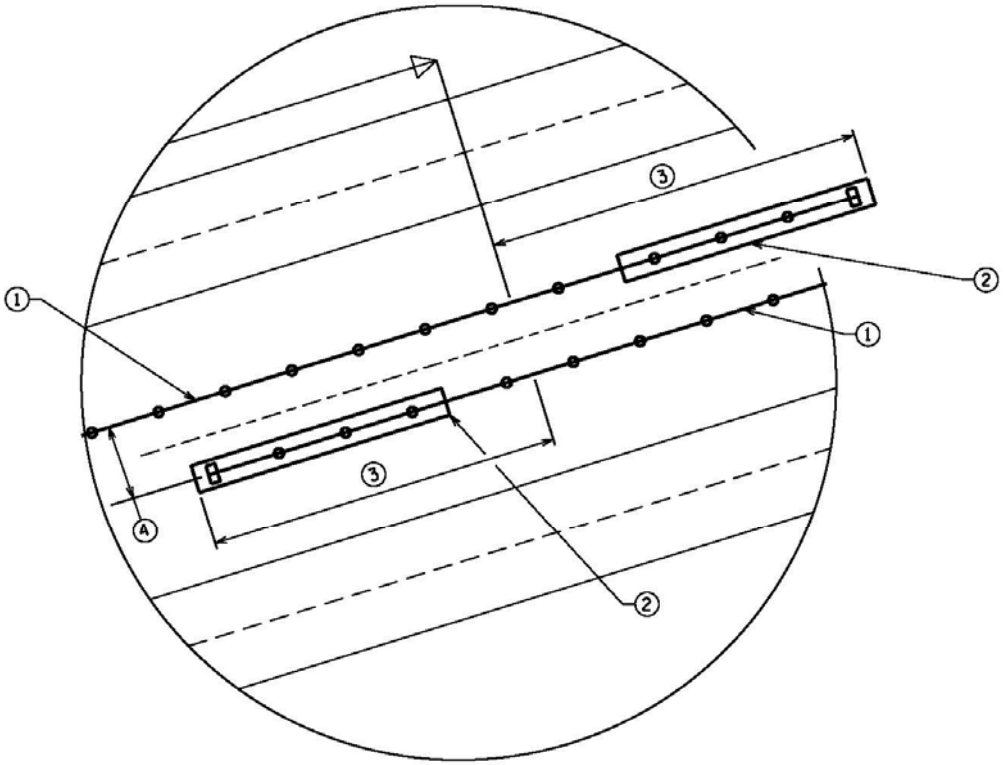

DETAIL B

1. CABLE BARRIER
2. CABLE BARRIER END TERMINAL
3. LENGTH OF NEED POINT OF CABLE BARRIER END TERMINAL
4. ADEQUATE WORKING WIDTH BETWEEN CABLE BARRIERS

DRAWINGS NOT TO SCALE
DRAWINGS ARE INTENDED TO SHOW GENERAL ROADSIDE DESIGN CONCEPTS AND ARE NOT INTENDED TO BE INSERTED INTO PLANS.
DESIGNERS ARE RESPONSIBLE FOR PROVIDING INDIVIDUAL CONSTRUCTION DETAILS FOR THEIR PROJECTS.

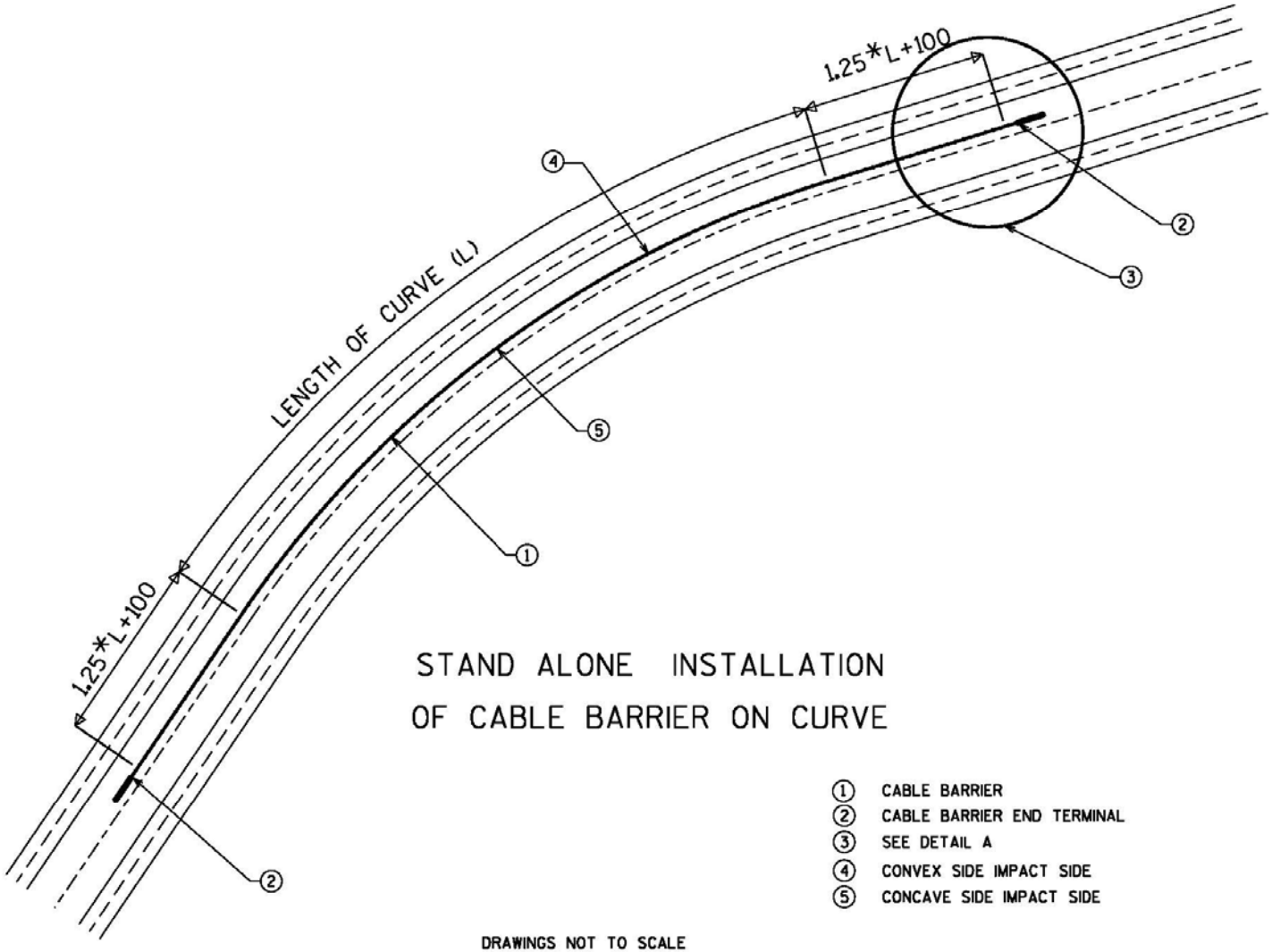

STAND ALONE INSTALLATION
OF CABLE BARRIER ON CURVE

1. CABLE BARRIER
2. CABLE BARRIER END TERMINAL
3. SEE DETAIL A
4. CONVEX SIDE IMPACT SIDE
5. CONCAVE SIDE IMPACT SIDE

DRAWINGS NOT TO SCALE
DRAWINGS ARE INTENDED TO SHOW GENERAL ROADSIDE DESIGN CONCEPTS AND ARE NOT INTENDED TO BE INSERTED INTO PLANS.
DESIGNERS ARE RESPONSIBLE FOR PROVIDING INDIVIDUAL CONSTRUCTION DETAILS FOR THEIR PROJECTS.

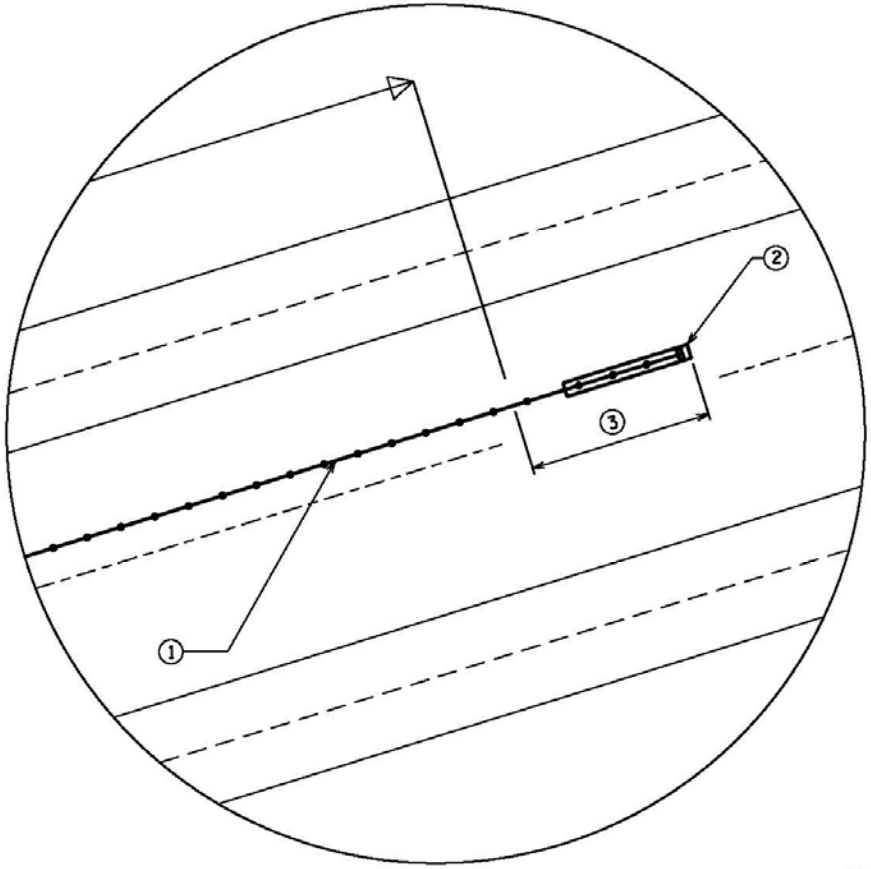

DETAIL A

1. CABLE BARRIER
2. CABLE BARRIER END TERMINAL
3. LENGTH OF NEED POINT OF CABLE BARRIER END TERMINAL

DRAWINGS NOT TO SCALE
DRAWINGS ARE INTENDED TO SHOW GENERAL ROADSIDE DESIGN CONCEPTS AND ARE NOT INTENDED TO BE INSERTED INTO PLANS.
DESIGNERS ARE RESPONSIBLE FOR PROVIDING INDIVIDUAL CONSTRUCTION DETAILS FOR THEIR PROJECTS.

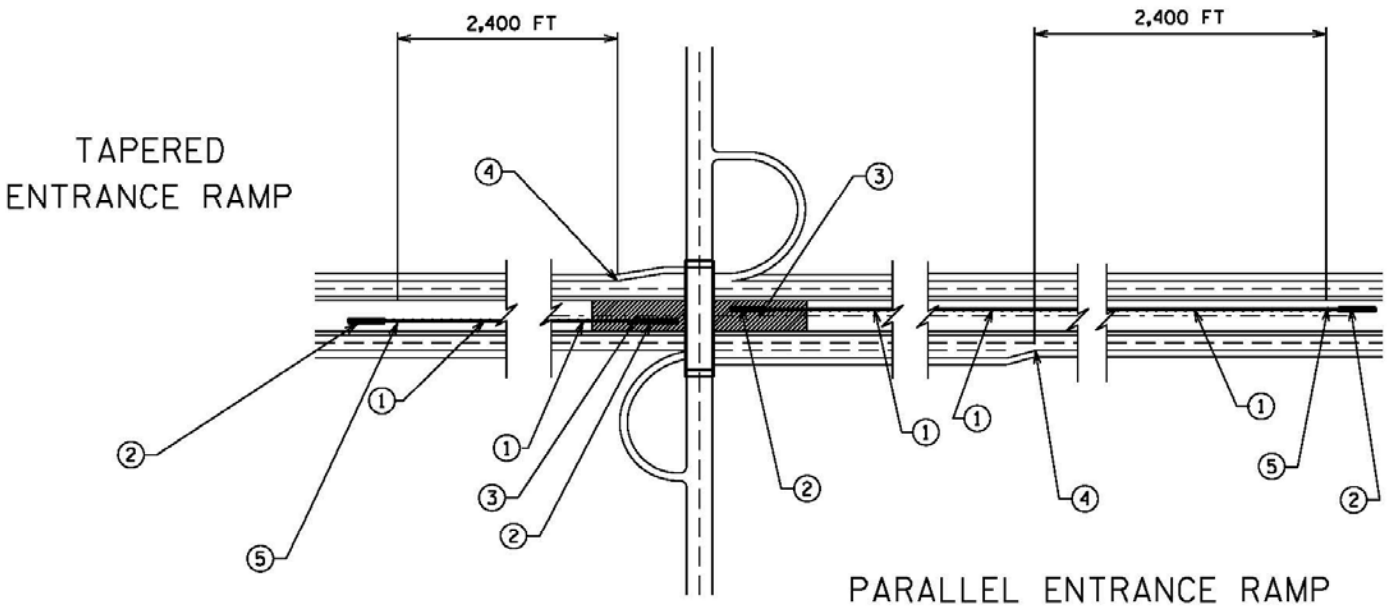

CABLE BARRIER INSTALLATION AT LOOP RAMPS

1. CABLE BARRIER
2. CABLE BARRIER END TERMINAL
3. SEE OTHER DETAILS FOR CABLE BARRIER NEAR BRIDGE PIERS OR OTHER LARGE FIXED OBJECTS
4. INTERSECTION OF RAMP EDGE OF LANE AND MAINLINE EDGE OF LANE
5. LENGTH OF NEED POINT OF CABLE BARRIER END TERMINAL

DRAWINGS NOT TO SCALE
DRAWINGS ARE INTENDED TO SHOW GENERAL ROADSIDE DESIGN CONCEPTS AND ARE NOT INTENDED TO BE INSERTED INTO PLANS.
DESIGNERS ARE RESPONSIBLE FOR PROVIDING INDIVIDUAL CONSTRUCTION DETAILS FOR THEIR PROJECTS.

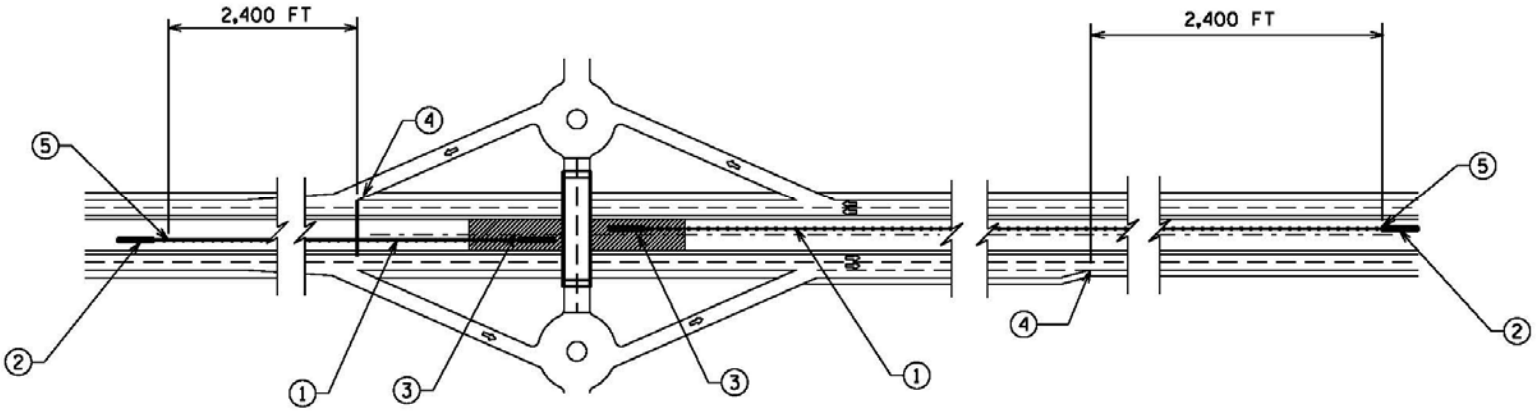

TAPERED ENTRANCE RAMP PARALLEL ENTRANCE RAMP

CABLE BARRIER INSTALLATION AT DIAMOND INTERCHANGE

1. CABLE BARRIER
2. CABLE BARRIER END TERMINAL
3. SEE OTHER DETAILS FOR CABLE BARRIER NEAR BRIDGE PIERS OR OTHER LARGE FIXED OBJECTS
4. INTERSECTION OF RAMP EDGE OF LANE AND MAINLINE EDGE OF LANE
5. LENGTH OF NEED POINT OF CABLE BARRIER END TERMINAL

DRAWINGS NOT TO SCALE
DRAWINGS ARE INTENDED TO SHOW GENERAL ROADSIDE DESIGN CONCEPTS AND ARE NOT INTENDED TO BE INSERTED INTO PLANS.
DESIGNERS ARE RESPONSIBLE FOR PROVIDING INDIVIDUAL CONSTRUCTION DETAILS FOR THEIR PROJECTS.

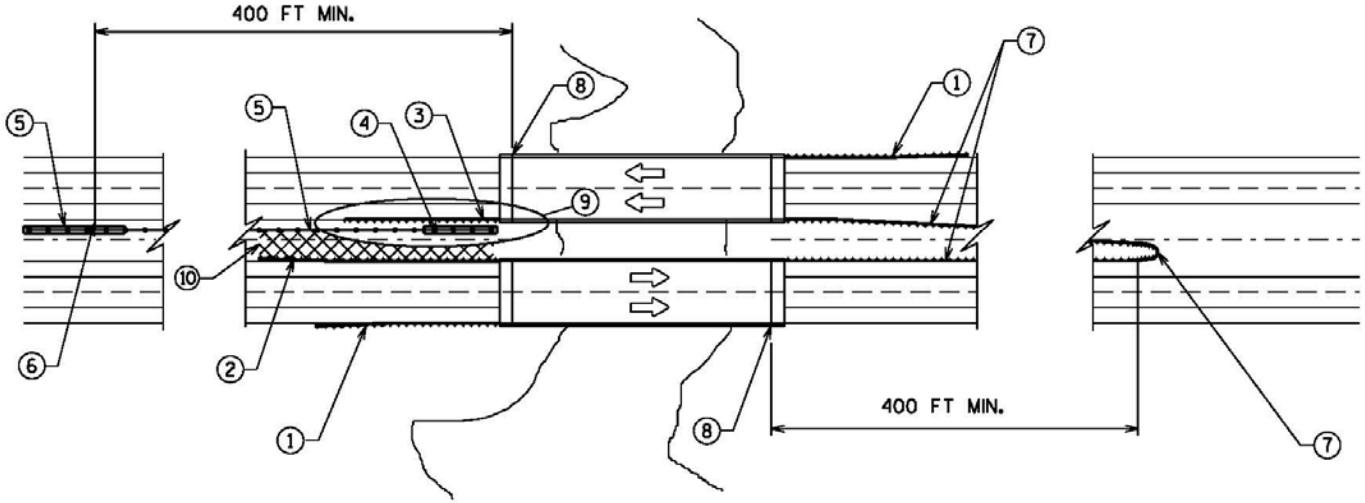

CABLE BARRIER AND THRIE BEAM BULLNOSE INSTALLATION
WHEN MAINLINE GOES OVER ROADWAY OR STREAM

1. EAT. BEAM GUARD AND THRIE BEAM APPROACH TRANSITION WITH APPROPRIATE LON FOR HAZARDS PRESENT
2. EAT. BEAM GUARD AND THRIE BEAM APPROACH TRANSITION WITH APPROPRIATE LON TO SHIELD CABLE BARRIER END TERMINAL AND OTHER HAZARDS PRESENT
3. THRIE BEAM DOWNSTREAM TRANSITION, BEAM GUARD AND TYPE 2 END TREATMENT WITH APPROPRIATE LENGTH TO PREVENT VEHICLE INTERACTION WITH CABLE BARRIER END TERMINAL
4. CABLE END TERMINAL
5. CABLE BARRIER
6. LENGTH OF NEED POINT OF CABLE BARRIER END TERMINAL
7. THRIE BEAM BULLNOSE WITH THRIE BEAM AND THREI BEAM APPROACH TRANSITION
8. EDGE OF BRIDGE DECK
9. SEE DETAIL C
10. CABLE BARRIER IS PLACED TO MINIMIZE VEHICLE REBOUNDING OFF OF CABLE BARRIER AND INTO BACK SIDE OF BEAM GUARD.

DRAWINGS NOT TO SCALE
DRAWINGS ARE INTENDED TO SHOW GENERAL ROADSIDE DESIGN CONCEPTS AND ARE NOT INTENDED TO BE INSERTED INTO PLANS.
DESIGNERS ARE RESPONSIBLE FOR PROVIDING INDIVIDUAL CONSTRUCTION DETAILS FOR THEIR PROJECTS.

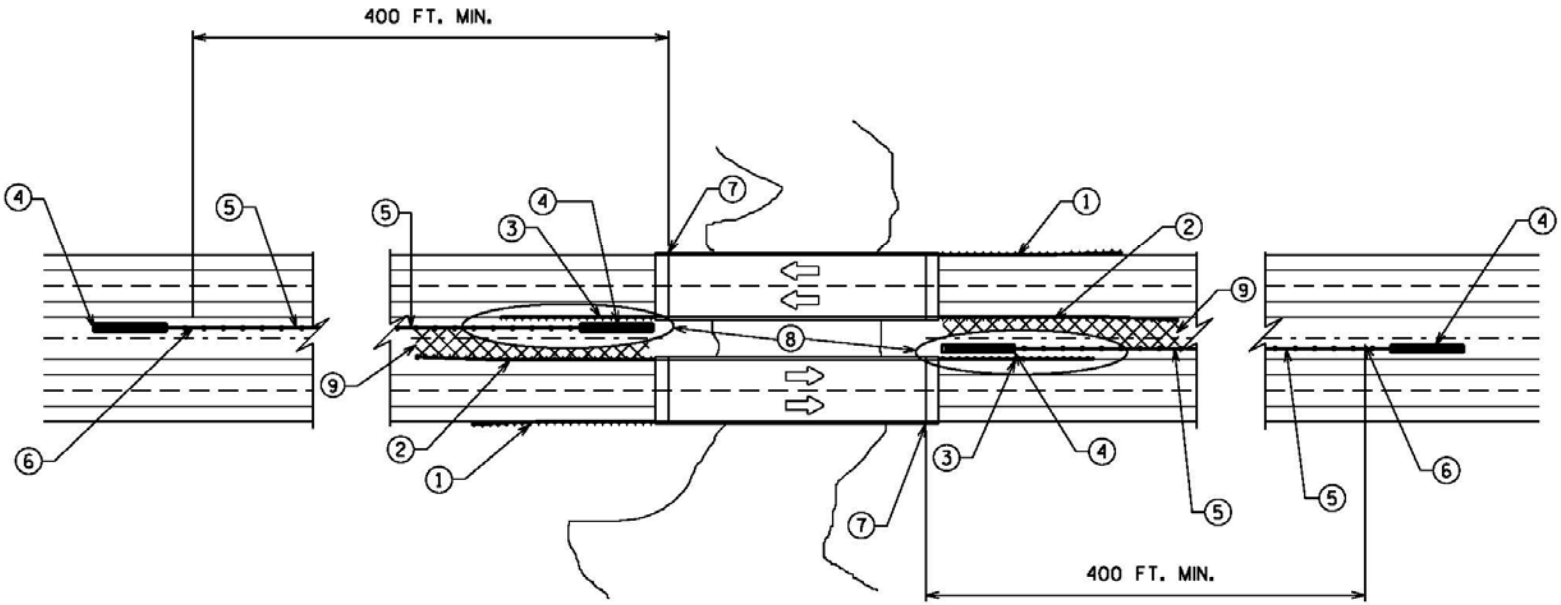

CABLE BARRIER INSTALLATION WHEN MAINLINE GOES OVER ROADWAY OR STREAM

1. EAT, BEAM GUARD AND THRIE BEAM APPROACH TRANSITION WITH APPROPRIATE LON FOR HAZARDS PRESENT
2. EAT, BEAM GUARD AND THRIE BEAM APPROACH TRANSITION WITH APPROPRIATE LON TO SHIELD CABLE BARRIER END TERMINAL AND OTHER HAZARDS PRESENT
3. THRIE BEAM DOWNSTREAM TRANSITION, BEAM GUARD AND TYPE 2 END TREATMENT WITH APPROPRIATE LENGTH TO PREVENT VEHICLE INTERACTION WITH CABLE BARRIER END TERMINAL
4. CABLE END TERMINAL
5. CABLE BARRIER
6. LENGTH OF NEED POINT OF CABLE BARRIER END TERMINAL
7. EDGE OF BRIDGE DECK
8. SEE DETAIL C
9. CABLE BARRIER IS PLACED TO MINIMIZE VEHICLE REBOUNDING OFF OF CABLE BARRIER INTO BACK SIDE OF BEAM GUARD. ADDITIONAL BEAM GUARD IS INSTALLED DOWNSTREAM OF THE BRIDGE TO SHIELD CABLE BARRIER END TERMINAL FROM BEING STRUCK.

DRAWINGS NOT TO SCALE

DRAWINGS ARE INTENDED TO SHOW GENERAL ROADSIDE DESIGN CONCEPTS AND ARE NOT INTENDED TO BE INSERTED INTO PLANS.

DESIGNERS ARE RESPONSIBLE FOR PROVIDING INDIVIDUAL CONSTRUCTION DETAILS FOR THEIR PROJECTS.

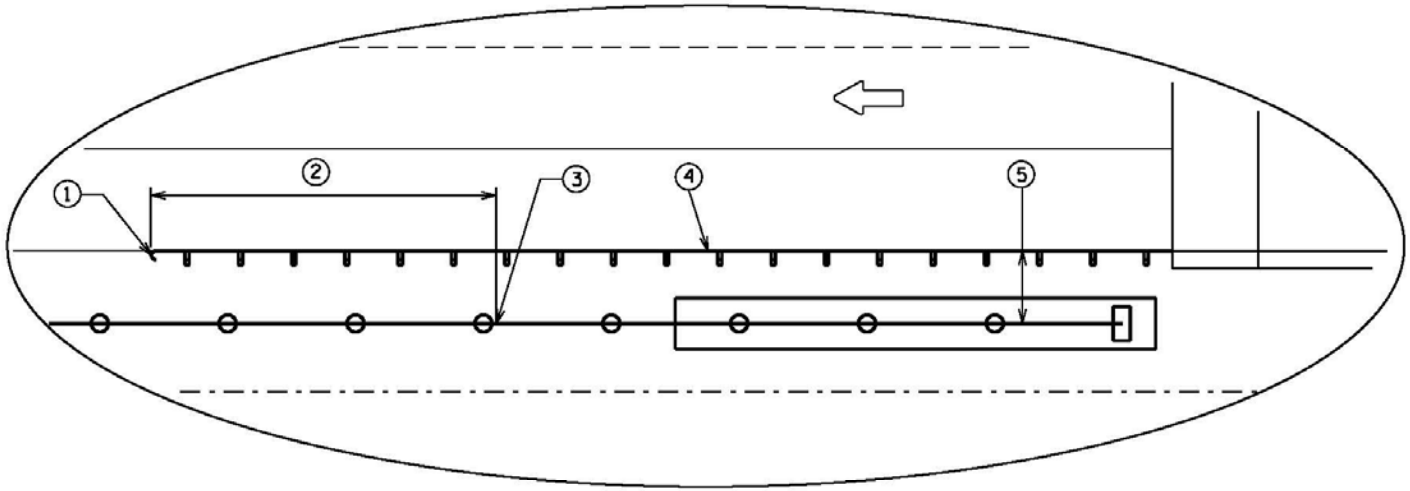

DETAIL C

1. TYPE 2 END TERMINAL
2. 39.5 FEET BEYOND LENGTH OF NEED POINT
3. LENGTH OF NEED POINT OF CABLE BARRIER END TERMINAL
4. THRIE BEAM DOWNSTREAM TRANSITION AND BEAM GUARD
5. WORKING WIDTH OF BEAM GUARD

DRAWINGS NOT TO SCALE
DRAWINGS ARE INTENDED TO SHOW GENERAL ROADSIDE DESIGN CONCEPTS AND ARE NOT INTENDED TO BE INSERTED INTO PLANS.
DESIGNERS ARE RESPONSIBLE FOR PROVIDING INDIVIDUAL CONSTRUCTION DETAILS FOR THEIR PROJECTS.

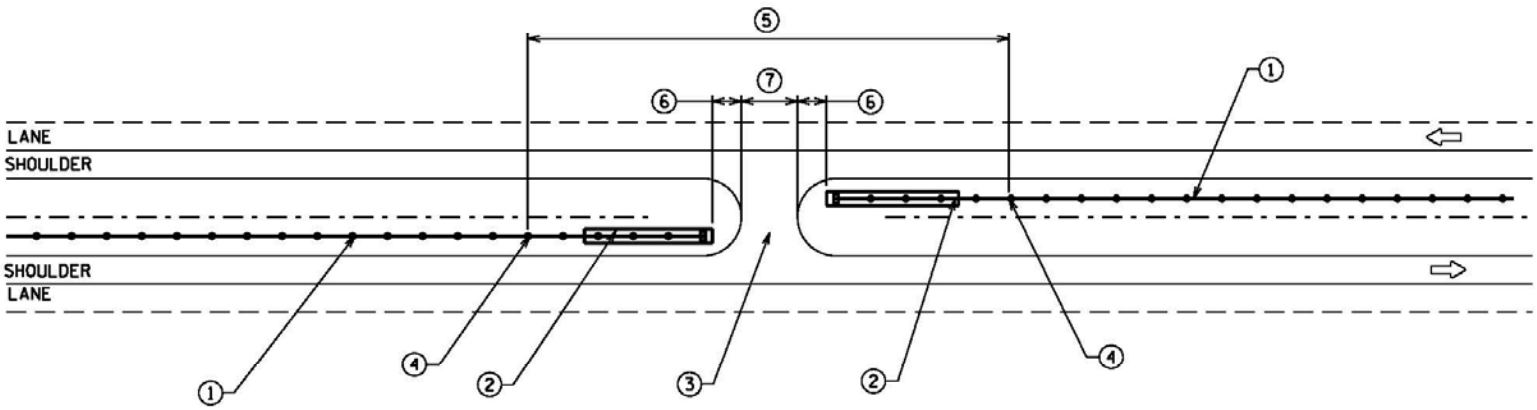

CABLE BARRIER LAYOUT BY MAINTENANCE CROSSOVER

1. CABLE BARRIER
2. CABLE BARRIER END TERMINAL
3. MAINTENANCE CROSSOVER
4. LENGTH OF NEED POINT OF CABLE BARRIER END TERMINAL
5. LENGTH OF ROADWAY UNSHIELDED FROM CROSS MEDIAN CRASH
6. OFFSET FROM PAVED MAINTENANCE CROSS OVER AND 1ST CABLE BARRIER END TERMINAL ANCHOR
7. WIDTH OF MAINTENANCE CROSS OVER (SEE SDD 11A1)

MINIMIZE AMOUNT OF MEDIAN THAT IS LEFT UNSHIELDED TO CROSS MEDIAN CRASHES, BY HAVING CABLE BARRIER SWITCH SIDES OF MEDIAN.

DISCUSS OFFSET FROM PAVED MAINTENANCE CROSS OVER AND 1ST ANCHOR OF CABLE BARRIER MEDIAN ANCHOR WITH MAINTENCE STAFF.

DRAWINGS NOT TO SCALE

DRAWINGS ARE INTENDED TO SHOW GENERAL ROADSIDE DESIGN CONCEPTS AND ARE NOT INTENDED TO BE INSERTED INTO PLANS.

DESIGNERS ARE RESPONSIBLE FOR PROVIDING INDIVIDUAL CONSTRUCTION DETAILS FOR THEIR PROJECTS.