STORM SEWER - FILL HEIGHT TABLE FOR CONCRETE PIPE

Type/Class of Pipe	AASHTO Materials Designation	Pipe Size I.D. (inches)	Maximum Height of Cover Over Top of Pipe (feet)
Reinforced Concrete Class I	M 170	60-108	9
Reinforced Concrete Class II	M 170	12-108	11
Reinforced Concrete Class III	M 170	12-108	15
Reinforced Concrete Class IV	M 170	12-84	25
Reinforced Concrete Class V	M 170	12-72	35

Surface Loadings

Sewer pipe shall be reinforced concrete when subject to highway loadings and depth of cover is 6-feet or less. The minimum pipe class required in such cases is as follows:

Height of Cover (feet)	0 to 2	2 to 3	3 to 6
Minimum Class of Concrete Pipe Required	IV	III	II

Design Criteria

The above table refers to Class C bedding using sand/gravel backfill weighing 120 lb/ft^3 with zero projecting embankment condition and trench widths as specified Standard Spec 608.

FILL HEIGHT TABLE 1

Corrugated Steel, Aluminum, Polyethylene, Polypropylene and Reinforced Concrete Pipe

HS20 Loading 2" x 1/2" Corrugations - Standard Specification Bedding Unless Otherwise Noted

		Height of Cover Over Top Pipe in Feet - "H"																	
		Min. to 15' **(2)**			16' to 20'			21' to 25'			26' to 30'			31' to 35'			36' to 40'		
Dia. In. **(5)**	Area S.F.	Thickness		RCCP Class Pipe	Thickness		RCCP Class Pipe	Thickness		RCCP Class Pipe	Thickness		RCCP Class Pipe	Thickness		RCCP Class Pipe	Thickness		RCCP Class Pipe
		Steel	Alum		Steel	Alum		Steel	Alum		Steel	Alum		Steel	Alum		Steel	Alum	
* 12	0.8	0.064	0.060	III	0.064	0.060	IV	0.064	0.060	IV	0.064	0.060	V	0.064	0.060	V	0.064	0.075	V **(4)**
* 15	1.2	0.064	0.060	III	0.064	0.060	IV	0.064	0.060	IV	0.064	0.060	V	0.064	0.075	V	0.064	0.105	V **(4)**
* 18	1.8	0.064	0.060	III	0.064	0.060	IV	0.064	0.060	IV	0.064	0.075	V	0.064	0.105	V	0.064	0.135	V **(4)**
* 21	2.4	0.064	0.060	III	0.064	0.060	IV	0.064	0.075	IV	0.064	0.105	V	0.064	0.135	V	0.079	X	V **(4)**
* 24	3.1	0.064	0.075	III	0.064	0.075	IV	0.079	0.075	IV	0.079	0.105	V	0.079	0.164	V	0.079	X	V **(4)**
* 30	4.9	0.079	0.075	III	0.079	0.075	IV	0.079	0.105	IV	0.079	0.135	V	0.109	X	V	0.109	X	V **(4)**
* 36	7.1	0.079	0.105	III	0.079	0.105	IV	0.109	0.135	IV	0.109	0.164	V	0.138	X	V	0.138	X	V **(4)**
42	9.6	0.109	0.105	III	0.109	0.135	IV	0.109	0.164	IV	0.138	0.164	V	0.138	X	V	0.168	X	V **(4)**
48	12.6	0.109	0.105	III	0.109	0.135	IV	0.138	0.164	IV	0.168	X	V	0.168	X	V	0.138 E	X	V **(4)**
54	15.9	0.109	0.105	III	0.138	0.135	IV	0.168	0.164	IV	0.168	X	V	0.109 E	X	V	0.138 E	X	V **(4)**
60	19.6	0.138	0.164	III	0.138	X	IV	0.168	X	IV	0.138 E	X	V	0.138 E	X	V	0.168 E	X	V **(4)**
66	23.8	0.138	0.164	III	0.168	X	IV	0.168	X	IV	0.138 E	X	V	0.138 E	X	V	0.168 E	X	V **(4)**
72	28.3	0.138(3)	0.164	III	0.168	X	IV	0.168	X	IV	0.138 E	X	V						
78	33.2	0.168	X	III	0.168	X	IV	0.168 E	X	IV	**(1)**								
84	38.5	0.168	X	III	0.168	X	IV												

E = Elongated, Vertical Axis 5% greater than Horizontal
(1) Any pipe under the heavy line will require a special design.
(2) 12" minimum cover, top of pipe to top of subgrade.
(3) A thickness of 0.138" may be used for fill heights of min. to 10 Ft. a thickness of 0.168" may be used for fill heights of greater than 10 Ft. but less than 26 feet.
(4) Class "B" Bedding required.
NOTE: For steel and aluminum pipe in the shaded portion of the table, a corrugation size of 3" by 1" is generally more economical than 2 2/3 by 1/2 See table 2 and 7.

X = Do not use
(5) For corrugated steel pipe in a 6", 8" or 10" diameter, the minimum thickness is 0.052" and 0.064" respectively.
For corrugated aluminum pipe in 6", 8" or 10" diameter, the minimum thickness is 0.048", 0.048" and 0.06" respectively.
***** Corrugated polyethylene and corrugated polypropylene pipe in these diameters are available for use as specified in FDM 13-1-15 and FDM 13-1-17. Minimum fill height shall be 24 inches and maximum fill height shall be 11 feet for polyethylene and 15 feet for polypropylene. It is not necessary to specify thickness.

FILL HEIGHT TABLE 2 (1)
Corrugated Steel Pipe - 3" x 1" Corrugations - H20 Live Load

Pipe Dia. In.	Waterway Area Sq. Ft.	Min. Cover In. (3)	Maximum Height of Fill - Ft.				
			Metal Thickness in Inches (2)				
			0.064	0.079	0.109	0.138	0.168
60	19.6	12	24	30	44	53	58
66	23.8	12	22	27	40	48	53
72	28.3	12	20	25	37	44	49
78	33.2	12	18	23	34	40	45
84	38.5	12	17	22	32	37	42
90	44.2	12	16	20	29	35	39
96	50.3	12	X	19	28	33	37
102	56.7	24	X	17	26	31	34
108	63.6	24	X	X	24	29	32
114	70.9	24	X	X	23	27	31
120	78.5	24	X	X	X	26	29

FILL HEIGHT TABLE 3 (1)
Structural Plate Pipe 6" x 2" Corrugations - H20 Live Load

Pipe Dia. In.	Waterway Area Sq. Ft.	Min. Cover In. (3)	Maximum Height of Fill - Ft. (4)						
			Metal Thickness in Inches (2)						
			0.10	0.138	0.168	0.188	0.218	0.249	0.280
60	19.6	12	35	51	67	77	87 (93)	96 (110)	106 (120)
72	28.3	12	29	43	54	57 (64)	62 (77)	67 (91)	73 (100)
84	38.5	12	25	36	44	46 (55)	49 (66)	53 (78)	56 (85)
96	50.3	12	22	32	39	40 (48)	42 (58)	44 (68)	47 (75)
102	56.7	24	20	30	37	38	40 (55)	42 (64)	43 (70)
108	63.6	24	19	28	35	36	38 (52)	39 (61)	41 (66)
120	78.5	24	17	25	33	34	35 (46)	36 (55)	37 (60)
132	95.0	24	16	23	30	32	33 (42)	34 (50)	35 (54)
144	113.1	24	14	21	28	31	32	32 (45)	33 (50)
156	132.7	24	13	19	25	29	31	31 (42)	32 (46)
168	153.9	24	12	18	24	27	30	31	31 (42)
180	176.7	24	11	17	22	25	30	30	30 (40)

(1) Table 2 is valid for the metric 125 mm x 25 mm corrugation which may be used in lieu of 3" x 1" corrugations for fill heights to 30 feet.
(2) The steel thicknesses shown are adequate for structural requirements only. Where corrosive and/or abrasive conditions exist, greater thicknesses should be specified.
(3) Minimum cover top of pipe to top of subgrade.
(4) Maximum fill heights shown in parentheses are permitted if the pipe is elongated - Vertical axis 5% greater than the horizontal axis.

NOTE: Corrugated steel pipe (CSCP) is normally more economical to use than structural plate pipe (SPP) for installations where either type will satisfy fill height requirements. The potential cost savings of the CSCP is possible because CSCP is factory assembled into transportable lengths whereas SPP must be field assembled from plates.

FILL HEIGHT TABLE 4
Corrugated Steel Pipe Arch - 2" x 1/2" Corrugations - H20 Live Load

Size Span x Rise Inches	Min. Thickness In. (1)	Min. Cover In. (2)	Max. Height of Fill Ft. (3)	Waterway Area Sq. Ft.	Round Pipe of Equal Periphery	
					Waterway Area Sq. Ft.	Dia. Inches
17 X 13	0.064	18	13	1.1	1.23	15
21 x 15	0.064	18	12	1.6	1.77	18
24 x 18	0.064	18	10	2.2	2.41	21
28 x 20	0.064	18	9	2.8	3.14	24
35 x 24	0.079	18	9	4.4	4.91	30
42 x 29	0.079	18	7	6.4	7.07	36
49 x 33	0.109	18	7	8.7	9.62	42
57 x 38	0.109	18	7	11.4	12.57	48
64 x 43	0.109	18	7	14.3	15.90	54
71 x 47	0.138	18	7	17.6	19.64	60
77 x 52	0.168	18	7	21.3	23.76	66
83 x 57	0.168	18	8	25.3	28.27	72

FILL HEIGHT TABLE 5
Corrugated Steel Pipe Arch (4) - 3" x 1" Corrugations - H20 Live Load

Size Span x Rise Inches	Min. Thickness In. (1)	Min. Cover In. (2)	Max. Height of Fill Ft. (3)	Waterway Area Sq. Ft.	Round Pipe of Equal Periphery	
					Waterway Area Sq. Ft.	Dia. Inches
40 x 31	0.064	18	12	6.4	7.07	36
46 x 36	0.064	18	12	8.7	9.62	42
53 x 41	0.064	18	12	11.4	12.57	48
60 x 46	0.064	18	12	14.3	15.90	54
66 x 51	0.064	18	12	17.6	19.64	60
73 x 55	0.064	18	15	22.0	23.76	66
81 x 59	0.079	18	15	26.0	28.27	72
87 x 63	0.079	18	14	31.0	33.18	78
95 x 67	0.109	18	12	35.0	38.48	84
103 x 71	0.109	24	11	40.0	44.18	90
112 x 75	0.109	24	10	46.0	50.27	96
117 x 79	0.109	24	10	52.0	56.74	102
128 x 83	0.138	24	9	58.0	63.62	108

(1) The steel thicknesses shown are adequate for structural requirements only. Where corrosive and/or abrasive conditions exist, greater thicknesses should be specified.
(2) Minimum cover top of pipe to top of subgrade.
(3) Allowable fill heights are computed on the basis that corner bearing pressure will **not exceed** two tons per square foot.
(4) Table 5 is also valid for the metric 125 mm x 25 mm corrugation which may be used in lieu of the 3" x 1" corrugations.

Fill Height Table 6
Structural Plate Pipe Arch - 6" x 2" Corrugations - H20 Live Load

Bid Item Number	Size	Waterway Area Sq. Ft.	Min. Thickness Inches **(1)**	Min. Cover Inches **(2)**	Max. Height of Fill Ft. **(3)**	Corner Radius Inches	Lay out Dimensions		
	Span x Rise (Ft. - Inches)						B Inches	R_1 Feet	R_2 Feet
527.0305	6-1 x 4-7	22	0.109	18	15	18	21.0	3.07	6.36
527.0310	7-0 x 5-1	28			15		21.4	3.53	8.68
527.0315	8-2 x 5-9	38		24	12		20.9	4.08	15.24
527.0320	8-10 x 6-1	43			11		21.8	4.24	14.89
527.0325	9-9 x 6-7	52			10		21.9	4.86	18.98
527.0330	11-5 x 7-3	64			8		27.4	5.78	13.16
527.0335	11-10 x 7-7	71			7		25.2	5.93	18.03
527.0340	12-10 x 8-4	85			6		24.0	6.44	26.23
SPV.0090	13-3 x 9-4	97		36	13	31	38.5	6.68	16.05
SPV.0090	14-2 x 9-10	109			12		38.8	7.13	18.55
SPV.0090	15-4 x 10-4	123	0.138		11		41.8	7.76	17.38
SPV.0090	16-3 x 10-10	137			10		42.1	8.21	19.67
SPV.0090	17-2 x 11-4	151			10		42.3	8.65	22.23
SPV.0090	18-1 x 11-10	167	0.168		9		42.4	9.09	24.98
SPV.0090	19-3 x 12-4	182			8		45.9	9.75	23.22
SPV.0090	19-11 x 12-10	200			7		42.5	9.98	31.19
SPV.0090	20-7 x 13-2	211	0.188		6		43.7	10.33	31.13

(1) The metal thickness shown are adequate for structural requirements only. Where corrosive and/or abrasive conditions exist, greater thicknesses should be specified at least for the bottom plates.

(2) Minimum cover top of pipe to top of subgrade.

(3) Allowable fill heights are computed on the basis that corner bearing pressure will not exceed two tons per square foot.

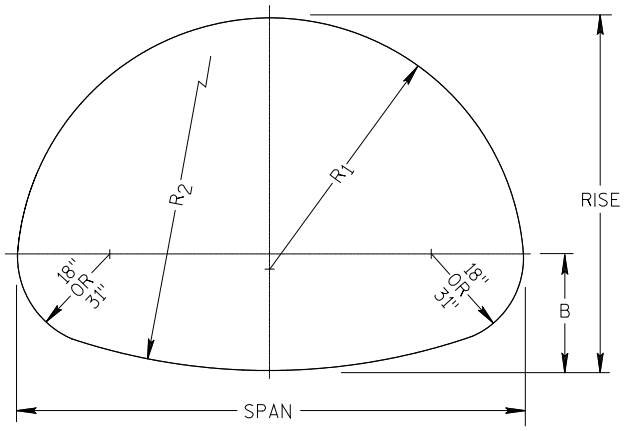

LAYOUT DIMENSIONS

FILL HEIGHT TABLE 7

Corrugated Aluminum Pipe 3" x 1" Corrugations - H20 Live Load

Pipe Dia. In.	Waterway Area Sq. Ft.	Min. Cover In. **(2)**	Maximum Height of Fill - Ft.				
			Metal Thickness in Inches **(1)**				
			0.060	0.075	0.10	0.13	0.164
60	19.6	12	12	17	23	31	32
66	23.8	12	13	16	21	31	31
72	28.3	12	12	14	19	30	30
78	33.2	18	X	13	18	30	30
84	38.5	18	X	X	17	29	30
90	44.2	18	X	X	16	29	29
96	50.3	18	X	X	16	29	29
102	56.7	18	X	X	X	27	29
108	63.6	18	X	X	X	25	28
114	70.9	18	X	X	X	X	28
120	78.5	18	X	X	X	X	28

FILL HEIGHT TABLE 8

Aluminum Alloy, Structural Plate Pipe 9" x 2 1/2" Corrugations - H20 Live Load

Pipe Dia. In.	Waterway Area Sq. Ft.	Minimum Cover In. **(2)**	Maximum Height of Fill - Ft.						
			Metal Thickness in Inches **(1)**						
			0.10	0.12	0.15	0.17	0.20	0.22	0.250
60	19.6	15	22	29	37	44	55	59	61
72	28.3	21	18	24	31	37	44	46	48
84	38.5	21	15	21	26	31	37	39	40
96	50.3	24	14	19	23	28	35	35	36
102	56.7	24	13	17	22	26	34	34	35
108	63.6	27	12	16	21	24	33	33	34
120	78.5	27	11	14	19	22	31	32	32
132	95.0	30	X	13	17	20	28	31	31
144	113.1	30	X	12	15	18	25	29	30
156	132.7	30	X	11	14	17	24	27	30
168	153.9	30	X	X	13	16	22	25	28
180	176.7	30	X	X	X	15	20	23	26

Note: X = Do not use - design strengths exceeded.

(1) The metal thicknesses shown are adequate for structural requirements only. Where corrosive and/or abrasive conditions exist, greater thickness should be specified.

(2) Minimum cover top of pipe to top of subgrade.

FILL HEIGHT TABLE 9

Corrugated Aluminum Pipe Arch, 2 - 2/3" X 1/2" Corrugations - H20 Live Load

Size	Min. Thickness In. (1)	Min. Cover In.(2)	Max. Height of Fill ft. (3)	Waterway Area Sq. Ft.	Round Pipe of Equal Periphery	
Span x Rise Inches					Waterway Area Sq. Ft.	Dia. Inches
17 x 13	0.060	18	12	1.1	1.23	15
21 x 15	0.060		10	1.6	1.77	18
24 x 18	0.060		8	2.2	2.41	21
28 x 20	0.075		7	2.8	3.14	24
35 x 24	0.075		6	4.4	4.91	30
42 x 29	0.105		6	6.4	7.07	36
49 x 33	0.105		5	8.7	9.62	42
57 x 38	0.135		6	11.4	12.57	48
64 x 43	0.135		6	14.3	15.90	54
71 x 47	0.164		7	17.6	19.64	60

(1) The metal thicknesses shown are adequate for structural requirements only. Where corrosive and/or abrasive conditions exist, greater thicknesses should be specified.

(2) Minimum cover top of pipe to top of subgrade.

(3) Allowable fill heights are computed on the basis that corner bearing pressure will not exceed two tons per square foot.

FILL HEIGHT TABLE 10

Aluminum Alloy Structural Plate Pipe Arch - 9" X 2 1/2" Corrugations - H20 Live Load

Size	Waterway Area Sq. Ft.	Min. Thickness, In. (1)	Min. Cover (2)	Max. Height of Fill (3)	Corner Radius	Layout Dimensions		
Span x Rise Ft-In						B Inches	R_1 Feet	R_2 Feet
6-2 x 5-0	25	0.100	24 Inches	18	27 Inches	27.2	3.25	24.93
6-7 x 5-8	30			16		32.5	3.46	5.82
8-1 x 6-1	39			13		33.5	4.44	9.00
8-10 x 6-4	44		30 Inches	11		35.6	5.27	7.75
9-11 x 6-8	53			10		34.2	5.53	15.72
11-5 x 7-1	64			9		35.3	6.51	18.50
12-3 x 7-3	70		36 Inches	8		38.4	7.57	13.77
13-1 x 8-4	87			8		42.0	7.40	11.97
14-0 x 8-7	94	0.125		10		39.4	7.52	17.92
14-8 x 9-8	110	0.125		10		44.0	7.57	13.85
15-7 x 10-2	123	0.150		10		44.4	8.03	15.80
16-9 x 10-8	137	0.150		10		47.9	8.75	15.52
17-9 x 11-2	152	0.175		9		48.2	9.20	17.40
18-8 x 11-8	167	0.175		8		48.5	9.65	19.44
19-10 x 12-1	183	0.225		8		52.3	10.39	18.97
20-10 x 12-7	200	0.250		8		52.5	10.83	20.93
21-6 x 12-11	211	0.250		7		53.9	11.23	21.43

(1) The metal thicknesses shown are adequate for structural requirements only. Where corrosive and/or abrasive conditions exist, greater thicknesses should be specified at least for the bottom plates.

(2) Minimum cover top of pipe to top of subgrade.

(3) Allowable fill heights are computed on the basis that corner bearing pressure will not exceed two tons per square foot.

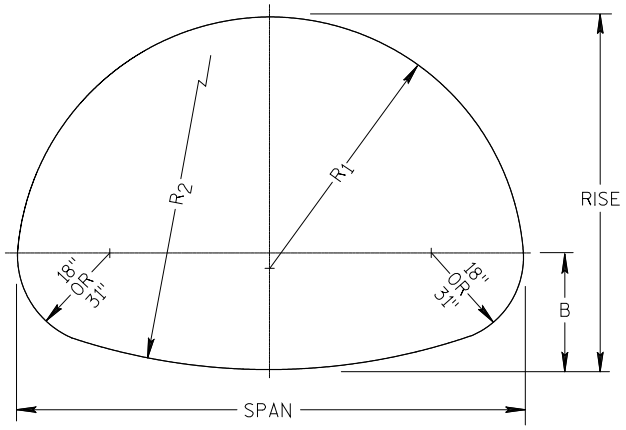

LAYOUT DIMENSIONS

Dimensions for Reinforced Concrete Arch and Elliptical Pipe

	Arch			Vertical Elliptical			Horizontal Elliptical		
Equivalent Round Size (Inches)	**Rise x Span (Inches)**	**Waterway Area (Sq. Ft).**	**Minimum Wall Thickness (Inches)**	**Rise x Span (Inches)**	**Waterway Area (Sq. Ft.)**	**Minimum Wall Thickness (Inches)**	**Rise x Span (Inches)**	**Waterway Area (Sq. Ft.)**	**Minimum Wall Thickness (Inches)**
15	11 x 18	1.1	2.25						
18	13 x 22	1.6	2.5				14 x 23	1.8	2.75
21	15 x 26	2.2	2.75						
24	18 x 28	2.8	3.0				19 x 30	3.3	3.25
27							22 x 34	4.1	3.5
30	22 x 36	4.4	3.5				24 x 38	5.1	3.75
33							27 x 42	6.3	3.75
36	27 x 44	6.4	4.0	45 x 29	7.4	4.5	29 x 45	7.4	4.5
39				49 x 32	8.8	4.75	32 x 49	8.8	4.75
42	31 x 51	8.8	4.5	53 x 34	10.2	5.0	34 x 53	10.2	5.0
48	36 x 58	11.4	5.0	60 x 38	12.9	5.5	38 x 60	12.9	5.5
54	40 x 65	14.3	5.5	68 x 43	16.6	6.0	43 x 68	16.6	6.0
60	45 x 73	17.7	6.0	76 x 48	20.5	6.5	48 x 76	20.5	6.5
66				83 x 53	24.8	7.0	53 x 83	24.8	7.0
72	54 x 88	25.6	7.0	91 x 58	29.5	7.5	58 x 91	29.5	7.5
78				98 x 63	34.6	8.0	63 x 98	34.6	8.0
84	62 x 102	34.6	8.0	106 x 68	40.1	8.5	68 x 106	40.1	8.5
90	72 x 115	44.5	8.5	113 x 72	46.1	9.0	72 x 113	46.1	9.0
96	77 x 122	51.7	9.0	121 x 77	52.4	9.5	77 x 121	52.4	9.5
102				128 x 82	59.2	9.75	82 x 128	59.2	9.75
108	87 x 138	66.0	10.0	136 x 87	66.4	10.0	87 x 136	66.4	10.0
114				143 x 92	74.0	10.5	92 x 143	74.0	10.5
120	97 x 154	81.8	11.0	151 x 97	82.0	11.0	97 x 151	82.0	11.0
132	106 x 169	99.1	10.0	166 x 106	99.2	12.0	106 x 166	99.2	12.0
144				180 x 116	118.6	13.0	116 x 180	118.6	13.0

Fill Height Table 11
Reinforced Concrete Arch and Elliptical Pipe (All Sizes)

Type of Pipe	**Maximum Height of Fill - Ft.**			
	Class of Pipe (0.01" Crack D-Load)			
	Class A-III Class VE-III Class HE-III (1350 D	**Class A-IV Class VE-IV Class HE-IV (2000 D)**	**Class VE-V (3000 D)**	*Class VE-VI* **(4000 D)**
Arch	15	25		
Vertical Elliptical	15	25	35	45
Horizontal Elliptical	15	25		

NOTES:

(1) Minimum cover excluding pavement shall be 1 ft.

(2) Fill Heights were computed assuming Class "C" bedding. If Class "B" bedding is used, increase maximum height of fill by 20%.

Materials shall conform to AASHTO designation M206 for reinforced concrete arch pipe and AASHTO designation M207 for reinforced concrete elliptical pipe. Requires special provision. Use SPV.0090 Bid Item.