ASPHALTIC FLUME

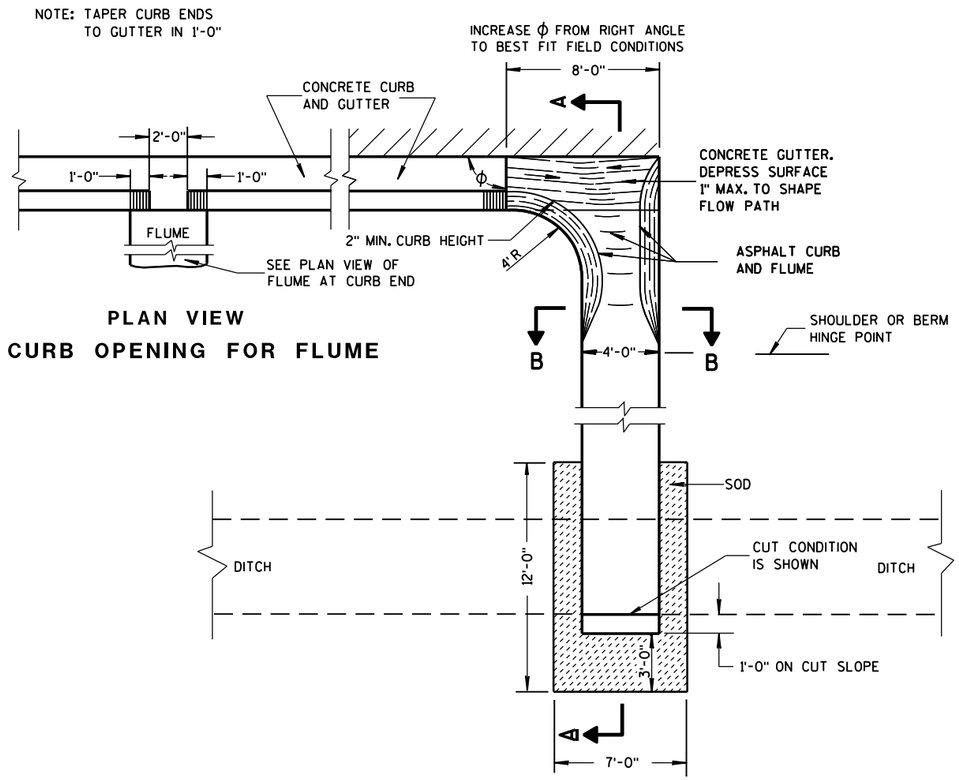

PLAN VIEW
CURB OPENING FOR FLUME

PLAN VIEW
FLUME AT CURB END

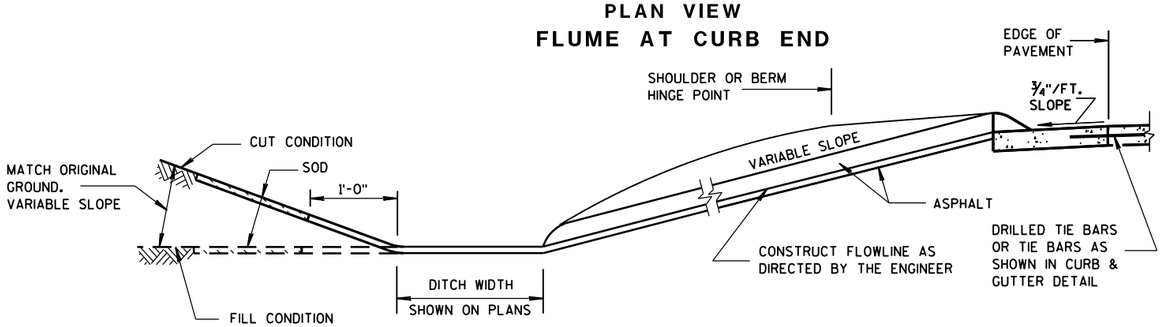

SECTION A-A

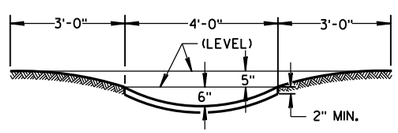

SECTION B-B

GENERAL NOTES

DETAILS OF CONSTRUCTION, MATERIALS AND WORKMANSHIP NOT SHOWN ON THIS DRAWING SHALL CONFORM TO PERTINENT REQUIREMENTS OF THE STANDARD SPECIFICATIONS AND APPLICABLE SPECIAL PROVISIONS.

WELDED STEEL WIRE FABRIC SHALL BE IN ACCORDANCE WITH AASHTO SPECIFICATION M55.

① JOINTS SHALL BE 1/8 TO 1/4 INCH WIDE BY 1 1/2 INCHES DEEP AND SPACED AT UNIFORM INTERVALS OF APPROXIMATELY 4 FEET.

② GEOTEXTILE FABRIC TYPE "R" SHALL UNDERLAY THE FULL LENGTH AND WIDTH OF THE CONCRETE SURFACE DRAIN AND RIPRAP.

③ CONCRETE SURFACE DRAIN WITHOUT CURB AND GUTTER MAY BE USED ON BACKSLOPES WHEN SPECIFIED

③ CONCRETE SURFACE DRAIN

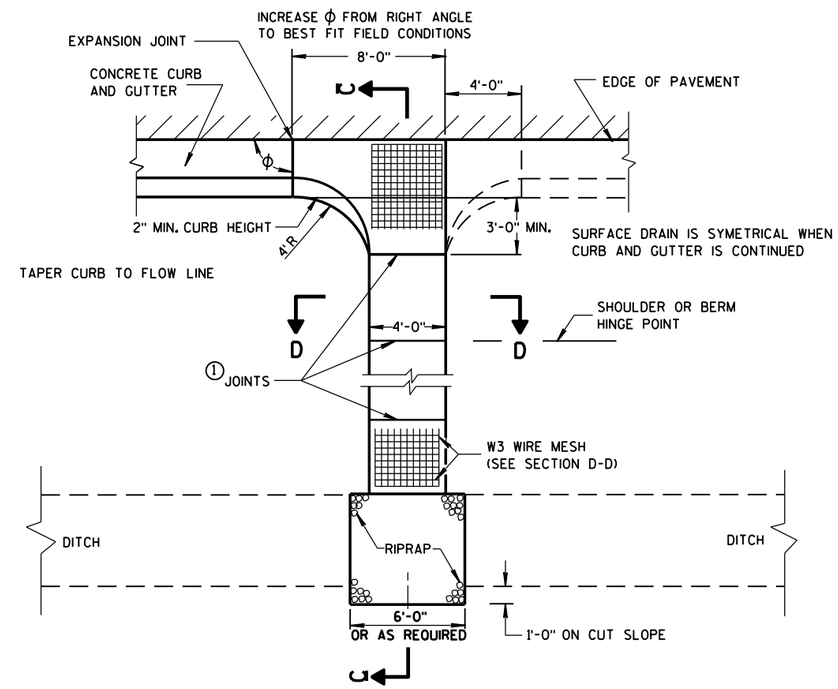

PLAN VIEW

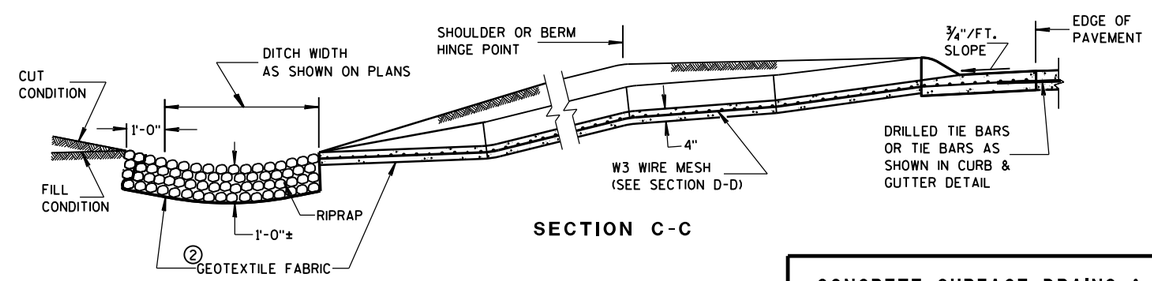

SECTION C-C

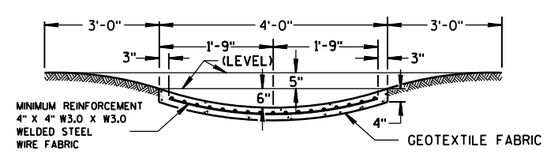

SECTION D-D

CONCRETE SURFACE DRAINS & ASPHALTIC FLUMES

STATE OF WISCONSIN
DEPARTMENT OF TRANSPORTATION

APPROVED

9/4/08 — DATE

/S/ Jerry H. Zogg — ROADWAY STANDARDS DEVELOPMENT ENGINEER

FHWA

Version 5	**Standard Detail Drawing 8d4**	*July 28, 2011*

Concrete Surface Drains & Asphaltic Flumes

References:

NONE

Bid items associated with this drawing:

ITEM NUMBER	DESCRIPTION	UNIT
416.0610	Drilled Tie Bars	EACH
416.1010	Concrete Surface Drains	CY
416.1015	Concrete surface Drains HES	CY
465.0310	Asphalt Curb	LF
465.0315	Asphalt Flumes	SY
606.0100	Riprap Light	CY
606.0200	Riprap Medium	CY
631.0300	Sod Water	MGAL
631.1000	Sod Lawn	SY
645.0130	Geotextile Fabric Type R	SY

Standardized Special Provisions associated with this drawing:

STSP NUMBER	TITLE
NONE	

Other SDDs associated with this drawing:

NONE

Design Notes:

Utilize inlets where storm water volumes and velocity cannot be accommodated effectively with flume or surface drain.

Contact Person:

Ann-Marie Kirsch (608) 267-3766