9E8 sheet a: Type 9 Pole 15'-30' Monotube Arm

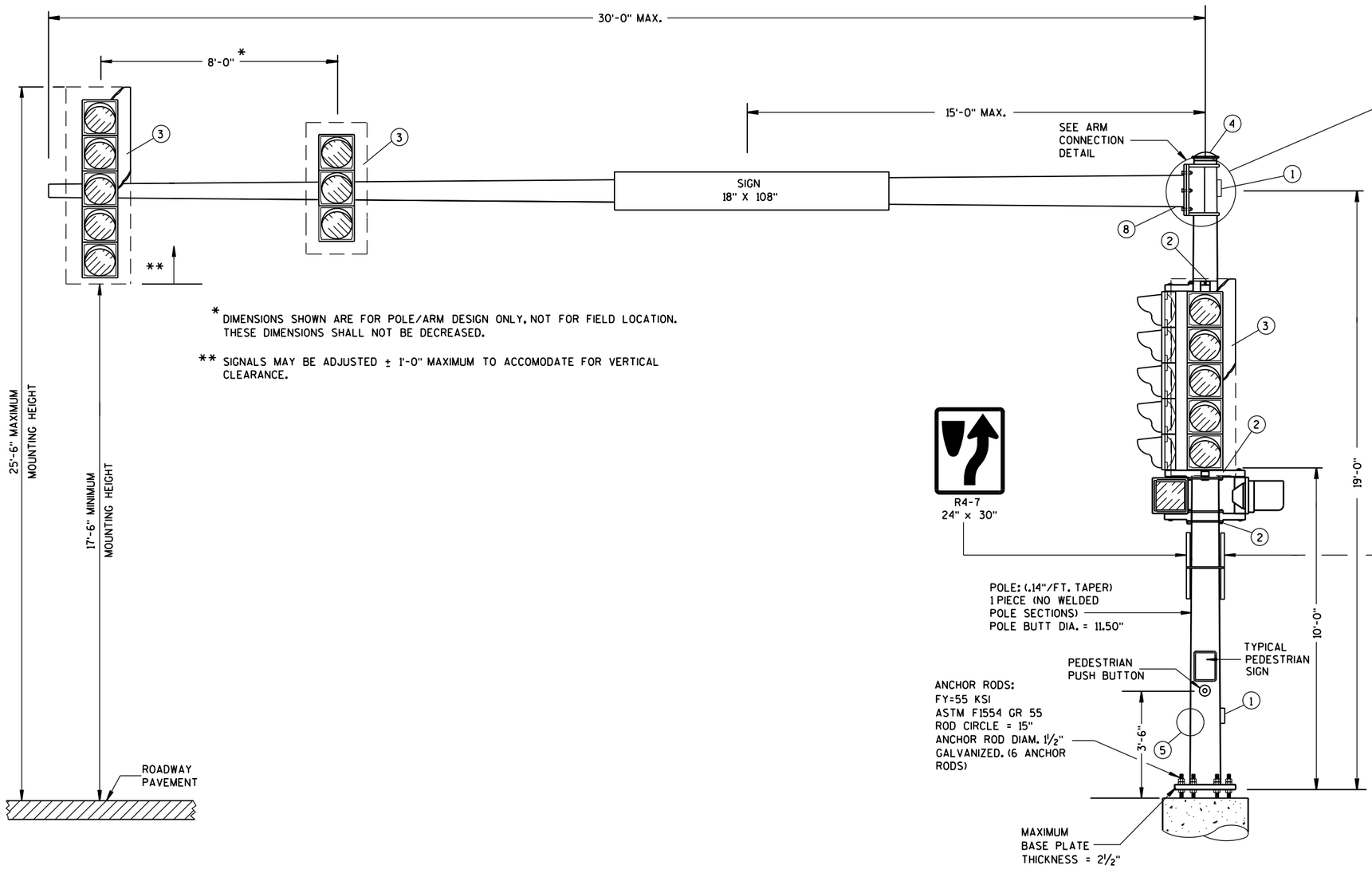

* DIMENSIONS SHOWN ARE FOR POLE/ARM DESIGN ONLY, NOT FOR FIELD LOCATION. THESE DIMENSIONS SHALL NOT BE DECREASED.

** SIGNALS MAY BE ADJUSTED ± 1'-0" MAXIMUM TO ACCOMODATE FOR VERTICAL CLEARANCE.

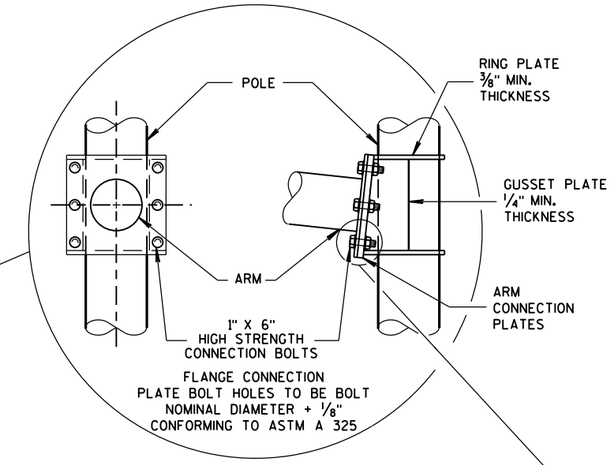

6 BOLT ARM CONNECTION DETAIL

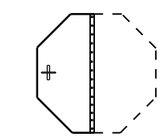

FOLDING STOP SIGN 30" x 30"

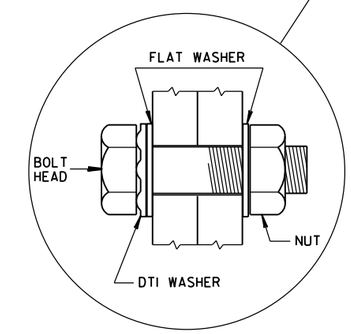

RECOMMENDED BOLT ASSEMBLY DETAIL

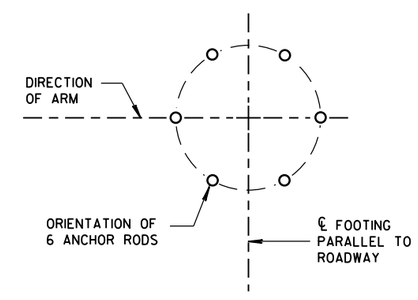

ANCHOR ROD LOCATION

(MAXIMUM LOAD)

TYPE 9 POLE 15'- 30' MONOTUBE ARM

TYPE 9 POLE 15' - 30' MONOTUBE ARM
STATE OF WISCONSIN DEPARTMENT OF TRANSPORTATION
APPROVED May, 2016 DATE — /S/ Ahmet Demirbilek STATE ELECTRICAL ENGINEER — FHWA

6

6

S.D.D. 9 E 8-8a

S.D.D. 9 E 8-8a

Type 9 Pole 15'-30' Monotube Arm

References:

Standard Spec 641.3.1.2 for Anchor Rod Tightening
Standard Spec 657.2.2.6 for Bolts and Bolted Connections.
TSDM Monotube Signal Arm and Pole Structures 6-1-11

Bid items associated with this drawing:

ITEM NUMBER	TITLE	UNIT
654.0110	Concrete Base Type 10	EACH
654.0100 - 0199	Concrete Base (type)	EACH
657.1515 - 1530	Install Monotube Arms 15-FT to 30-FT	EACH
658.0110	Traffic Signal Face 3-12 Inch Vertical	EACH
658.0115	Traffic Signal Face 4-12 Inch Vertical	EACH
658.0120	Traffic Signal Face 5-12 Inch Vertical	EACH
658.0215	Backplates Signal Face 3-12	EACH
658.0220	Backplates Signal Face 4-12	EACH
658.0225	Backplates Signal Face 5-12	EACH
658.0412	Pedestrian Signal Face 12-Inch	EACH
658.0416	Pedestrian Signal Face 16-Inch	EACH
658.0500	Pedestrian Push Buttons	EACH
658.0600 - 0629	LED Modules (size) (color) (type)	EACH
658.0630 - 0659	LED Modules Pedestrian Countdown Timer (size)	EACH
658.0660 - 0689	LED Modules Countdown Timer (size)	EACH
658.1100 - 1199	Programmable Traffic Signal Face (size) (vertical or horizontal)	EACH
658.5069	Sign Mounting Hardware (location)	LS

Standardized Special Provisions associated with this drawing:

STSP NUMBER	TITLE
NONE	

Other SDDs associated with this drawing:

SDD 9c11	Concrete Base Type 10
SDD 9c13	Concrete Base Type 10 and Type 13 Extension
SDD 12a4	Structure Identification Plaque (Required)

Design Notes:

SDD 9e8, sheet "e" (General Notes and Hardware Details for Type 9, 10, 12 and 13 Poles with Monotube Arms) is required.

Contact Person:

Ahmet Demirbilek (414) 220-6801

9E8 sheet b: Type 10 Pole 15'-30' Monotube Arm

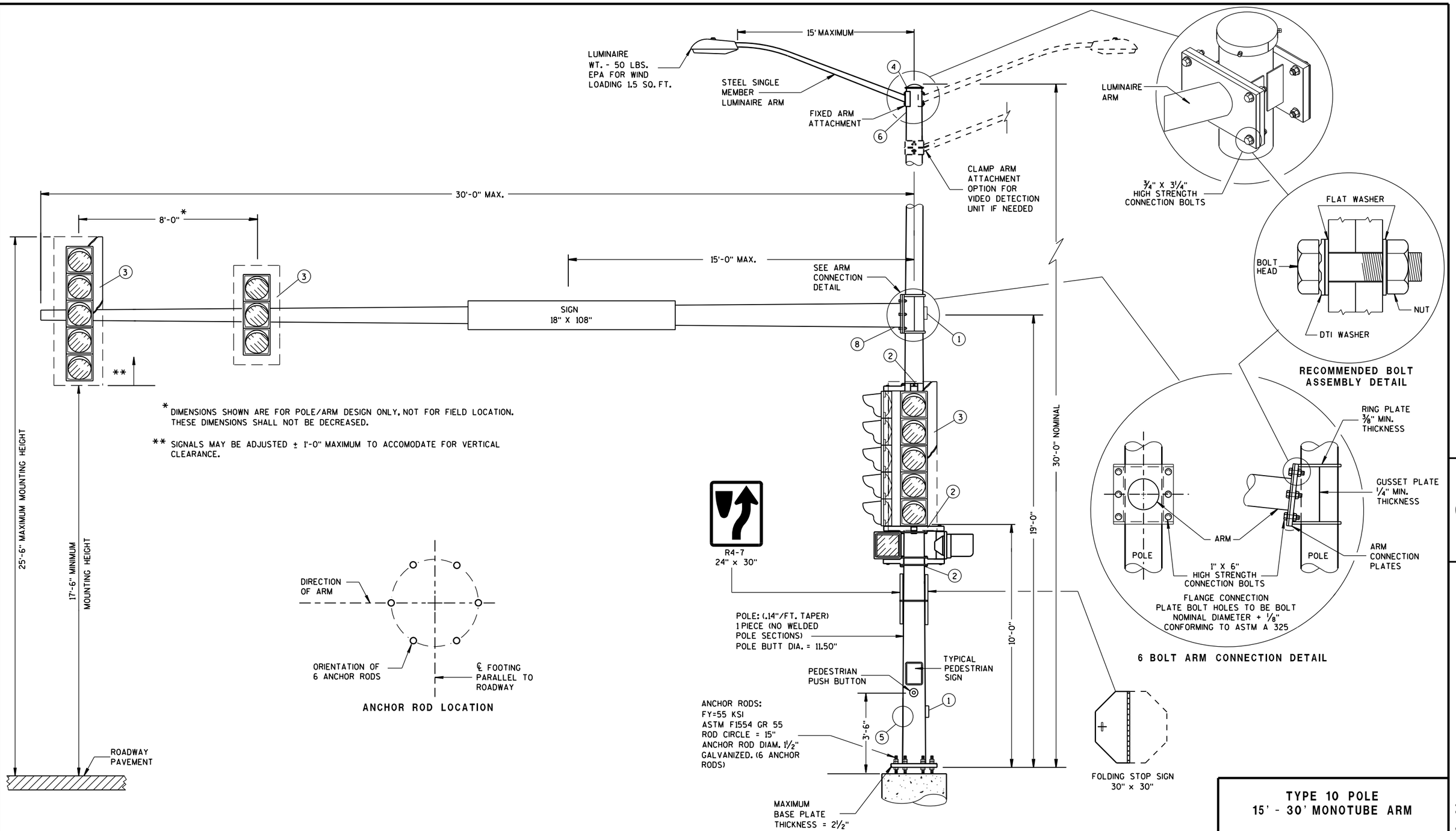

(MAXIMUM LOAD)

TYPE 10 POLE
15'- 30' MONOTUBE ARM

TYPE 10 POLE 15' - 30' MONOTUBE ARM
STATE OF WISCONSIN DEPARTMENT OF TRANSPORTATION
APPROVED May, 2016 — DATE /S/ Ahmet Demirbilek — STATE ELECTRICAL ENGINEER FHWA

6

S.D.D. 9 E 8-8b

6

S.D.D. 9 E 8-8b

Type 10 Pole 15'-30' Monotube Arm

References:

Standard Spec 641.3.1.2 for Anchor Rod Tightening
Standard Spec 657.2.2.6 for Bolts and Bolted Connections.
TSDM Monotube Signal Arm and Pole Structures 6-1-11

Bid items associated with this drawing:

ITEM NUMBER	TITLE	UNIT
654.0110	Concrete Base Type 10	EACH
655.0610	Electrical Wire Lighting 12 AWG	LF
657.1515 - 1530	Install Monotube Arms 15-FT to 30-FT	EACH
657.1806 - 1815	Install Luminaire Arms Steel 6-FT to 15-FT	EACH
658.0110	Traffic Signal Face 3-12 Inch Vertical	EACH
658.0115	Traffic Signal Face 4-12 Inch Vertical	EACH
658.0120	Traffic Signal Face 5-12 Inch Vertical	EACH
658.0215	Backplates Signal Face 3-12	EACH
658.0220	Backplates Signal Face 4-12	EACH
658.0225	Backplates Signal Face 5-12	EACH
658.0412	Pedestrian Signal Face 12-Inch	EACH
658.0416	Pedestrian Signal Face 16-Inch	EACH
658.0600 - 0629	LED Modules (size) (color) (type)	EACH
658.0630 - 0659	LED Modules Pedestrian Countdown Timer (size)	EACH
658.0660 - 0689	LED Modules Countdown Timer (size)	EACH
658.1100 - 1199	Programmable Traffic Signal Face (size) (vertical or horizontal)	EACH
658.0500	Pedestrian Push Buttons	EACH
658.5069	Signal Mounting Hardware	EACH
659.1100-1199	Luminaries Utility LED (Category)	EACH

Standardized Special Provisions associated with this drawing:

STSP NUMBER	TITLE
NONE	

Other SDDs associated with this drawing:

SDD 9c11	Concrete Base Type 10
SDD 9c13	Concrete Base Type 10 and Type 13 Extension
SDD 12a4	Structure Identification Plaque (Required)

Design Notes:

SDD 9e8, sheet "e" (General Notes and Hardware Details for Type 9, 10, 12 and 13 Poles with Monotube Arms) is required.

Contact Person:

Ahmet Demirbilek (414) 220-6801

9E8 sheet c: Type 12 Pole 35'-55' Monotube Arm

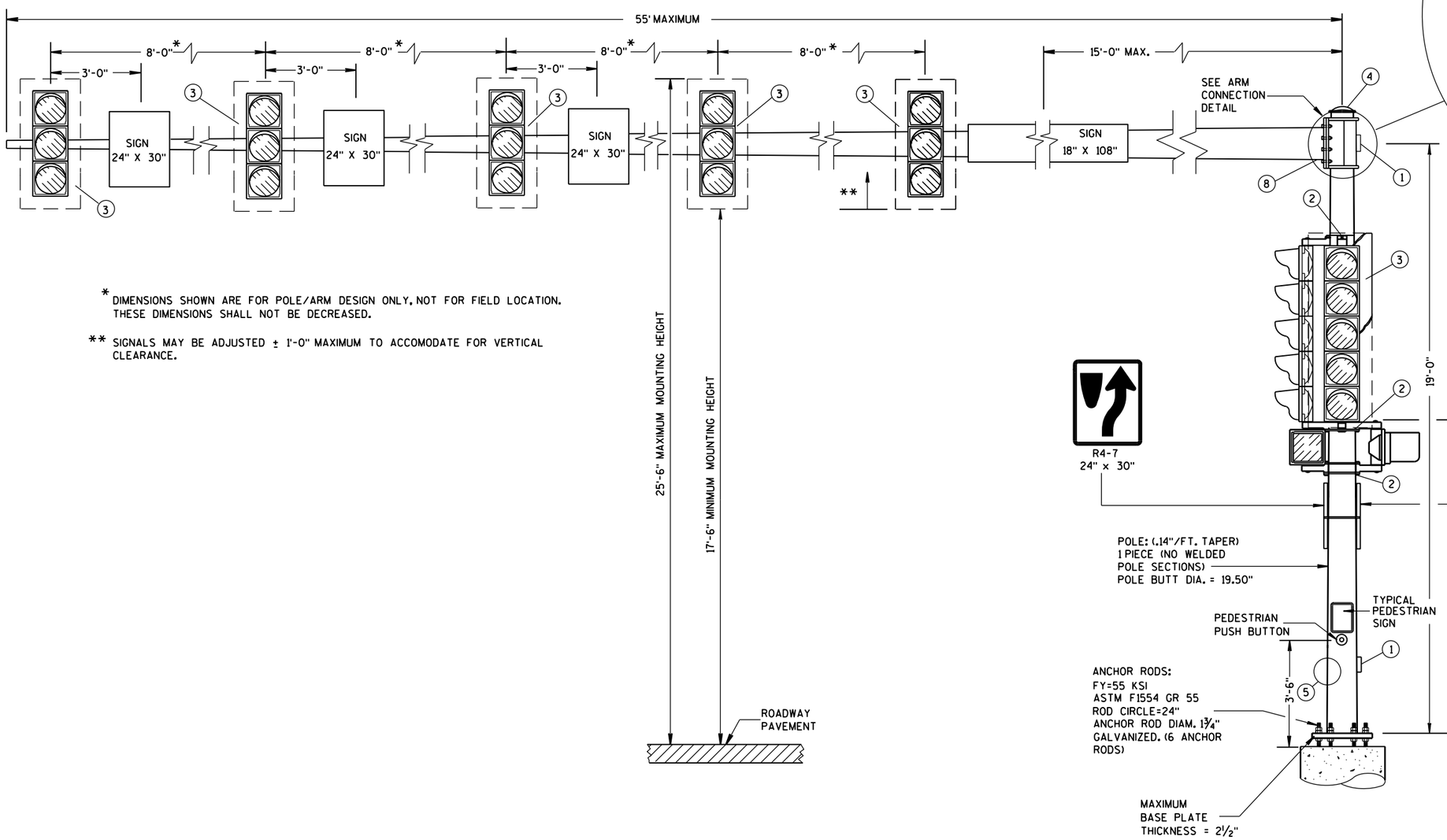

* DIMENSIONS SHOWN ARE FOR POLE/ARM DESIGN ONLY, NOT FOR FIELD LOCATION. THESE DIMENSIONS SHALL NOT BE DECREASED.

** SIGNALS MAY BE ADJUSTED ± 1'-0" MAXIMUM TO ACCOMODATE FOR VERTICAL CLEARANCE.

(MAXIMUM LOAD)

TYPE 12 POLE 35'- 55' MONOTUBE ARM

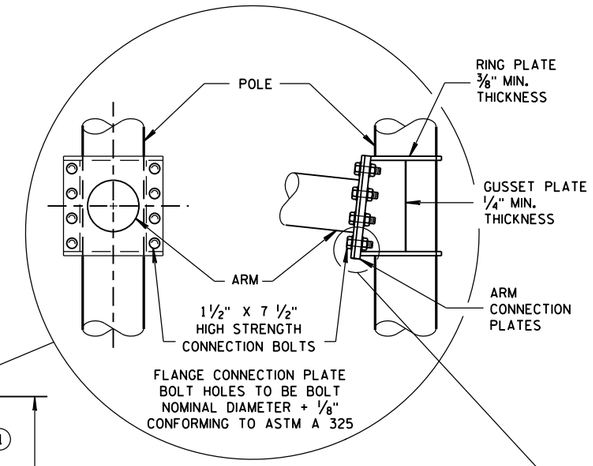

8 BOLT ARM CONNECTION DETAIL

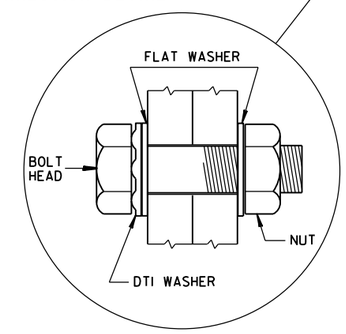

RECOMMENDED BOLT ASSEMBLY DETAIL

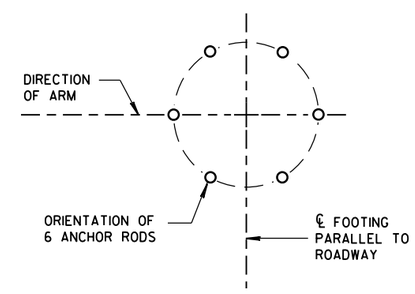

ANCHOR ROD LOCATION

TYPE 12 POLE 35' - 55' MONOTUBE ARM

STATE OF WISCONSIN
DEPARTMENT OF TRANSPORTATION

APPROVED
May, 2015
DATE

/S/ Ahmet Demirbilek
STATE ELECTRICAL ENGINEER

FHWA

6

S.D.D. 9 E 8-8c

Type 12 Pole 35'-55' Monotube Arm

References:

Standard Spec 641.3.1.2 for Anchor Rod Tightening
Standard Spec 657.2.2.6 for Bolts and Bolted Connections.
TSDM Monotube Signal Arm and Pole Structures 6-1-11

Bid items associated with this drawing:

ITEM NUMBER	TITLE	UNIT
654.0113	Concrete Base Type 13	EACH
657.1535 - 1555	Install Monotube Arms 35-FT to 55-FT	EACH
658.0110	Traffic Signal Face 3-12 Inch Vertical	EACH
658.0115	Traffic Signal Face 4-12 Inch Vertical	EACH
658.0120	Traffic Signal Face 5-12 Inch Vertical	EACH
658.0215	Backplates Signal Face 3-12	EACH
658.0220	Backplates Signal Face 4-12	EACH
658.0225	Backplates Signal Face 5-12	EACH
658.0215 - 0290	Backplates Single Face (# section)(size)	EACH
658.0412	Pedestrian Signal Face 12-Inch	EACH
658.0416	Pedestrian Signal Face 16-Inch	EACH
658.0500	Pedestrian Push Buttons	EACH
658.0600 - 0629	LED Modules (size) (color) (type)	EACH
658.0630 - 0659	LED Modules Pedestrian Countdown Timer (size)	EACH
658.0660 - 0689	LED Modules Countdown Timer (size)	EACH
658.1100 - 1199	Programmable Traffic Signal Face (size) (vertical or horizontal)	EACH
658.5069	Signal Mounting Hardware (location)	LS

Standardized Special Provisions associated with this drawing:

STSP NUMBER	TITLE
NONE	

Other SDDs associated with this drawing:

SDD 9c12	Concrete Base Type 13 sheets "a" and "b"
SDD 9c13	Concrete Base Type 10 and Type 13 Extension
SDD 12a4	Structure Identification Plaque (Required)

Design Notes:

SDD 9e8, sheet "e" (General Notes and Hardware Details for Type 9, 10, 12 and 13 Poles with Monotube Arms) is required.

Contact Person:

Ahmet Demirbilek (414) 220-6801

9E8 sheet d: Type 13 Pole 35'-55' Monotube Arm

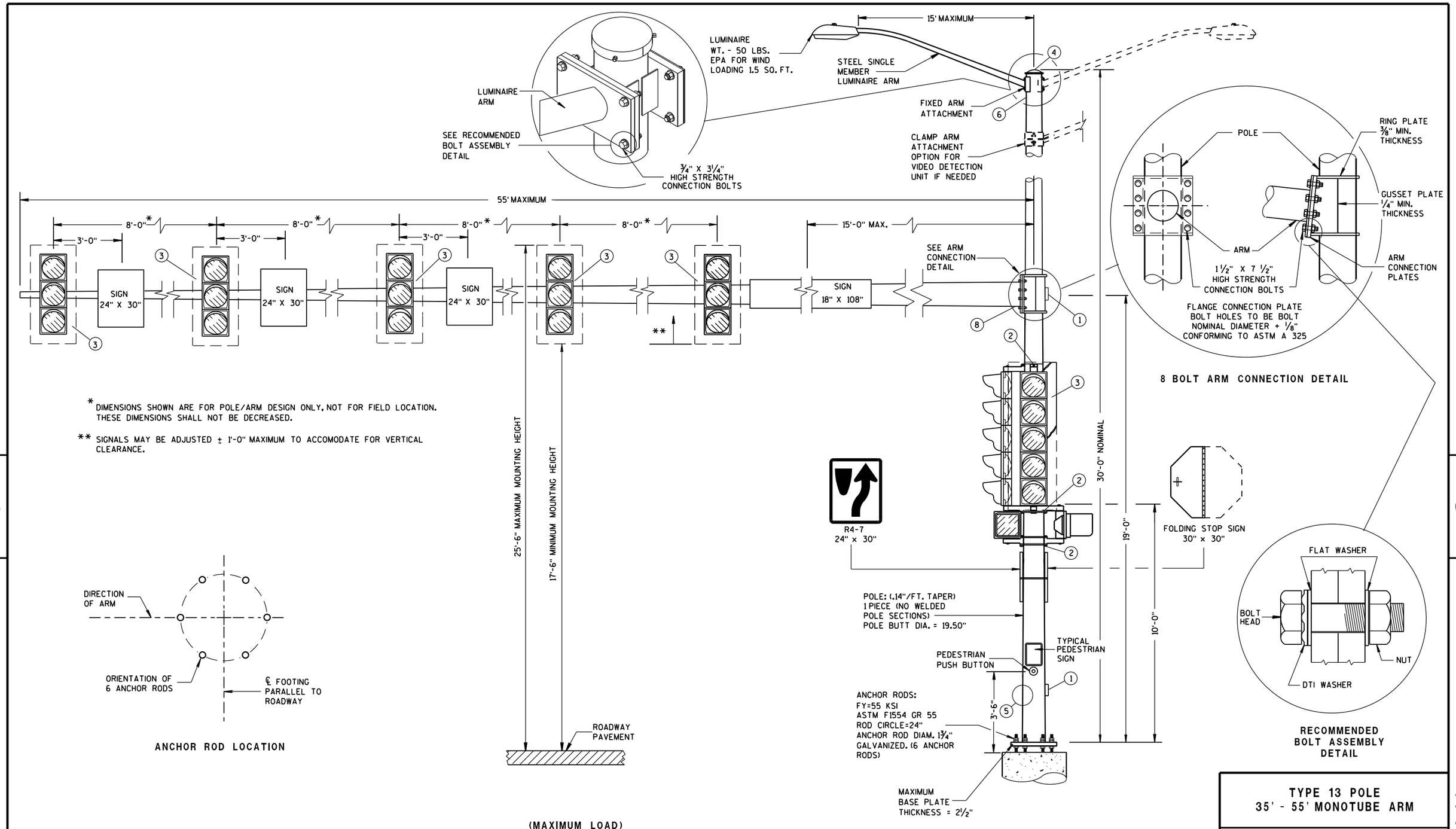

(MAXIMUM LOAD)

TYPE 13 POLE 35'- 55' MONOTUBE ARM

TYPE 13 POLE 35' - 55' MONOTUBE ARM
STATE OF WISCONSIN DEPARTMENT OF TRANSPORTATION
APPROVED May 2016 — DATE /S/ Ahmet Demirbilek — STATE ELECTRICAL ENGINEER FHWA

6

S.D.D. 9 E 8-8d

Type 13 Pole 35'-55' Monotube Arm

References:

Standard Spec 641.3.1.2 for Anchor Rod Tightening
Standard Spec 657.2.2.6 for Bolts and Bolted Connections.
TSDM Monotube Signal Arm and Pole Structures 6-1-11

Bid items associated with this drawing:

ITEM NUMBER	TITLE	UNIT
654.0113	Concrete Base Type 13	EACH
655.0610	Electrical Wire Lighting 12 AWG	LF
657.1535 - 1555	Install Monotube Arms 35-FT to 55-FT	EACH
657.1806 - 1815	Install Luminaire Arms Steel 6-FT to 15-FT	EACH
658.0110	Traffic Signal Face 3-12 Inch Vertical	EACH
658.0115	Traffic Signal Face 4-12 Inch Vertical	EACH
658.0120	Traffic Signal Face 5-12 Inch Vertical	EACH
658.0215	Backplates Signal Face 3-12	EACH
658.0220	Backplates Signal Face 4-12	EACH
658.0225	Backplates Signal Face 5-12	EACH
658.0412	Pedestrian Signal Face 12-Inch	EACH
658.0416	Pedestrian Signal Face 16-Inch	EACH
658.0500	Pedestrian Push Buttons	EACH
658.0600 - 0629	LED Modules (size) (color) (type)	EACH
658.0630 - 0659	LED Modules Pedestrian Countdown Timer (size)	EACH
658.0660 - 0689	LED Modules Countdown Timer (size)	EACH
658.1100 - 1199	Programmable Traffic Signal Face (size) (vertical or horizontal)	EACH
658.5069	Signal Mounting Hardware (location)	LS
659.1100-1199	Luminaries Utility LED (Category)	EACH

Standardized Special Provisions associated with this drawing:

STSP NUMBER	TITLE
NONE	

Other SDDs associated with this drawing:

SDD 9c12	Concrete Base Type 13 sheets "a" and "b"
SDD 9c13	Concrete Base Type 10 and Type 13 Extension
SDD 12a4	Structure Identification Plaque (Required)

Design Notes:

SDD 9e8, sheet "e" (General Notes and Hardware Details for Type 9, 10, 12 and 13 Poles with Monotube Arms) is required.

Contact Person:

Ahmet Demirbilek (414) 220-6801

9E8 sheet e: General Notes and Hardware Details for Type 9, 10, 12 and 13 Poles with Monotube Arms

GENERAL NOTES

DETAILS OF CONSTRUCTION, MATERIALS AND WORKMANSHIP NOT SHOWN ON THIS DRAWING SHALL CONFORM TO THE PERTINENT REQUIREMENTS OF THE CONTRACT.

POLE TYPES 9 AND 10 ARE FOR ARM LENGTHS 15-FOOT TO 30-FOOT.

POLE TYPES 12 AND 13 ARE FOR ARM LENGTHS 35-FOOT TO 55-FOOT.

MONOTUBE POLE AND ARM SHALL BE GALVANIZED STEEL.

RING-STIFFENED BUILT-UP BOX TYPE OF ATTACHMENT FOR TRAFFIC SIGNAL ARM.

ONE (1) PIECE POLE CONSTRUCTION (NO WELDED POLE SECTIONS).

STANDARD STRAIGHT ARM DESIGN (3 % ± RISE).

SECTION 657, POLES OF THE STANDARD SPECIFICATIONS SHALL APPLY TO THIS DRAWING.

PROVIDE WIREWAY THRU POLE WALL AND ARM CONNECTION PLATES. PROVIDE ROUND, SMOOTH INSIDE SURFACE.

MANUFACTURER'S SUBMITTED POLE DESIGNS AND DRAWINGS SHALL BE SIGNED AND STAMPED BY A REGISTERED PROFESSIONAL ENGINEER AND CERTIFIED AS BEING IN COMPLIANCE WITH THE AASHTO 2013 6TH EDITION AND ALL PERTINENT WISDOT SPECIFICATIONS AND DRAWINGS FOR TRAFFIC AND LIGHTING STRUCTURES AND AS FOLLOWS:

- CATEGORY III FATIGUE LOADS OF GALLOPING, TRUCK GUSTS (AT 45 MPH VEHICLE VELOCITY) AND NATURAL WIND GUSTS FOR DESIGN OF TYPE 9 AND TYPE 10 STRUCTURES.
- CATEGORY II FATIGUE LOADS OF GALLOPING, TRUCK GUSTS (AT 45 MPH VEHICLE VELOCITY) AND NATURAL WIND GUSTS FOR DESIGN OF TYPE 12 AND TYPE 13 STRUCTURES.
- 90 MPH (3-SECOND GUST) WIND SPEED AND A 50 YEAR DESIGN LIFE.

SECURE THE OPENING BELOW THE BASE PLATE WITH STAINLESS STEEL OR GALVANIZED STEEL MESH AND SECURE THE MESH WITH ¾" S.S. BANDING AROUND THE LEVELING NUTS.

INDENT PRINT (NOMINAL ½" HIGH) THE POLE LENGTH AND FIRST TWO LETTERS OF THE MANUFACTURERS NAME ON TWO SIDES OF THE BASE PLATE 180 DEGREES APART, BEFORE GALVANIZING. THE ARM SHALL BE IDENTIFIED WITH THE SAME INFORMATION BY INDENT PRINT.

SIGNAL FACE SHALL BE MOUNTED 6 INCHES (NOMINAL) FROM THE END OF THE MONOTUBE ARM OR AS SHOWN ON THE PLAN CONSTRUCTION DETAIL OR AS DIRECTED BY THE PROJECT ENGINEER/ELECTRICAL OPERATIONS PERSONNEL. MOUNT ALL LIKE HEADS AT SAME ELEVATION.

SIGN MOUNTING BRACKETS SHALL BE FURNISHED IN ACCORDANCE WITH SECTION 637 OF THE STANDARD SPECIFICATIONS FOR HIGHWAY AND STRUCTURE CONSTRUCTION.

(1) DESIGN FOR MAXIMUM ALLOWABLE HANDHOLE WITH COVER ASSEMBLY WITH TWO ¼" X ¾" - 20 TPI STAINLESS STEEL HEX HEAD BOLTS.

(2) SIGNAL MOUNTING BRACKETS FOR POLE MOUNTING, MOUNT WITH CAP SCREW AND BANDING. (SEE SPECIFICATIONS SEC. 658).

(3) SECURELY MOUNT BACKPLATES, PROJECTING 5" BEYOND ALL SIDES OF THE SIGNAL FACE HOUSING, PER MANUFACTURERS RECOMMENDATIONS.

(4) THE TOP OF THE POLE SHAFT AND THE END OF THE MONOTUBE ARM SHALL BE EQUIPPED WITH A REMOVABLE, VENTILATED CAP HELD SECURELY IN PLACE WITH SET SCREWS.

(5) FACTORY-WELDED BRACKET FOR GROUNDING LUG, OPPOSITE HANDHOLE. (LUG AND HARDWARE PAID UNDER SEPARATE ITEM). PROVIDE HOLE IN BRACKET FOR ¼" X ¾" - 20 TPI STAINLESS STEEL HEX HEAD BOLT.

(6) FACTORY-WELDED "J" HOOK FOR STRAIN RELIEF FOR POLE LUMINAIRE WIRE.

(7) INSTALL STRUCTURAL IDENTIFICATION PLAQUES.

STRUCTURAL IDENTIFICATION PLAQUES SHALL BE PLACED ON THE POLES IN THE SAME DIRECTION AS THE ARM.

MOUNTING HEIGHT SHALL BE 6'-0" ABOVE THE CURB OR SHOULDER. ADJUST IF IT IS KNOWN THAT REQUIRED TRAFFIC SIGNS WILL BE OBSTRUCTED.

(8) FACTORY DRILLED ½" DRAIN HOLE 2" FROM FLANGE CONNECTION PLATE.

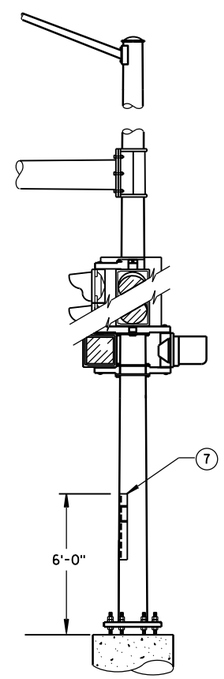

STRUCTURAL IDENTIFICATION PLAQUE PLACEMENT

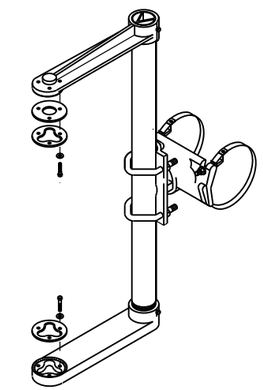

SIGNAL FACE MOUNTING BRACKET DETAIL FOR MONOTUBE ARM

(MOUNT PER MANUFACTURER'S RECOMMENDATION)

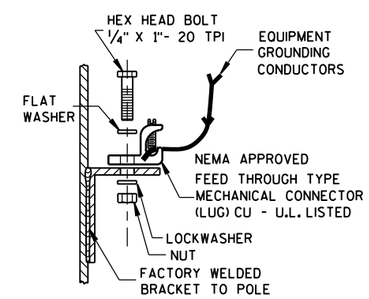

TYPICAL GROUNDING CONNECTIONS (5)

NUT, BOLT AND WASHERS SHALL BE STAINLESS STEEL

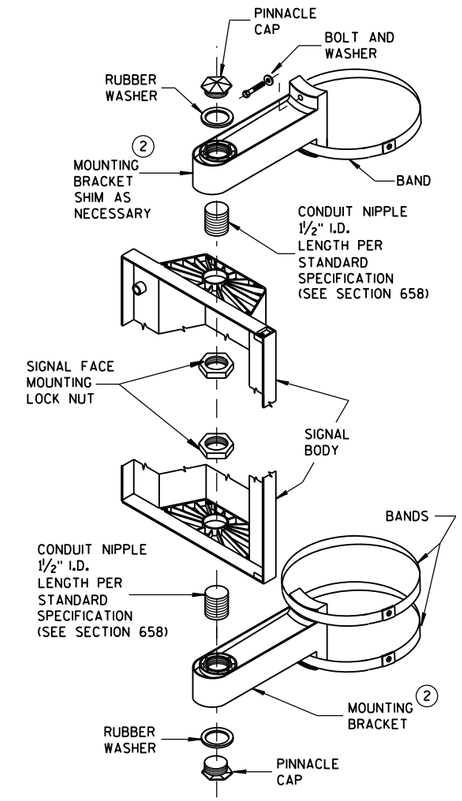

SIGNAL FACE VERTICAL MOUNTING DETAIL

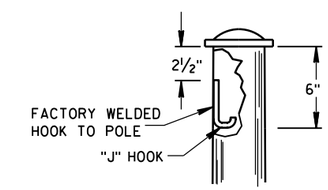

"J" HOOK WIRE SUPPORT (6)

GENERAL NOTES AND HARDWARE DETAILS FOR TYPE 9, 10, 12 & 13 POLES WITH MONOTUBE ARMS	
STATE OF WISCONSIN DEPARTMENT OF TRANSPORTATION	
APPROVED May 2016 DATE	/S/ Ahmet Demirbilek STATE ELECTRICAL ENGINEER
FHWA	

6

6

S.D.D. 9 E 8-8e

S.D.D. 9 E 8-8e

General Notes and Hardware Details for Type 9, 10, 12 and 13 Poles with Monotube Arms

References:

NONE

Bid items associated with this drawing:

ITEM NUMBER	TITLE	UNIT
NONE		

Standardized Special Provisions associated with this drawing:

STSP NUMBER	TITLE
NONE	

Other SDDs associated with this drawing:

NONE

Design Notes:

Include this sheet with all pole and monotube combinations in this drawing series (SDD 9e8 Sheets a, b, c, and d).

Contact Person:

Ahmet Demirbilek (414) 220-6801