HANDHOLE FUSE SCHEDULES

LINE VOLTAGE ϕ-ϕ	BALLAST WATTAGE 70-200 W	BALLAST WATTAGE 250-400 W
240 VAC	2P-5 A	2P-5 A
480 VAC	2P-5 A	2P-5 A

GENERAL NOTES

DETAILS OF CONSTRUCTION AND WORKMANSHIP NOT SHOWN IN THIS DRAWING SHALL CONFORM TO THE PERTINENT REQUIREMENTS OF THE CONTRACT.

USE THIS DETAIL IN CONJUNCTION WITH THE DETAIL FOR ELECTRICAL HANDHOLE WIRING.

WIRING FOR SINGLE LUMINAIRE POLES IS SHOWN WITH SOLID LINES. WIRING FOR THE SECOND LUMINAIRE OF TWIN LUMINAIRE POLES IS SHOWN WITH DOTTED LINES.

THE PLANS WILL SHOW WHICH CIRCUIT LEG(S) ARE CONNECTED TO EACH INSTALLATION.

WIRE SIZE FROM THE JUNCTION BOX TO THE POLE HANDHOLE SHALL EQUAL THE SIZE OF THE POLE WIRE.

THE INTENT OF JUNCTION BOX SPLICES AS SHOWN IN THIS DETAIL IS FOR LIGHTING SYSTEMS WITH HEAVY LINE WIRE TOO LARGE TO PULL THROUGH THE CONDUIT INTO THE POLE HANDHOLE. DUE TO CONDUIT FILL REQUIREMENTS OF N.E.C., AND/OR THE STIFFNESS OF THE WIRE COMPARED TO THE NUMBER OF BENDS IN THE CONDUIT. IN CASES WHERE LINE WIRE IS LIGHTER, SUCH AS SMALLER SYSTEMS OR TOWARD THE FURTHEST END OF A LARGER SYSTEM, PULL THE LINE WIRE INTO THE POLE HANDHOLE FOR SPLICING.

LEGEND

A,B,X,Y,Z	UNGROUNDED CIRCUIT CONDUCTORS
N	GROUNDED CIRCUIT CONDUCTORS
GND	EQUIPMENT GROUNDING CONDUCTOR
P	POLE (ELECTRICAL CIRCUIT)
ϕ	PHASE (ELECTRICAL CURRENT)
	HANDHOLE GROUND LUG
	SINGLE-POLE (1P) FUSE ASSEMBLY
	TWO-POLE (2P) FUSE ASSEMBLY
	UNFUSED LUMINAIRE
	EQUIPMENT GROUNDING ELECTRODE
	TERMINAL
	SPLICE
	CONDUCTOR
	EXOTHERMIC WELD

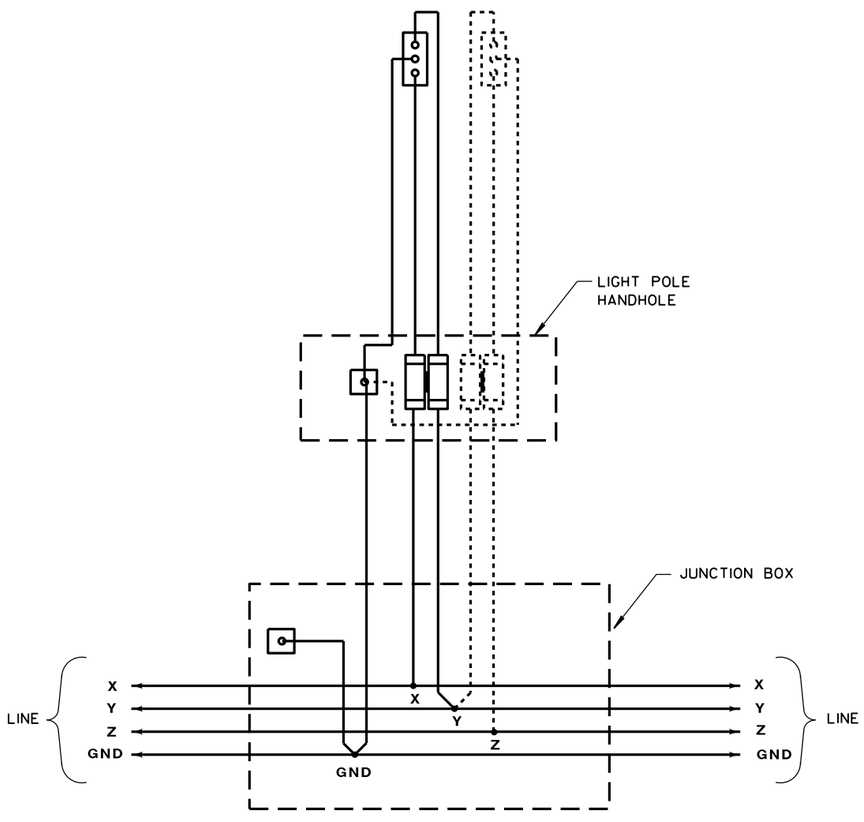

TYPICAL WIRING DIAGRAM
PHASE - TO - PHASE DELTA SYSTEM
3-ϕ 480VAC 3 WIRE

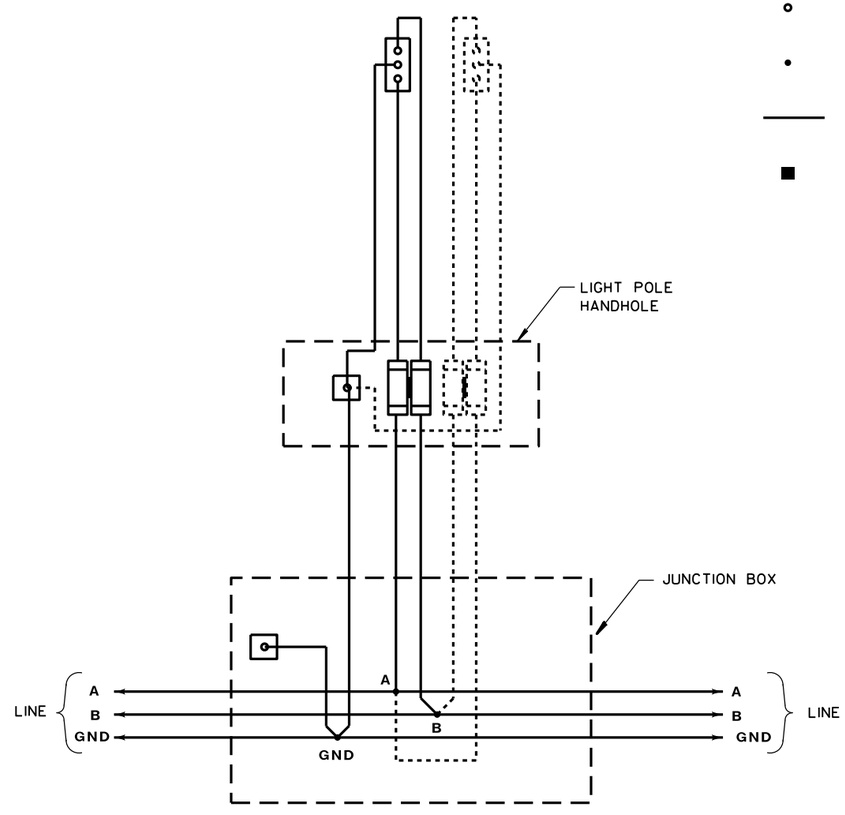

TYPICAL WIRING DIAGRAM
UNGROUNDED SYSTEM
1-ϕ 120 - 120VAC 2 WIRE

ELECTRICAL DETAILS
STRUCTURE MOUNT LIGHT POLES
PHASE-TO-PHASE SYSTEMS

STATE OF WISCONSIN
DEPARTMENT OF TRANSPORTATION

APPROVED
10/25/2010 — DATE
/S/ John Corbin — STATE ELECTRICAL ENGINEER FOR HWYS
FHWA

6
S.D.D. 10 A 10-2

Electrical Details Structure Mount Light Poles Phase-to-Phase Systems

References:

NONE

Bid items associated with this drawing:

ITEM NUMBER	DESCRIPTION	UNIT
659.1100 - 1199	Luminaires Utility LED (Category)	EACH

Standardized Special Provisions associated with this drawing:

STSP NUMBER	TITLE
NONE	

Other SDDs associated with this drawing:

SDD10a1 Electrical Handhole Wiring

Design Notes:

Phase-to-Phase systems are used on some municipally-owned structures. The Detail shows double-fused luminaries. Use this SDD in conjunction with the SDD for Electrical Handhole Wiring.

Contact Person:

Ahmet Demirbilek (414) 220-6801