13C18 sheet a: Concrete Pavement Jointing

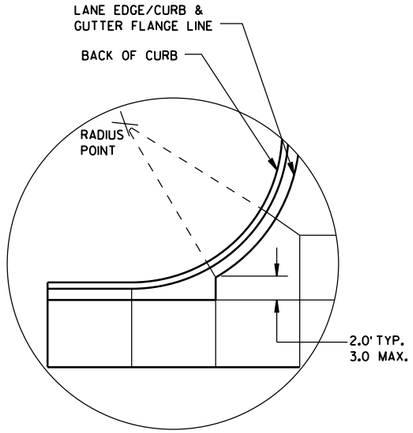

DETAIL "A"

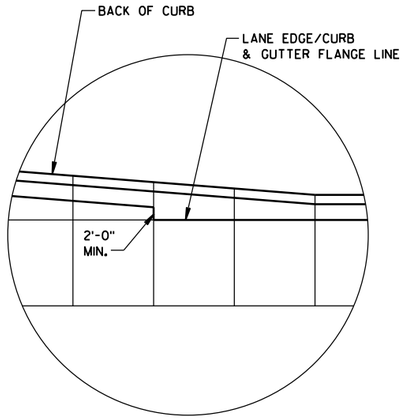

DETAIL "B"

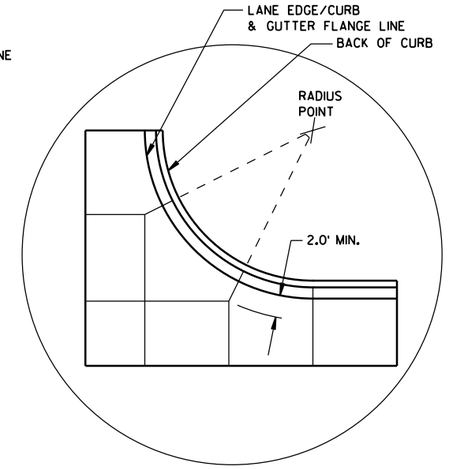

DETAIL "C"

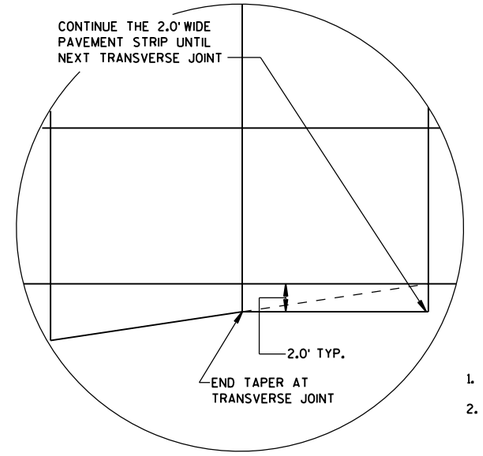

DETAIL "D"

GENERAL NOTES

THE PRIMARY ROADWAY CONTROLS THE TRANSVERSE JOINT PATTERN.

ALIGN NEW JOINTS WITH EXISTING JOINTS OR CRACKS.

CONSTRUCT TRANSVERSE JOINTS PERPENDICULAR TO THE ROADWAY.

ADJUST TRANSVERSE JOINTS TO ALIGN WITH UTILITY FIXTURES (E.G. MANHOLES AND INLETS) IN THE PAVEMENT STRUCTURE WHEN POSSIBLE. WATER VALVES DO NOT REQUIRE JOINT ADJUSTMENT.

AVOID SLABS LESS THAN 2 FEET WIDE OR GREATER THAN 15 FEET WIDE.

SEE TABLE FOR TRANSVERSE JOINT SPACING. JOINT SPACING SPECIFIED IS MAXIMUM AND ACTUAL SPACING CAN BE ADJUSTED TO ACCOMMODATE INTERSECTIONS.

AVOID ANGLES LESS THAN 60° BY DOGLEGGING JOINTS THROUGH CURVE RADIUS POINTS. USE 90° ANGLES WHEN POSSIBLE.

CORRELATE LONGITUDINAL JOINTS WITH LANE LINES WHEN POSSIBLE.

1. PROVIDE TRANSVERSE JOINTS AT ALL PAVEMENT WIDTH CHANGES.
2. CONSTRUCT DOWELED EXPANSION JOINT ON THE SIDE ROAD OF AN INTERSECTION IF THE SIDE ROAD IS CONCRETE PAVEMENT AND GREATER THAN 300 FEET IN LENGTH. ALIGN EXPANSION JOINT WITH EDGE OF RADIUS.
3. THE ENGINEER MAY APPROVE SLIGHT VARIATIONS FROM THESE JOINTING DETAILS.

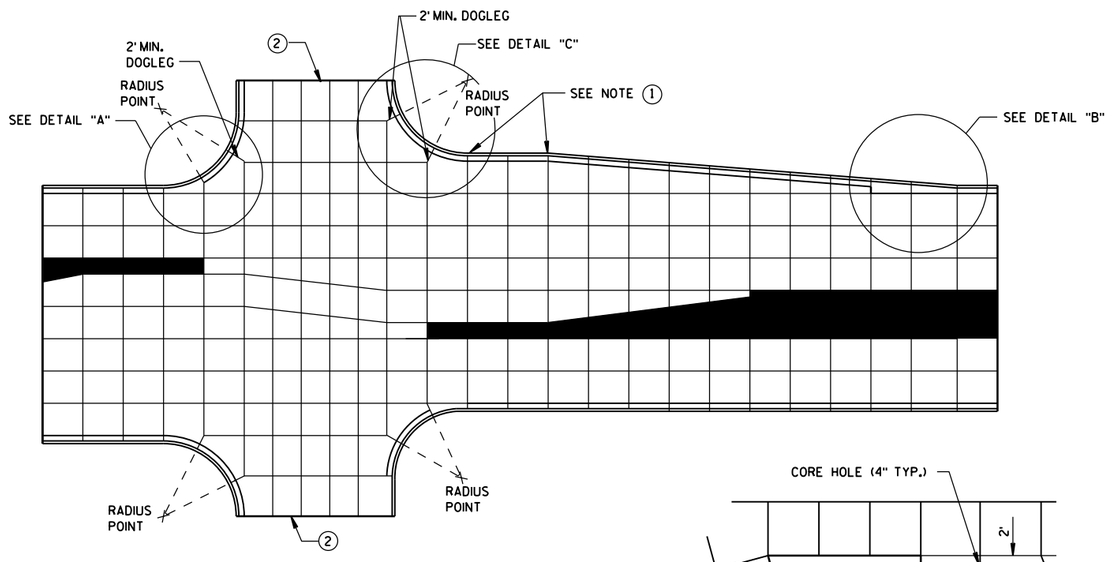

STANDARD INTERSECTION

PAVEMENT DEPTH AND JOINT SPACING TABLE

PAVEMENT DEPTH (D)	CONTRACTION JOINT SPACING
6", 6½"	12'
7", 7½"	14'
8" & ABOVE	15'

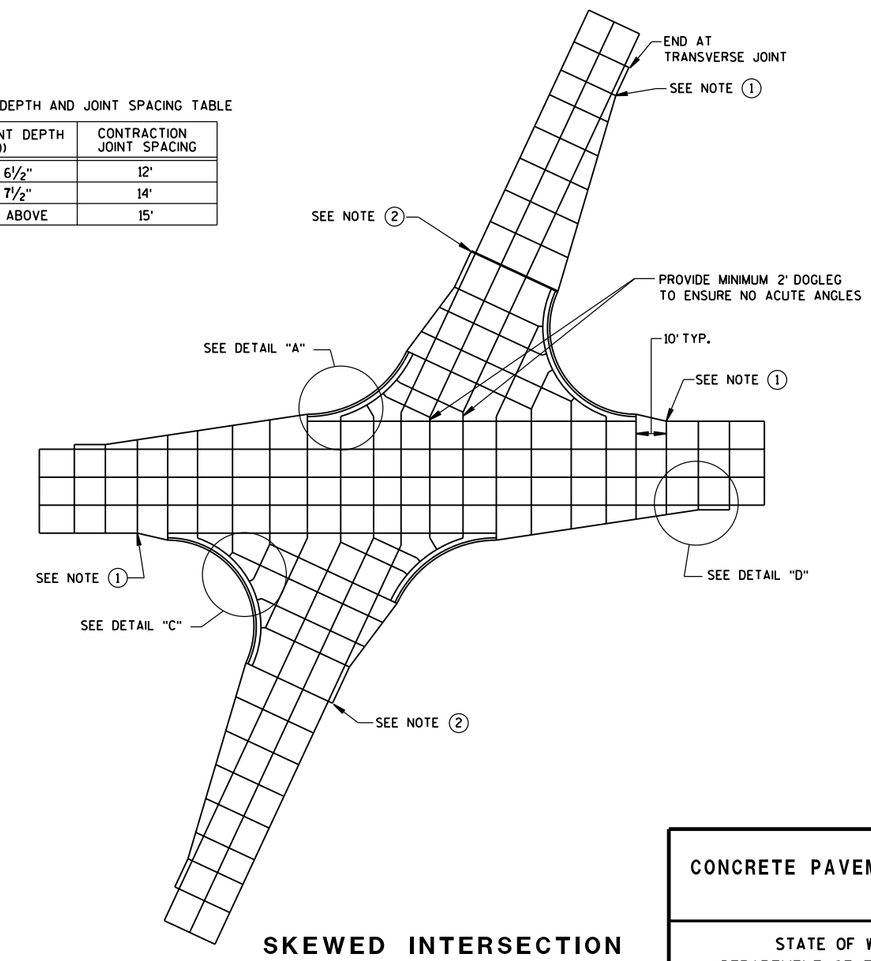

SKEWED INTERSECTION

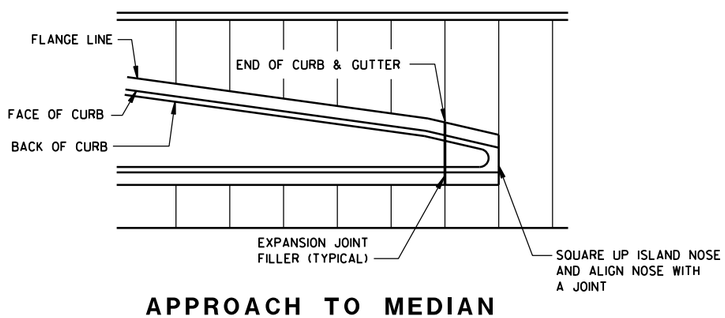

APPROACH TO MEDIAN

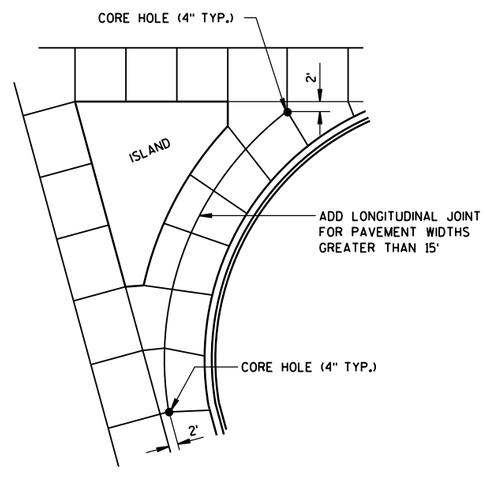

LARGE RIGHT TURN

CONCRETE PAVEMENT JOINTING

STATE OF WISCONSIN
DEPARTMENT OF TRANSPORTATION

6

6

S.D.D. 13 C 18-4a

S.D.D. 13 C 18-4a

LEGEND

- POTENTIAL DOWELED EXPANSION JOINT
- DOWELED JOINT
- TIED JOINT

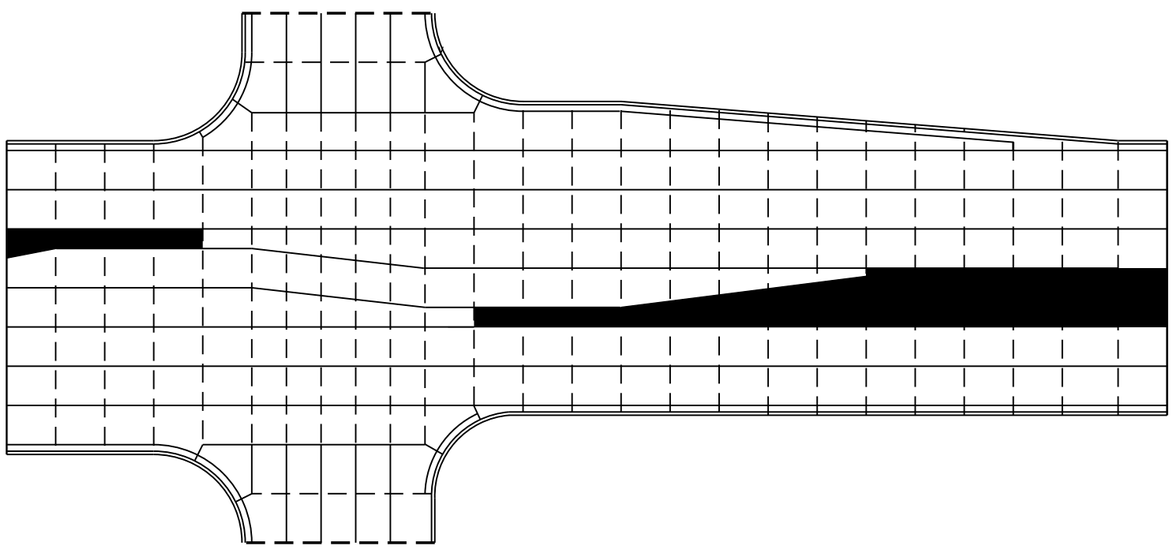

STANDARD INTERSECTION

GENERAL NOTES

USE AN EXPANSION JOINT FILLER MEETING THE REQUIREMENTS OF STANDARD SPECIFICATION 415.

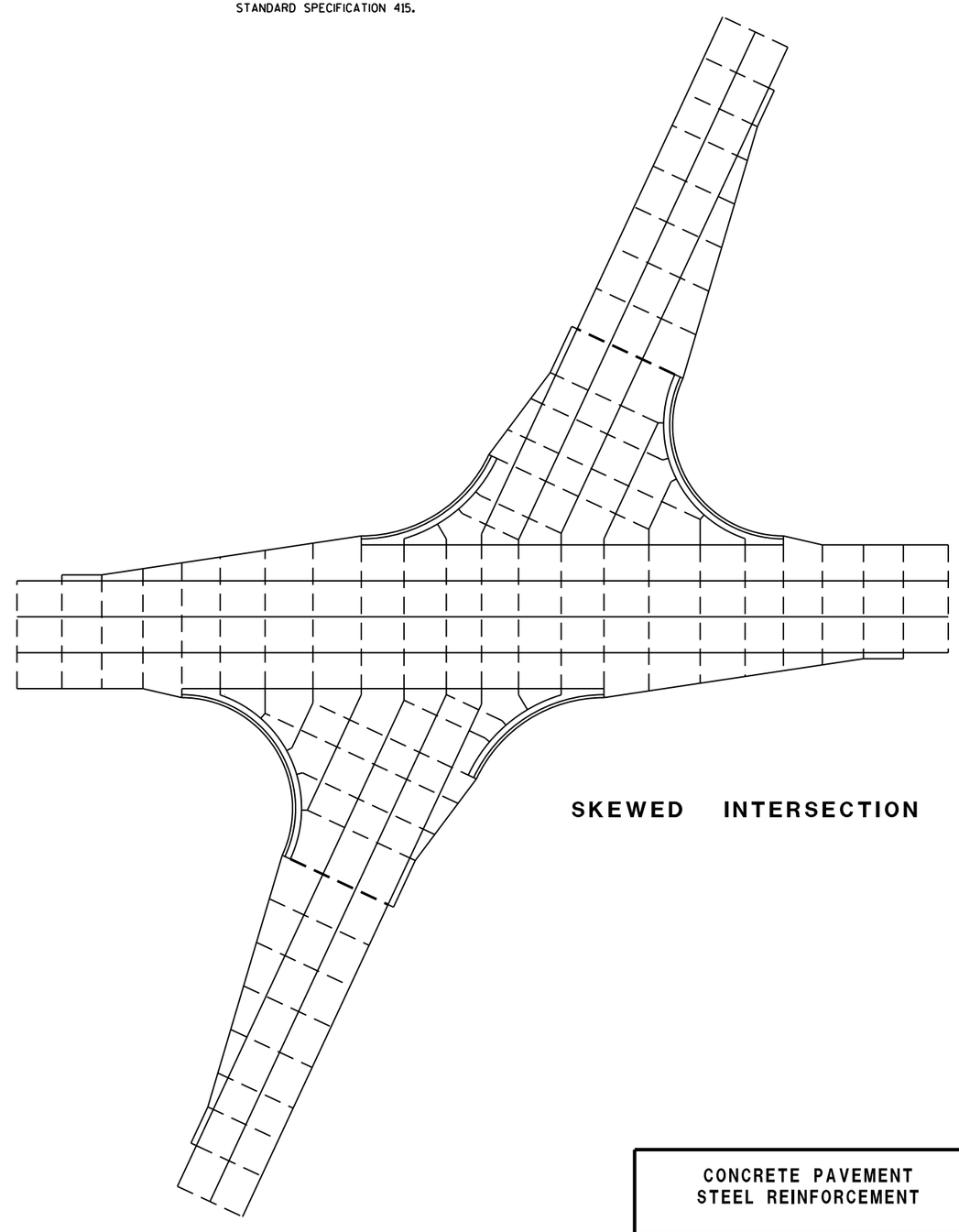

SKEWED INTERSECTION

6

6

CONCRETE PAVEMENT
STEEL REINFORCEMENT

STATE OF WISCONSIN
DEPARTMENT OF TRANSPORTATION

S.D.D. 13 C 18-4b

13C18 sheet c: Concrete Pavement Joint Types

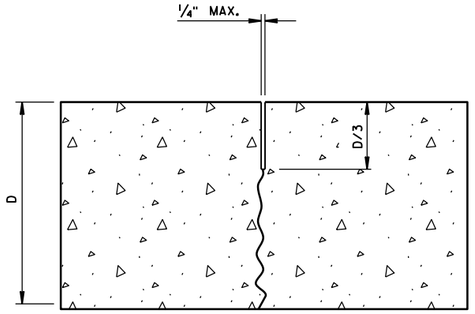

UNDOWELED-TRANSVERSE

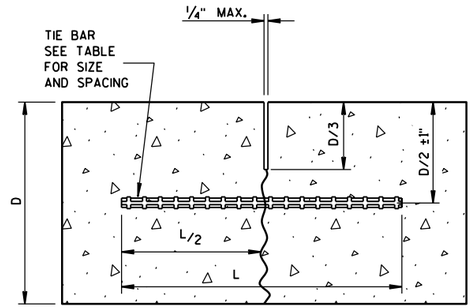

TIED LONGITUDINAL

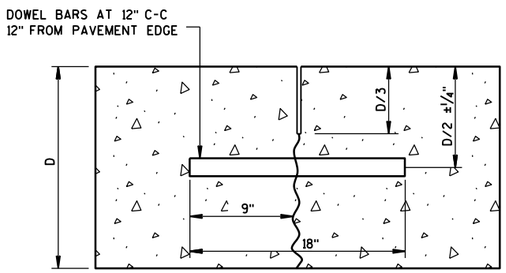

DOWELED-TRANSVERSE

CONTRACTION JOINTS

SEE NOTE (2)

TIE BAR TABLE

PAVEMENT DEPTH (D)	TIE BAR SIZE	TIE BAR LENGTH (L)	MAX. TIE BAR SPACING
< 10 1/2"	NO. 4	30"	36"
≥ 10 1/2"	NO. 5	36"	36"
	NO. 4 *	30"	24" **

* SUBSTITUTE BENT BARS AT LONGITUDINAL JOINTS WHEN EQUIPMENT LIMITATIONS DURING CONSTRUCTION WARRANT (e.g. AUXILIARY LANES OR TURN LANES)

** CONFORM TO 15" MINUMUM SPACING FROM TRANSVERSE JOINTS; SPACING BETWEEN TIE BARS WILL BE 30" AT TRANSVERSE JOINTS.

GENERAL NOTES

1. USE DOWELED EXPANSION JOINTS ON SIDE ROADS AT INTERSECTIONS (TO ISOLATE THE SIDE ROAD FROM THE THROUGH STREET) IF THE SIDE ROAD IS CONCRETE PAVEMENT AND GREATER THAN 300 FEET IN LENGTH.
2. SPACE CONTRACTION JOINTS IN ACCORDANCE WITH 13C4, 13C11 OR 13C13.
3. LOCATE CONSTRUCTION JOINTS A MINIMUM OF 6 FEET FROM THE NEAREST CONTRACTION JOINT AND ALIGN PARALLEL TO CONTRACTION JOINTS.
4. CONSTRUCTION JOINTS CAN BE FORMED OR SAWED.
5. IF JOINT IS FORMED, PROVIDE A 1/4-INCH RADIUS.
6. ANCHOR TIE BARS INTO DRILLED HOLES WITH AN EPOXY.

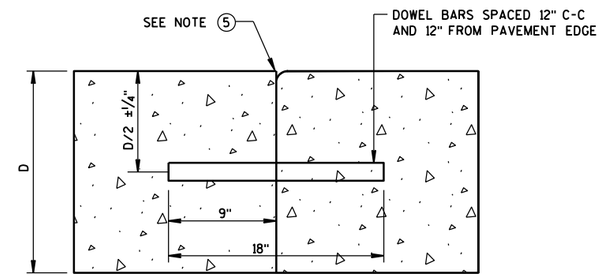

DOWELED TRANSVERSE (3)

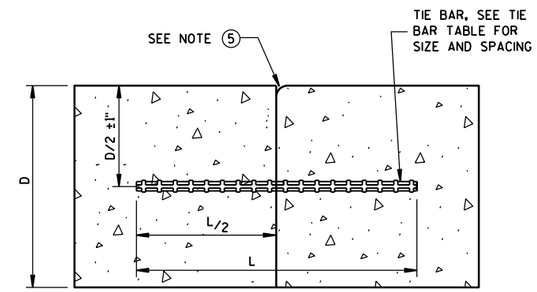

TIED LONGITUDINAL

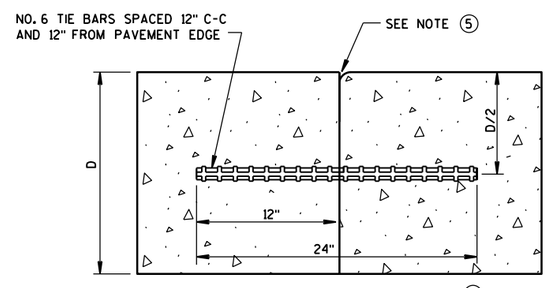

TIED TRANSVERSE (3)

(FOR USE ON NON-DOWELED PAVEMENTS ONLY)

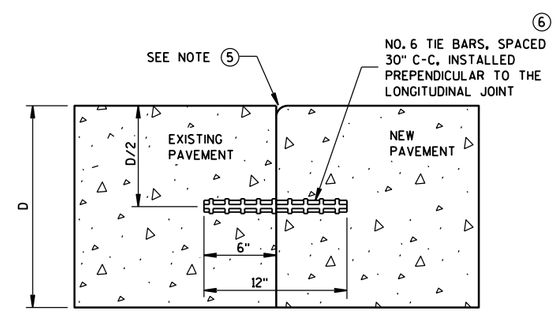

TIED LONGITUDINAL TO EXISTING

CONSTRUCTION JOINTS

SEE NOTE (4)

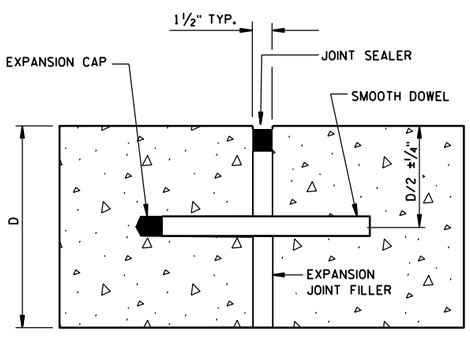

DOWELED-TRANSVERSE

SEE NOTE (1)

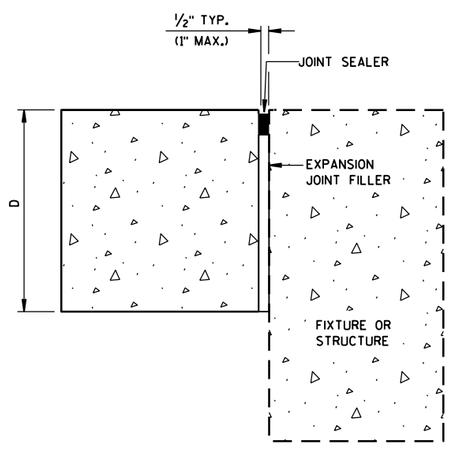

UNTIED-LONGITUDINAL

EXPANSION JOINTS

CONCRETE PAVEMENT
JOINT TYPES

STATE OF WISCONSIN
DEPARTMENT OF TRANSPORTATION

6

6

S.D.D. 13 C 18-4c

S.D.D. 13 C 18-4c

13C18 sheet d: Concrete Pavement Jointing at Utility Fixtures

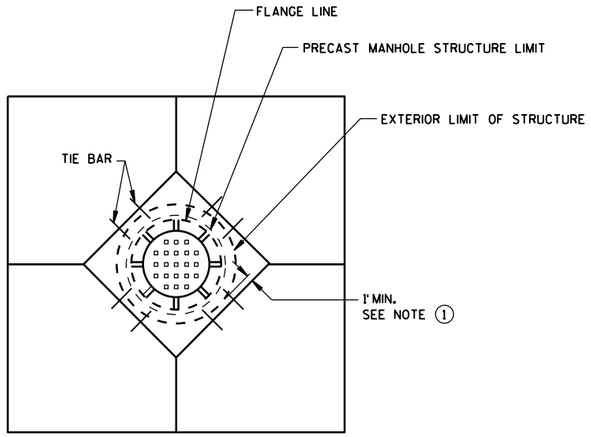

DIAGONAL MANHOLE BOXOUT FOR CONSTRUCTION JOINTS

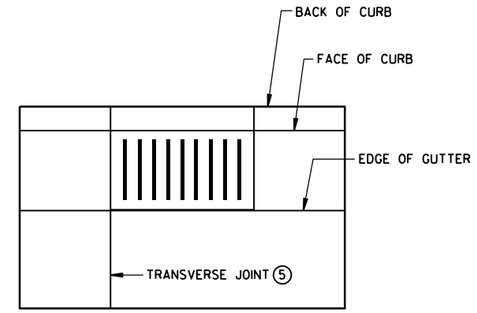

INLET WITH TRANSVERSE JOINT

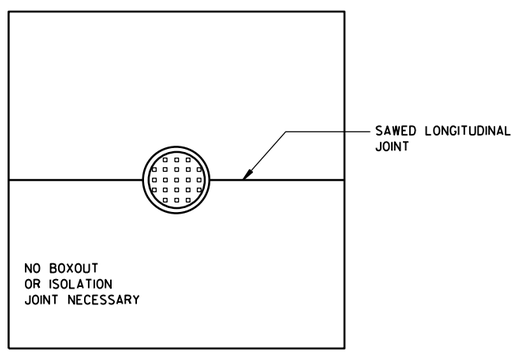

MANHOLE WITH LONGITUDINAL JOINT

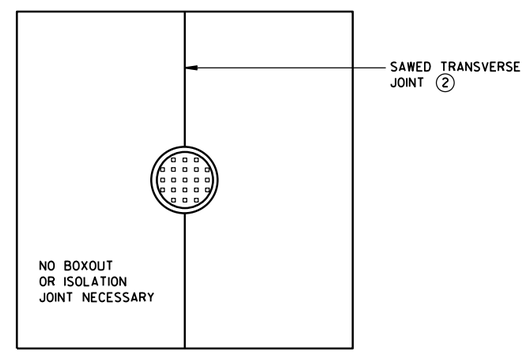

MANHOLE WITH TRANSVERSE JOINT

GENERAL NOTES

1. USE BOXOUTS WHEN UTILITY STRUCTURE IS IN THE PATH OF CONSTRUCTION JOINTS. PROVIDE A 1-FOOT MINIMUM CLEARANCE BETWEEN THE EXTERIOR LIMIT OF THE STRUCTURE TO THE DIAMOND BOXOUT.
2. ADJUST TRANSVERSE JOINT TO INTERSECT MANHOLE IF POSSIBLE.
3. IF DISTANCE BETWEEN THE LONGITUDINAL JOINT AND THE EDGE OF MANHOLE IS 2 FEET OR LESS, DIVERT THE LONGITUDIAL JOINT AT A 2:1 TAPER RATE TO THE CENTER OF THE MANHOLE. IF THE DISTANCE IS GREATER THAN 2 FEET, DO NOT DIVERT THE JOINT AND SAW AS NORMAL. PLACE REBAR REINFORCEMENT AROUND THE MANHOLE.
4. IF DISTANCE FROM THE EDGE OF THE MANHOLE TO THE NEAREST TRANSVERSE JOINT IS 4 FEET OR LESS, REDIRECT JOINT TO INTERSECT THE CENTER OF THE MANHOLE. IF DISTANCE IS GREATER THAN 4 FEET, DO NOT DIVERT THE JOINT AND SAW AS NORMAL. PLACE REBAR REINFORCEMENT AROUND THE MANHOLE.
5. ALIGN TRANSVERSE JOINT WITH ONE EDGE OF INLET WHEN PRACTICAL.

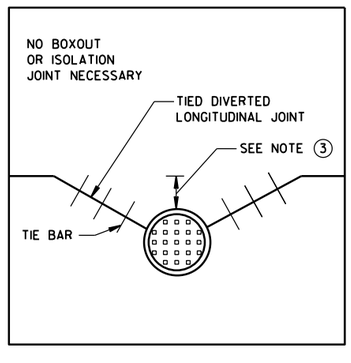

MANHOLE WITH DIVERTED LONGITUDINAL CONTRACTION JOINT

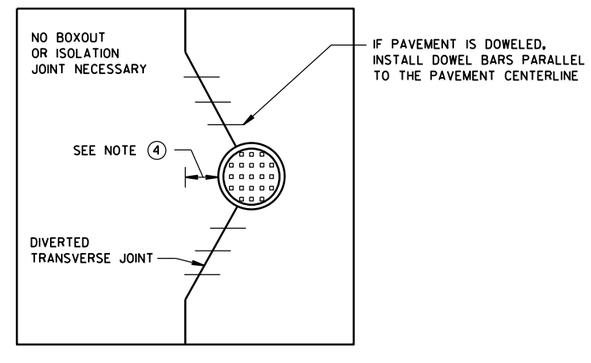

MANHOLE WITH DIVERTED TRANSVERSE CONTRACTION JOINT

CONCRETE PAVEMENT JOINTING AT UTILITY FIXTURES	
STATE OF WISCONSIN DEPARTMENT OF TRANSPORTATION	
APPROVED	
Sept., 2016 DATE	/S/ Peter Kemp, P.E. PAVEMENT SUPERVISOR
FHWA	

6

6

S.D.D. 13 C 18-4d

S.D.D. 13 C 18-4d

13C18 sheet e: Concrete Pavement Jointing and Steel Reinforcement in Roundabouts

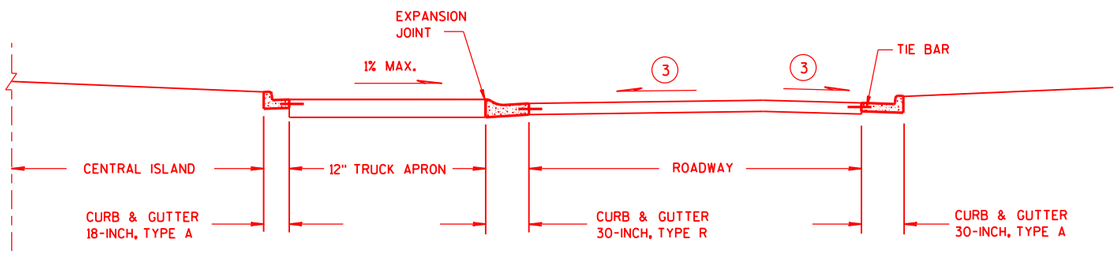

SECTION A-A

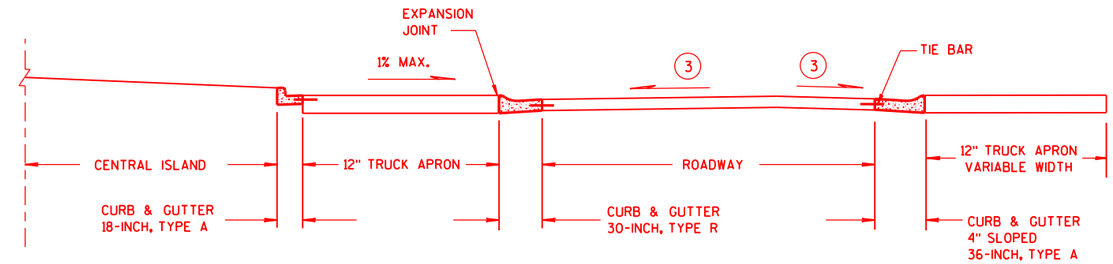

SECTION B-B

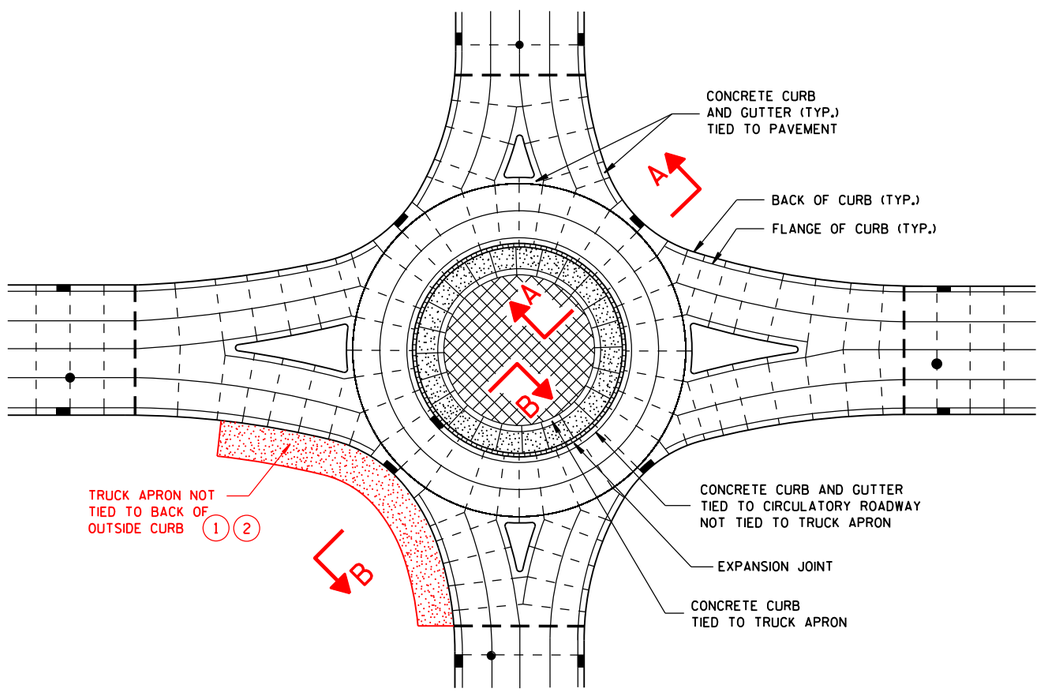

ISOLATED CIRCLE JOINT LAYOUT FOR ROUNDABOUTS

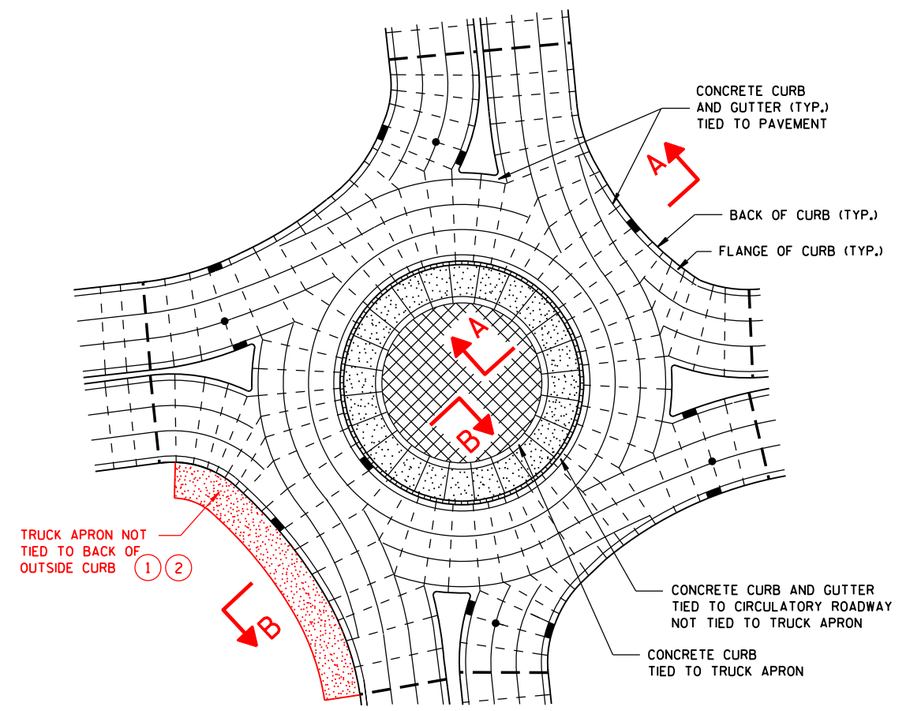

PINWHEEL JOINT LAYOUT FOR ROUNDABOUTS

GENERAL NOTES

MAXIMUM JOINT SPACING IS IN ACCORDANCE WITH THE TABLE SHOWN ON SDD 13C18 SHEET "a".

USE AN EXPANSION JOINT FILLER MEETING THE REQUIREMENTS OF STANDARD SPECIFICATION 415.

DO NOT DOWEL OR TIE THE TRUCK APRON TRANSVERSE JOINTS.

1. DESIGNER DETERMINES SIZE AND LOCATION(S) OF TRUCK APRON TO ACCOMMODATE TRACKING OF OVERSIZE/OVERWEIGHT VEHICLES.
2. DO NOT TIE THE OUTSIDE TRUCK APRON TO THE BACK SIDE OF CURB WHEN THE TRUCK APRON WIDTH IS 3 FEET OR GREATER AT ANY LOCATION.
3. CONFORM TO PLAN CONSTRUCTION DETAILS FOR CIRCULATORY ROADWAY CROSS SLOPE.

LEGEND

- DOWELED JOINT
- TIED JOINT
- EXPANSION JOINT
- POTENTIAL DOWELED EXPANSION JOINT
- TRUCK APRON
- CENTRAL ISLAND
- UTILITY STRUCTURES

CONCRETE PAVEMENT JOINTING AND STEEL REINFORCEMENT IN ROUNDABOUTS

STATE OF WISCONSIN
DEPARTMENT OF TRANSPORTATION

APPROVED

Sept., 2016 — DATE

/S/ Peter Kemp, P.E. — PAVEMENT SUPERVISOR

FHWA

6

S.D.D. 13 C 18-4e

Concrete Pavement Jointing

References:

FDM 14-10-10
FDM 14-10-35

Bid items associated with this drawing:

ITEM NUMBER	DESCRIPTION	UNIT
320.0100 - 0199	Concrete Base (inch)	SY
320.0300 - 0399	Concrete Base HES (inch)	SY
415.0060 - 0199	Concrete Pavement (inch)	SY
415.1080 - 1199	Concrete Pavement HES (inch)	SY

Standardized Special Provisions associated with this drawing:

STSP NUMBER	TITLE
NONE	

Other SDDs associated with this drawing:

SDD 8d1	Concrete Curb, Concrete Curb & Gutter and Ties
SDD 13c1	Concrete Pavement Longitudinal Joints and Ties
SDD 13c4	Urban Non-Doweled Concrete Pavement
SDD 13c11	Rural Doweled Concrete Pavement
SDD 13c13	Urban Doweled Concrete Pavement

Design Notes:

Include this SDD along with SPV.0105.XX, *Concrete Pavement Joint Layout (located at* http://wisconsindot.gov/Documents/doing-bus/eng-consultants/cnslt-rsrces/tools/qmp/jointlayout.pdf*)*, whenever the plans include concrete pavement or concrete base. Always include sheets "a"," b", "c", and "d" together in plan sets. Sheet "e" is only needed if the project includes a roundabout. For unique project circumstances that are not covered in this set of SDDs, the contractor shall review the joint layout plan with the engineer.

Contact Person:

Myungook Kang (MK) (608) 246-7957