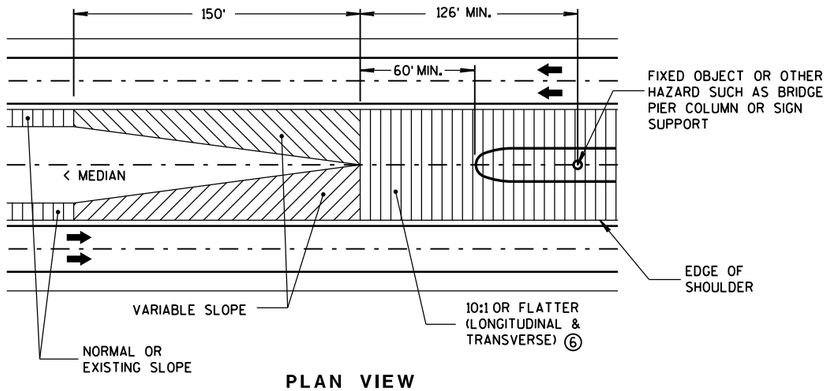

PLAN VIEW

GRADING AT BULLNOSE

(ALL INSTALLATIONS)

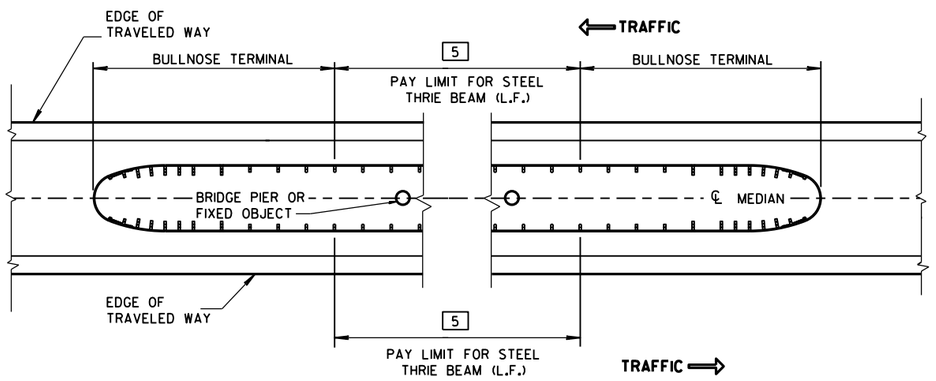

MEDIAN HAZARD PROTECTION PAY LIMITS

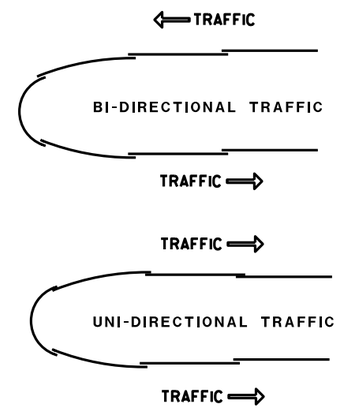

LAPPING DETAIL

(ALL INSTALLATIONS)

GENERAL NOTES

SEE STANDARD DETAIL DRAWINGS 14 B 26a-e.

PUNCHING, DRILLING, CUTTING OR WELDING IS NOT PERMITTED ON ANY GALVANIZED THRIE BEAM ACCESSORY OR TERMINAL ACCESSORY.

OTHER ANCHOR CABLE ASSEMBLIES HAVING 40,000 LBS. MIN. BREAKING STRENGTH MAY BE USED.

FOR POSTS 2 THROUGH 14, IF POST CANNOT BE INSTALLED AT SPECIFIED LOCATION 1 EXTRA STANDARD WOOD BLOCK MAY BE ADDED.

THE USE OF STEEL POSTS ON THE BULLNOSE IS NOT ALLOWED.

BOLTS AND ALL NECESSARY HARDWARE SHALL BE GALVANIZED IN ACCORDANCE WITH ASTM A 153.

ALL THRIE BEAM SHALL BE 12-GAUGE.

IF ROCK IS ENCOUNTERED, REMOVE ROCK TO FULL DEPTH OF POST PLUS 2½" AND 12" DIAMETER AROUND POST. SEE SDD 14B15 OR SDD 14B42 FOR MORE INFORMATION.

[1] SLOTTED THRIE BEAM RAIL NO. 1. (POST 1 TO POST 1)

[2A] SLOTTED THRIE BEAM RAIL NO. 2A. (POST 1 TO POST 5)

[3] SLOTTED THRIE BEAM RAIL NO. 3. (POST 5 TO POST 8)

[4] UNBENT STANDARD THRIE-BEAM RAIL NO.4. (POST 8 TO POST 10 & POST 10 TO POST 12)

[5] BEYOND POST 12: CONSTRUCT STEEL THRIE BEAM - USE UNBENT STANDARD THRIE BEAM RAIL NO. 5.

(1) DIMENSIONS ARE FROM BACK OF RAIL TO BACK OF RAIL WHERE RAIL IS BOLTED TO POST OR BLOCK.

(2) U-BOLT CABLE CLIPS (3 PER CABLE) SPACED OUT ON NOSE, TO HOLD CABLE TO BACKSIDE OF THE RAIL.

(3) NOSE CABLE W/SWAGGED END BUTTONS.

(4) NOSE CABLE ANCHOR PLATE (BACKSIDE OF SPLICE).

(5) THE SLACK IN THE NOSE CABLES SHALL BE EVENLY DISTRIBUTED BETWEEN THE CABLE CLIP FASTENERS AND POST NO. 1 ON EITHER SIDE OF THE NOSE.

(6) PROVIDE SUITABLE DRAINAGE WHEN MEDIAN GRADING IMPEDES NORMAL FLOW.

(7) 2'-6" MINIMUM LATERAL DISTANCE BETWEEN BACK OF POST AND FACE OF FIXED OBJECT.

(8) MAXIMUM WIDTH OF SYSTEM IS 14'-2½" MEASURED FROM BACK OF RAIL TO BACK OF RAIL WHERE RAIL IS BOLTED TO A POST OR BLOCK.

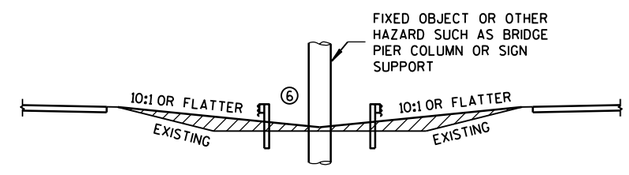

MEDIAN GRADING SECTION

(ALL INSTALLATIONS)

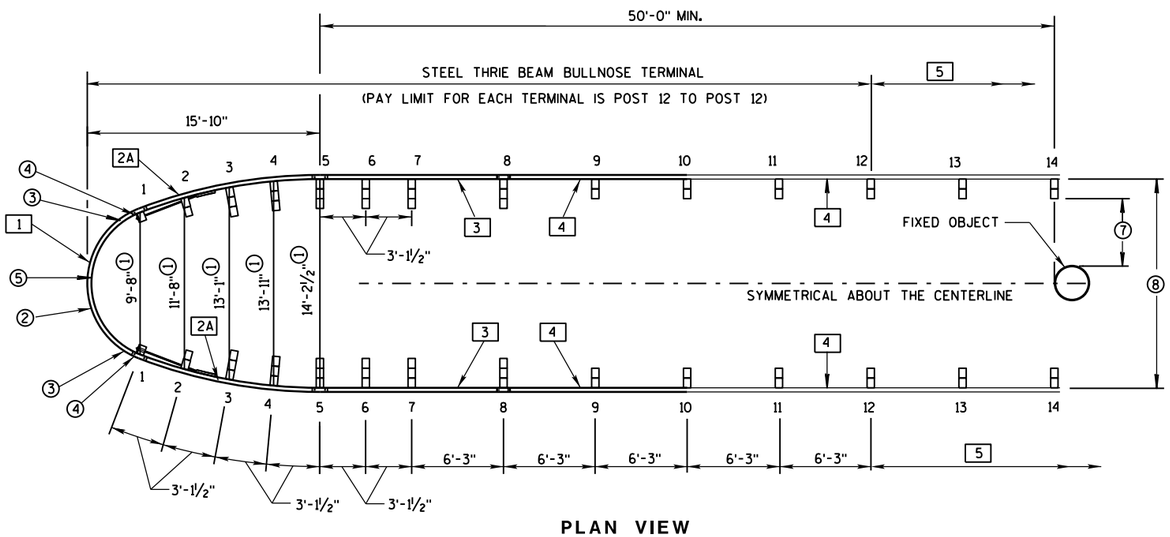

PLAN VIEW

TYPICAL BULLNOSE LAYOUT

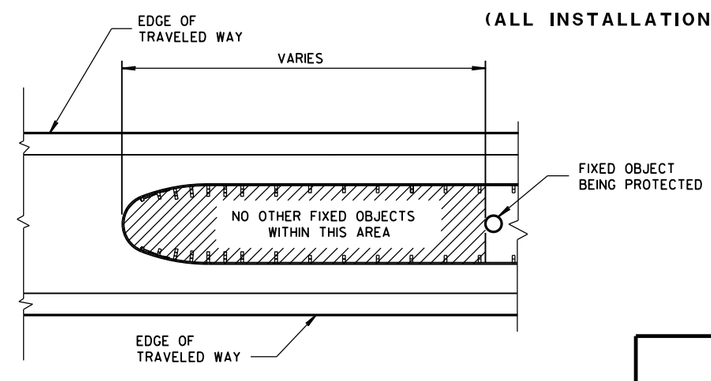

HAZARD FREE AREA INSIDE BULLNOSE

STEEL THRIE BEAM BULLNOSE TERMINAL

STATE OF WISCONSIN
DEPARTMENT OF TRANSPORTATION

6
S.D.D. 14 B 26-3a

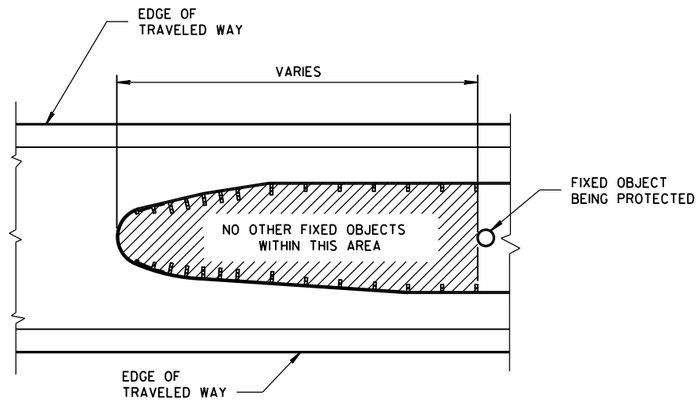

HAZARD FREE AREA INSIDE BULLNOSE

GENERAL NOTES

SEE STANDARD DETAIL DRAWINGS 14 B 26a-e.

FOR POSTS 2 THROUGH 14, IF POST CANNOT BE INSTALLED AT SPECIFIED LOCATION 1 EXTRA STANDARD WOOD BLOCK MAY BE ADDED.

- [1] SLOTTED THRIE BEAM RAIL NO. 1. (POST 1 TO POST 1)
- [2A] SLOTTED THRIE BEAM RAIL NO. 2A. (POST 1 TO POST 5)
- [2B] SLOTTED THRIE BEAM RAIL NO. 2B. (POST 1 TO POST 5)
- [3] SLOTTED THRIE BEAM RAIL NO. 3. (POST 5 TO POST 8)
- [4] UNBENT STANDARD THRIE-BEAM RAIL NO. 4. (POST 8 TO POST 10 & POST 10 TO POST 12)
- [5] BEYOND POST 12: CONSTRUCT STEEL THRIE BEAM - USE UNBENT STANDARD THRIE BEAM RAIL NO. 5.

(1) DIMENSIONS ARE FROM BACK OF RAIL TO BACK OF RAIL WHERE RAIL IS BOLTED TO POST.

(2) TAPER BEGINNING AT POST NO. 1 MUST CONTINUE TO POST NO. 5. PAST POST NO. 5 TAPER MAY END OR BE EXTENDED UP TO 15.6 DEGREES TO FIT VARIABLE MEDIAN WIDTHS. (SEE PLAN)

(3) FOR MEDIANS WIDER THAN 14'-2½" MEASURED FROM BACK OF RAIL TO BACK OF RAIL WHERE RAIL IS BOLTED TO A POST OR BLOCK.

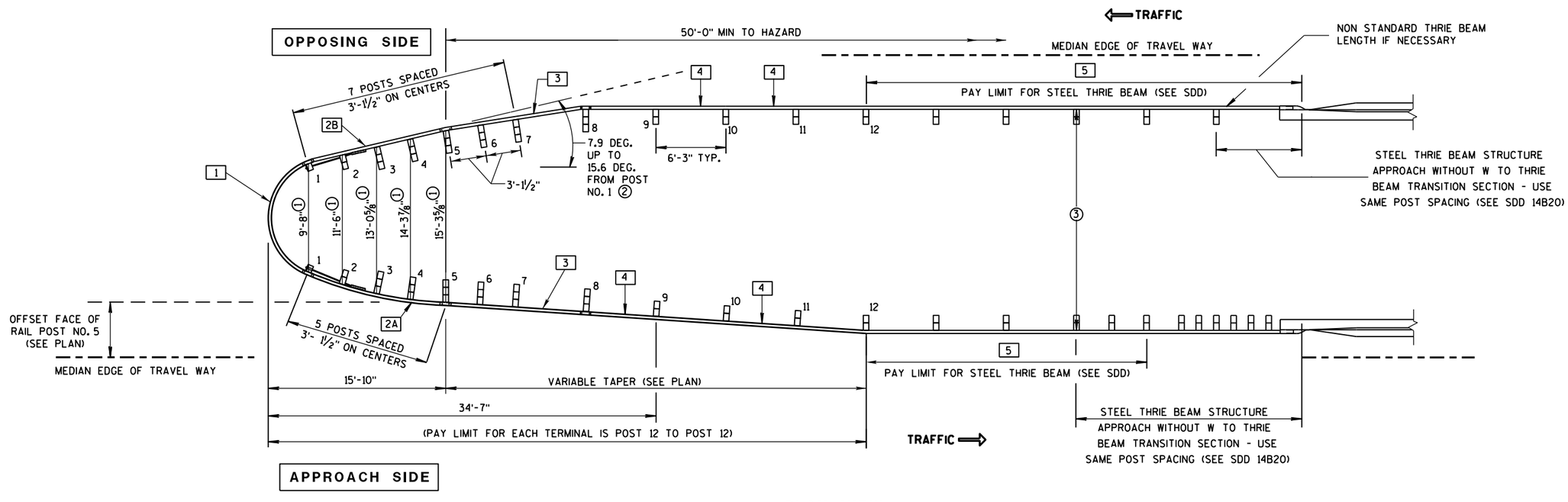

PLAN VIEW

WIDENED BULLNOSE DESIGN

(INSTALLATION AT TWIN BRIDGES WITH BI-DIRECTIONAL TRAFFIC SHOWN)

STEEL THRIE BEAM
BULLNOSE TERMINAL

STATE OF WISCONSIN
DEPARTMENT OF TRANSPORTATION

6
S.D.D. 14 B 26-3b

14B26 sheet c: Steel Thrie Beam Bullnose Terminal

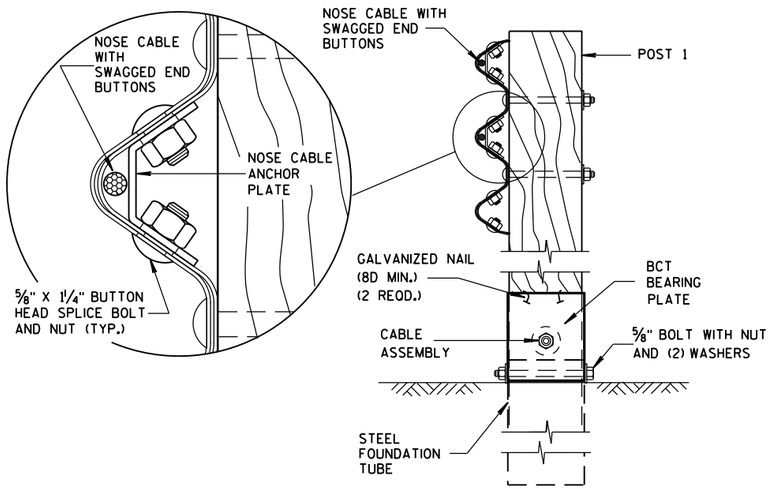

SIDE VIEW

NOSE CABLE ASSEMBLY AT POST NO. 1

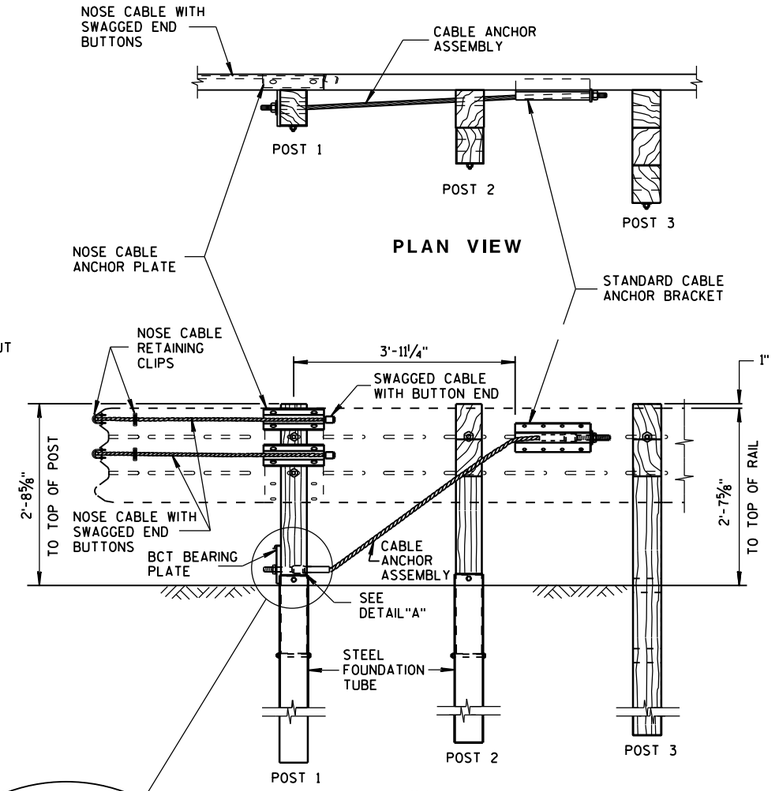

FRONT VIEW

NOSE CABLE ANCHOR AND STANDARD BRACKET ASSEMBLY

GENERAL NOTES

SEE STANDARD DETAIL DRAWINGS 14 B 26a-e.

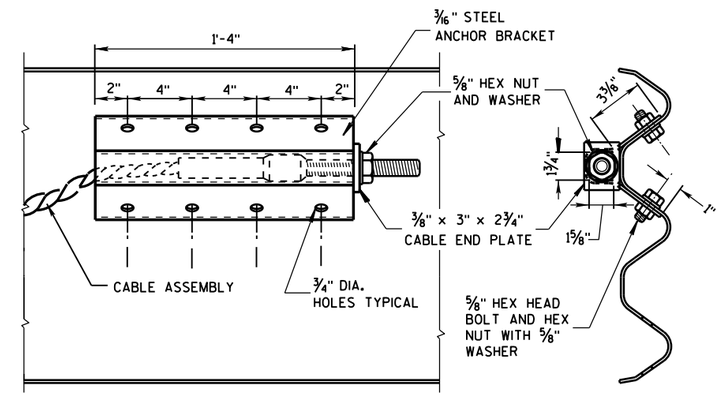

FRONT VIEW END VIEW

DETAILS OF CABLE ANCHOR BRACKET

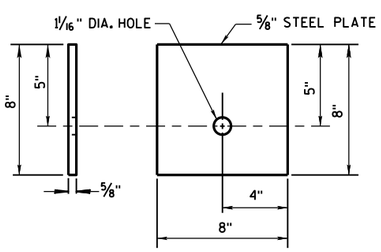

BCT BEARING PLATE

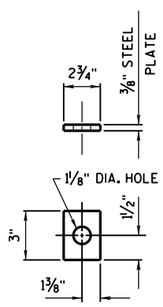

CABLE END PLATE

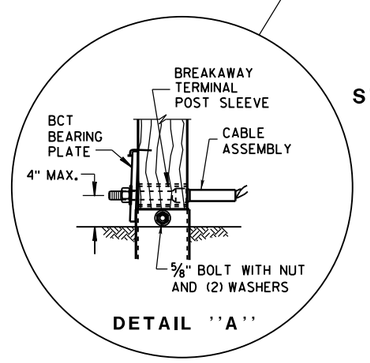

DETAIL ''A''

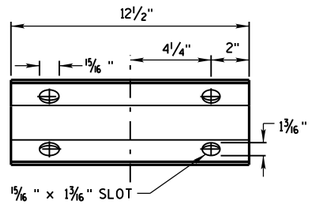

ELEVATION VIEW

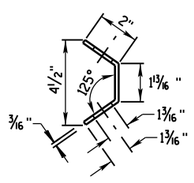

END VIEW

NOSE CABLE ANCHOR PLATE

NOTE: 12 1/2" x 5 13/16" x 3/16" STEEL PLATE (A306)

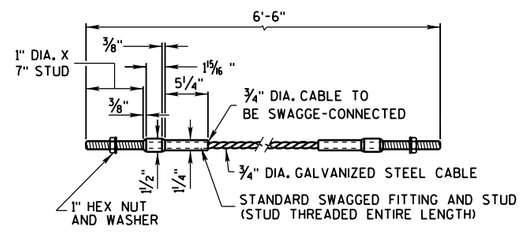

DETAILS OF CABLE ANCHOR ASSEMBLY

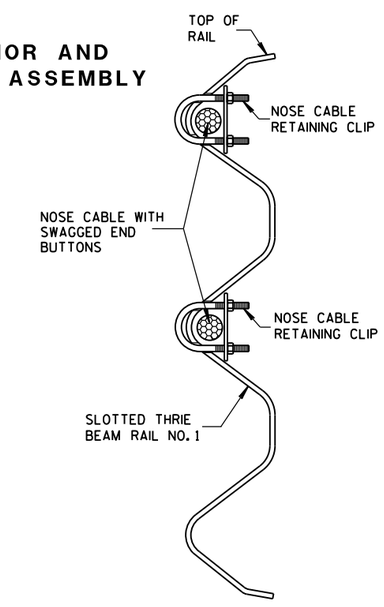

PLACEMENT OF NOSE CABLE RETAINING CLIP

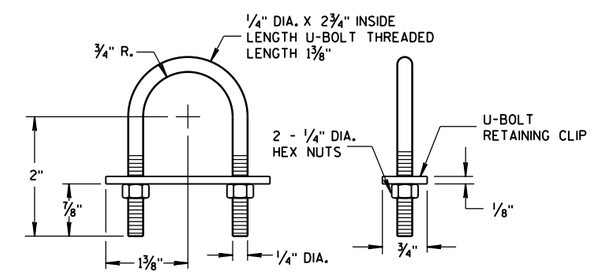

NOSE CABLE RETAINING CLIP

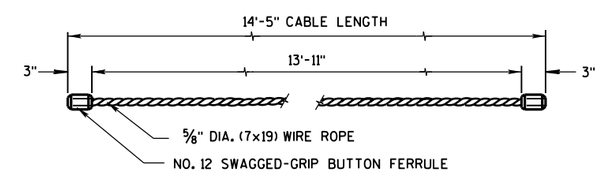

NOSE CABLE WITH SWAGGED END BUTTONS

TO PULL OFF SWAGGED GRIP BUTTON FERRULE FROM WIRE ROPE REQUIRES A FORCE EQUAL TO 98% OF THE WIRE ROPE'S BREAKING STRENGHT.

STEEL THRIE BEAM BULLNOSE TERMINAL

STATE OF WISCONSIN
DEPARTMENT OF TRANSPORTATION

6

S.D.D. 14 B 26-3c

14B26 sheet d: Steel Thrie Beam Bullnose Terminal

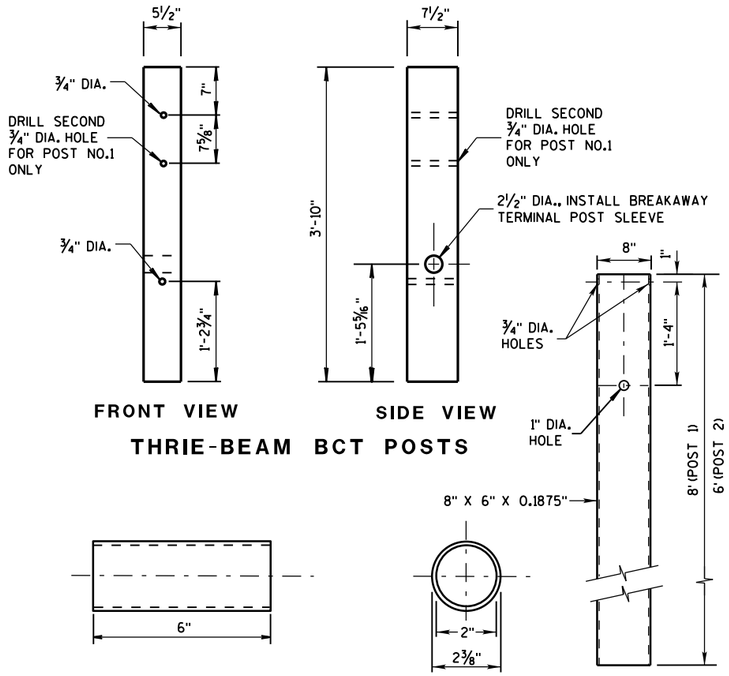

THRIE-BEAM BCT POSTS

BREAKAWAY TERMINAL POST SLEEVE

STEEL FOUNDATION TUBE

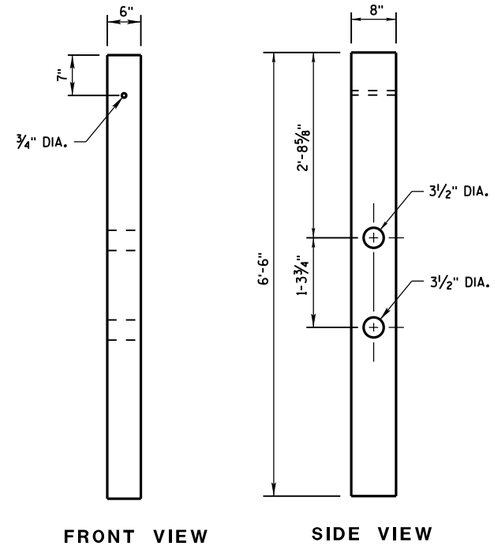

THRIE-BEAM CRT WOOD POSTS

GENERAL NOTES

SEE STANDARD DETAIL DRAWINGS 14 B 26a-e.

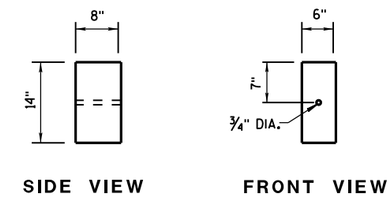

STANDARD WOOD BLOCK

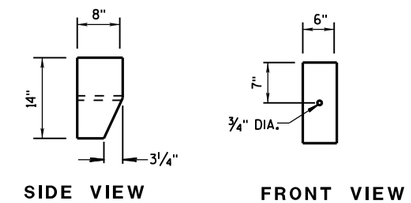

TAPERED WOOD BLOCK

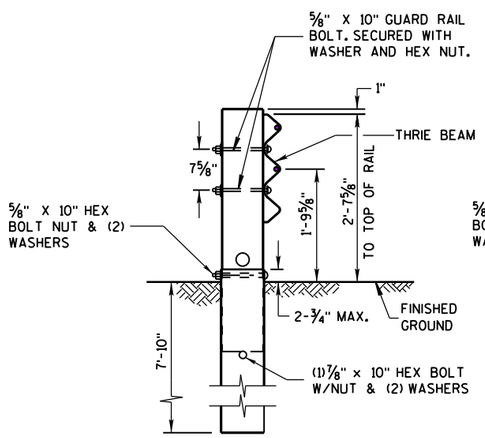

THRIE-BEAM BCT POST
(WITH 8'-0" FOUNDATION TUBE)

POST NO. 1

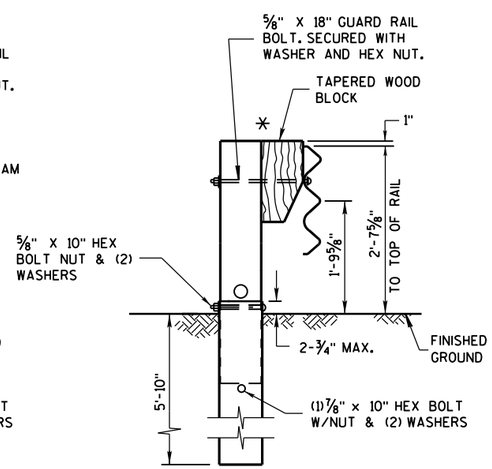

THRIE-BEAM BCT POST
(WITH 6'-0" FOUNDATION TUBE AND 1'-2" TAPERED BLOCK)

POST NO. 2

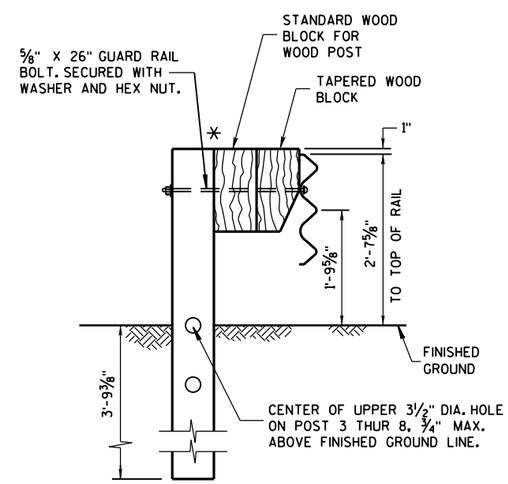

THRIE-BEAM CRT POST
(6'-6" LONG POST WITH 1'-2" BLOCK AND 1'-2" TAPERED BLOCK)

POST NO. 3,4,5,6,7, & 8

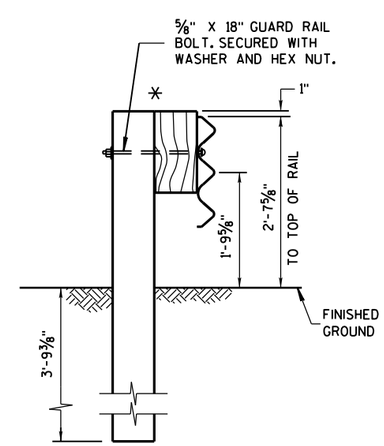

THRIE-BEAM POST
(6'-6" LONG POST WITH 1'-2" BLOCK)

POST NO. 9,10,11,& 12
(ALSO USE FOR STEEL THRIE BEAM BEYOND POST 12)

* IF NEEDED DUE TO AN UNDERGROUND OBSTACLE ADD 1 ADDITIONAL STANDARD BLOCKOUT TO POST.

STEEL THRIE BEAM BULLNOSE TERMINAL

STATE OF WISCONSIN
DEPARTMENT OF TRANSPORTATION

6

6

S.D.D. 14 B 26-3d

S.D.D. 14 B 26-3d

14B26 sheet e: Steel Thrie Beam Bullnose Terminal

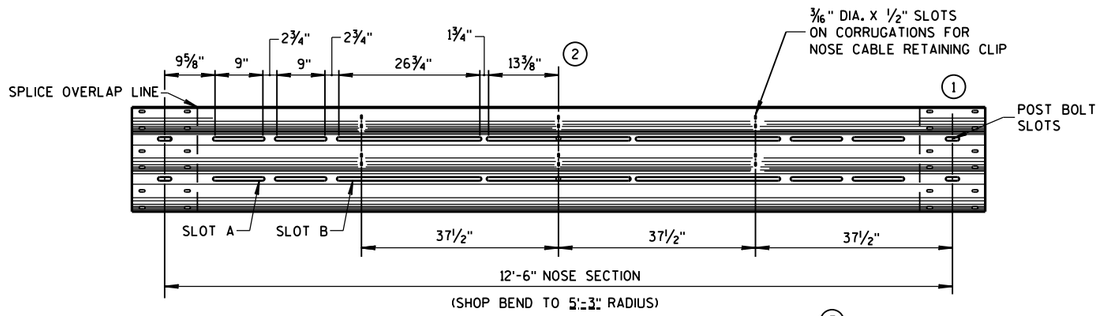

SLOTTED THRIE BEAM RAIL NO. 1 (3)

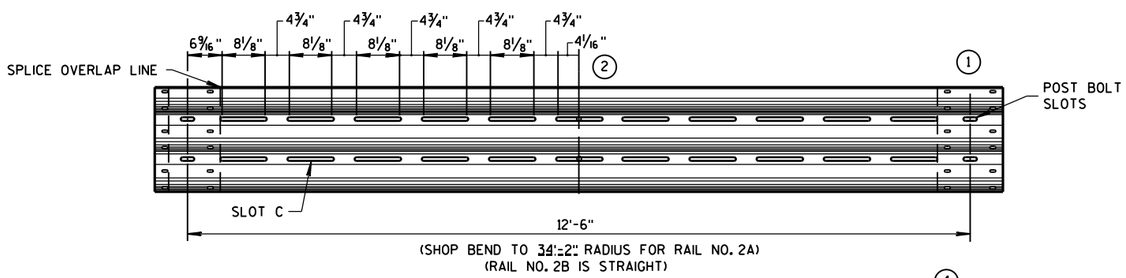

SLOTTED THRIE BEAM RAILS NO. 2A AND NO. 2B (4)

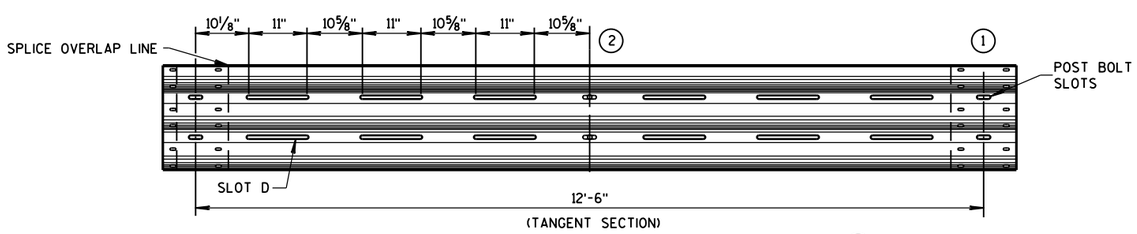

SLOTTED THRIE BEAM RAIL NO. 3 (5)

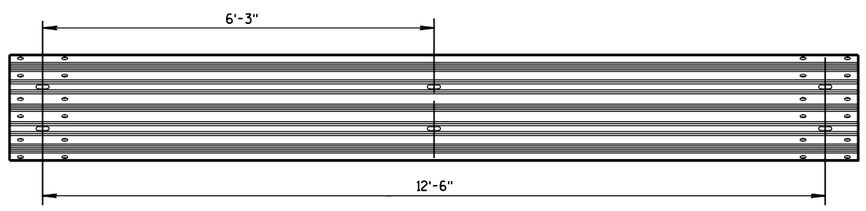

UNBENT STANDARD THRIE BEAM RAIL NO. 4 AND NO. 5

GENERAL NOTES

SEE STANADRD DETAIL DRAWINGS 14 B 26a-e.

1. SLOTTED THRIE BEAM RAIL DIMENSIONS SHOWN ARE BEFORE BENDING TO THE RADIUS SHOWN.
2. SLOT SIZE AND SPACING SYMMETRIC.
3. SLOTTED THRIE BEAM RAIL NO. 1, 12'-6", SHOP BEND TO R=5'-3".
4. SLOTTED THRIE BEAM RAIL NO. 2A, 12'-6", SHOP BEND TO R=34'-2".
   SLOTTED THRIE BEAM RAIL NO. 2B, 12'-6", RAIL IS STRAIGHT.
5. SLOTTED THRIE BEAM RAIL NO. 3, 12'-6", TANGENT.

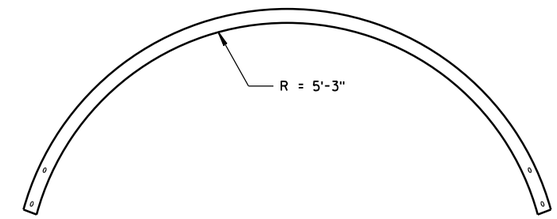

PLAN VIEW

SLOTTED THRIE BEAM RAIL NO. 1

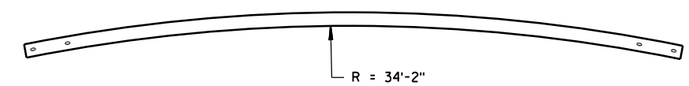

PLAN VIEW

SLOTTED THRIE BEAM RAIL NO. 2A

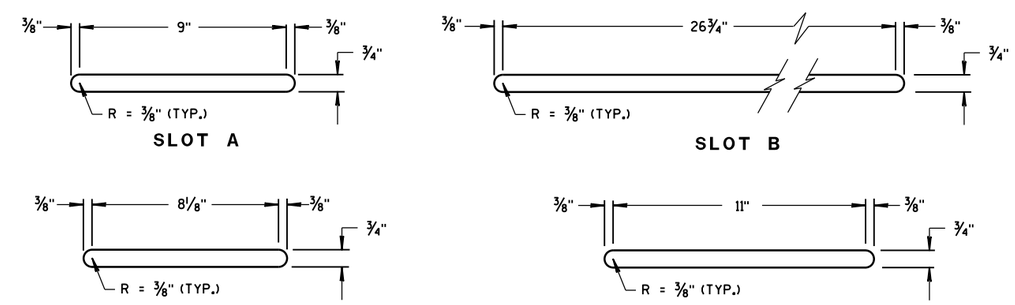

SLOT DETAILS

STEEL THRIE BEAM
BULLNOSE TERMINAL

STATE OF WISCONSIN
DEPARTMENT OF TRANSPORTATION

APPROVED

June 2014 — DATE

/S/ Jerry H. Zogg — ROADWAY STANDARDS DEVELOPMENT ENGINEER

FHWA

6

6

S.D.D. 14 B 26-3e

S.D.D. 14 B 26-3e

Steel Thrie Beam Bullnose Terminal

References:

Standard Spec 614
FDM 11-45-1
AASHTO Roadside Design Guide
MwRSF Research Report No. TRP-03-95-00
FHWA approval letter HSA-1\HSA-CC68,dated November 8, 2000

Bid items associated with this drawing:

ITEM NUMBER	DESCRIPTION	UNIT
614.0200	Steel Thrie Beam Structure Approach	LF
614.0220	Steel Thrie Beam Bullnose TerminaL	EACH
614.0230	Steel Thrie Beam	LF
614.0010	Barrier System Grading Shaping Finishing	EACH

Standardized Special Provisions associated with this drawing:

STSP NUMBER	TITLE
NONE	

Other SDDs associated with this drawing:

SDD 14b15	Steel Plate Beam Guard, Class A, Installation and Elements*
SDD 14b20	Thrie Beam Structure Approaches
SDD 14b42	Midwest Guardrail System (MGS) Guardrail*

* If thrie beam bullnose is the only semi-rigid barrier system being installed, only one of the SDDs is required in the plan set to provide the guidance on rock excavation for posts. On plans with both the thrie beam transition, and beam guard, SDD 14B15 or SDD 14b42 will be included in the plan.

Design Notes:

Steel thrie beam bullnose (i.e. bullnose) is a non-gating system that has passed NCHRP 350 crash testing. The system can be used to protect hazards, such as bridge piers; overhead sign support structures, gaps between twin bridges and gore areas. It can be used to protect uni-directional (between a ramp and the mainline) or bi-directional (median application) traffic from impacting a fixed object.

The advantages of bullnose system are: it is typically farther from the roadway than a traditional beam guard installation (i.e. less likely to be hit), smaller amount of overall barrier required (i.e. less likely to be hit), and because the fixed object is surrounded, errant vehicles have difficulties getting to the fixed object. The disadvantages of the bullnose are: potential for more grading and drainage structures, and it may be more expensive to repair once impacted (i.e. nose impacts may require bent rail).

During a head-on impact, an errant vehicle will stop within the area hazard free area inside the bullnose. This area is to be free of fixed objects and traversable. During a side impact (e.g. between post 7 through 14), the bullnose acts like other semi-rigid barrier systems (i.e. post rotation is important).

If there are erosion or maintenance concern designer may use a mow strip design similar to SDD 14b15. However, early coordination with BPD will be required and construction details may be needed. Other methods to control erosion or maintenance concerns near a bullnose detail will require significant coordination with BPD and will only be granted on a limited case-by-case basis and requires documentation within the DSR.

Avoid placing curb and gutter near a bullnose. If curb and gutter is needed near a bullnose, document why curb and gutter is needed in the DSR. Curb and gutter may have a negative impact on barrier performance. If curb and gutter needed provide driveway curb & gutter on approaches to bullnose up to post 7.

Recommended layout procedure for the bi-directional variable width bullnose is:

1. Position post 5 of the approach side at the shy line offset value.
2. Use appropriate taper rates on the approach side of the bullnose.
3. Adjust opposing side's taper rates per detail.

Use taper rates listed in Table 5.7 of the 2006 AASHTO Roadside Design Guide. Shy line offsets listed in Table 5.5 of the 2006 AASHTO Roads Design Guide. Use linear interpolation to get intermediate values.

If there are difficulties in placing the bullnose options are:

Adjust approach side post 5 position

- Desirable offset is shy line offset.
- Minimum offset would be edge of shoulder.
- Less than minimum would be inside the shoulder (requires design exception)

Lengthen installation

- Use flatter taper rates on the approach side (e.g. for a given speed taper rate is 21:1, use 24:1)
- Add more thrie beam sections between post 12 and hazards being protected.

Grading is critical for system to function correctly. Proper grading provides strength to the bullnose system and increase the probability that an errant vehicle will properly engage the bullnose.

Cut cross sections: at least 210’ prior to system, 60’ prior to system, post 1, post 5 and at fixed object being protected. More cross sections may be needed to show drainage, or how to blend slopes together.

Review drainage and subsurface conflicts (e.g. utilities, drainage structures, rock…) near installation early in the design process. Posts for the bullnose are embedded deeper in the ground than standard beam guard posts. This can cause underground conflicts. Drainage issues may require the installation or adjustment of drainage structures.

Provide SDD 14b15 or 14B42 to provide guidance on rock excavation for bullnose posts.

Provide individual construction details for each bullnose installation in the plan (i.e. construction details). At a minimum, show the following: slope intercepts, underground utilities, drainage structures, taper/flare rates, offset distance to post 5, distance from post 5 to hazard(s) being protected, and lateral offset from back of post to hazard.

More complicated installation (e.g. variable width bullnose, potential underground utility conflicts…), may require a more detailed layout. If there is a potential for a utility conflict, it is recommended that individual post location be detailed. If using the variable width bullnose, proper rail lengths are need (i.e. 12.5’ from center of post to center of post). Designing for proper rail length or match into a thrie beam structure approach may cause the bullnose to be longer than what is needed to protect the hazard or a rail will need to be cut in the field.

If an odd length of rail is needed indicate in plan that a field cut is needed. It is not desirable to cut rails between posts 1 through 7.

Thrie beam bullnose may use the Grading and Shaping and Finishing for Barrier Systems Item.

Contact Person:

Erik Emerson (608) 266-2842