14B33 sheet a: Concrete Barrier Single Slope 32-inch Thrie Beam Anchorage-Barrier Layout

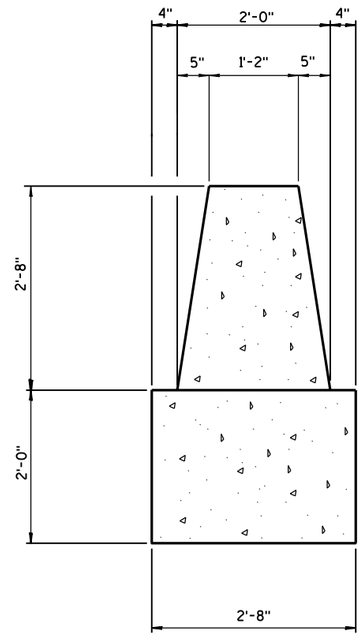

SECTION A-A

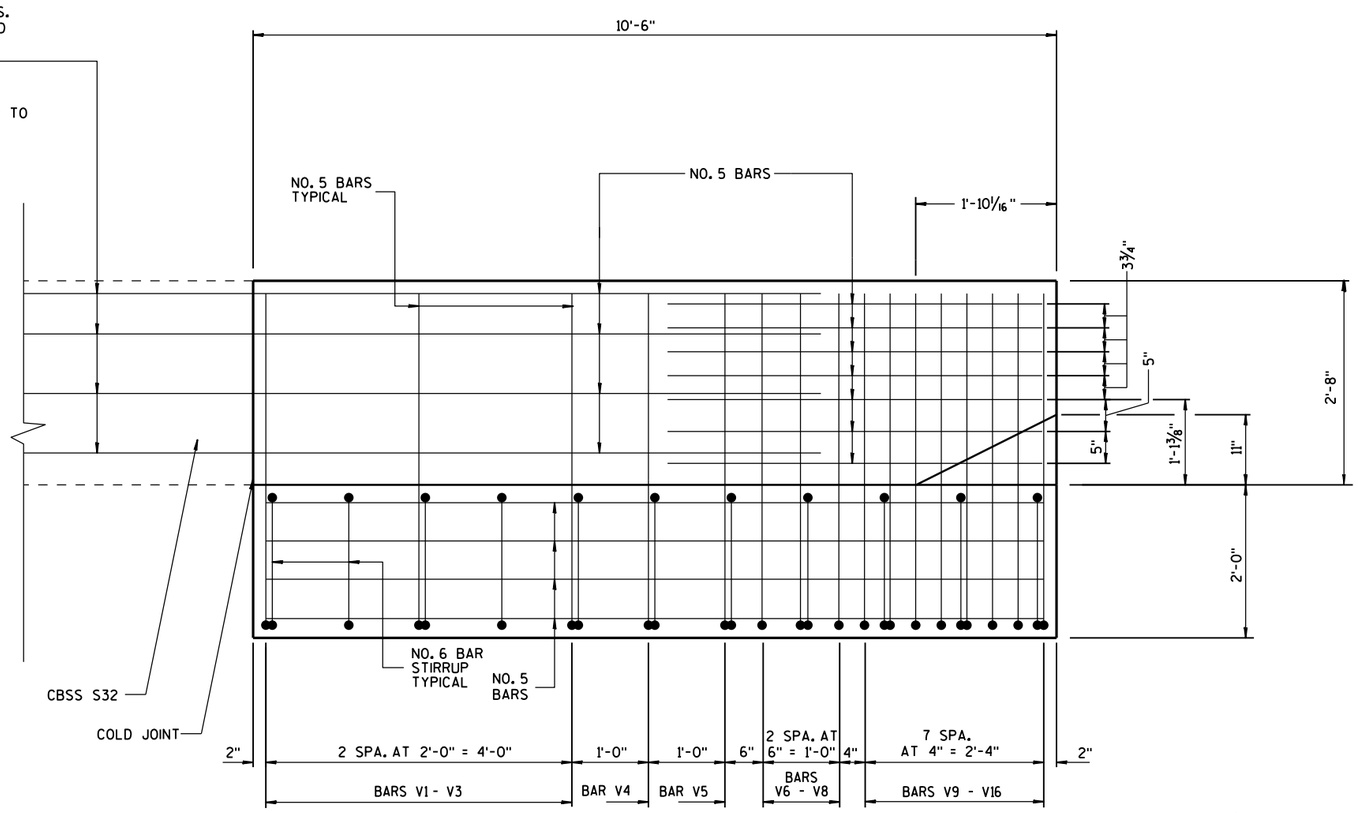

SEE SECTIONS (1) THRU (16)

ELEVATION VIEW

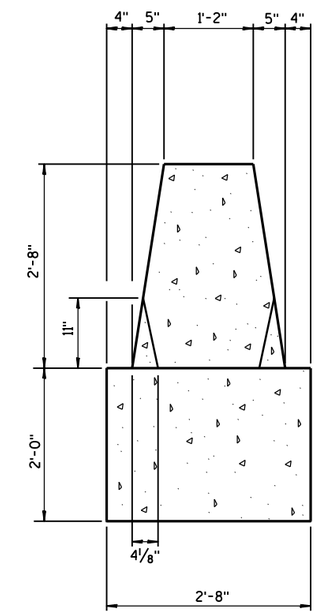

SECTION B-B

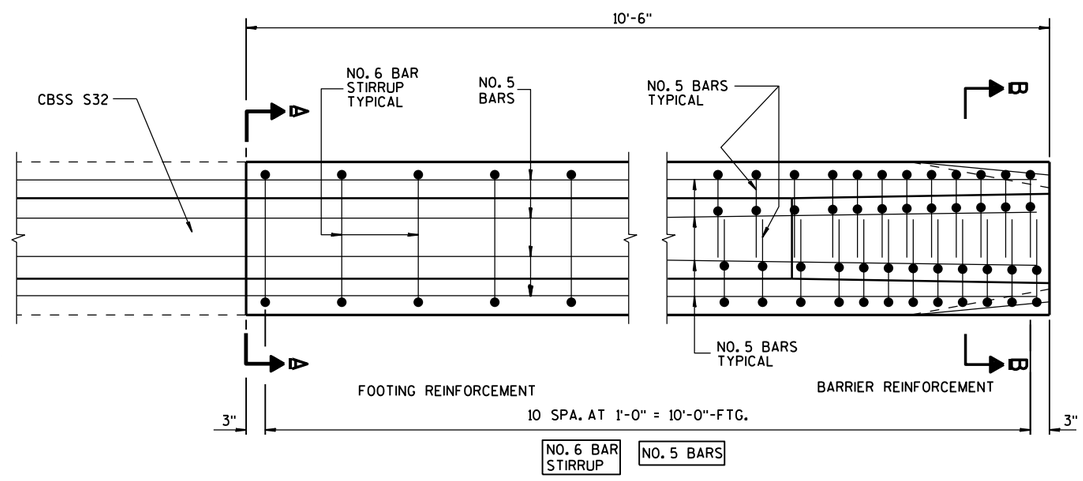

PLAN VIEW

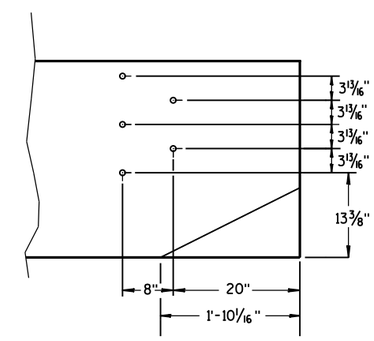

PVC PIPE LOCATIONS

GENERAL NOTES

CONSTRUCT PER STANDARD SPECIFICATION 603.

SPLICES OF LONGITUDINAL BARS TO BE 2' LONG AND FIRMLY TIED AND FASTENED TOGETHER UNLESS NOTED OTHERWISE.

4000 PSI CONCRETE AIR ENTRAINMENT PER STANDARD SPECIFICATIONS SECTION 501.

USE 3/4" BEVEL OR 1" RADIUS ON ALL EXPOSED SHARP EDGES UNLESS NOTED OTHERWISE.

THRIE BEAM ANCHOR INCIDENTAL TO CONCRETE BARRIER ITEM.

INSTALL SCHEDULE 40 PVC PIPE 1" DIAMETER AT LOCATIONS INDICATED.

EXTEND PVC PIPE COMPLETELY THROUGH BARRIER.

CUT ENDS OF PVC PIPE FLUSH WITH FINISHED FACE of BARRIER.

THE NUMBER IN BAR DESIGNATION REPRESENTS THE BARS LOCATION.

2" CLEAR COVER TYPICAL.

CONCRETE BARRIER
SINGLE SLOPE 32"
THRIE BEAM ANCHOR

STATE OF WISCONSIN
DEPARTMENT OF TRANSPORTATION

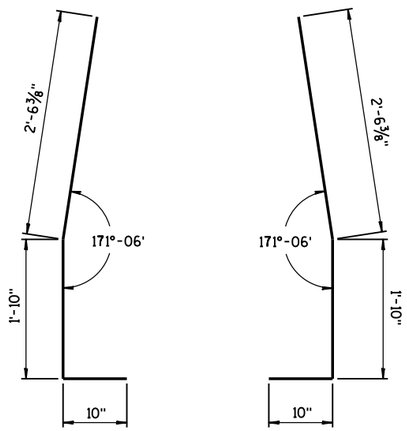

BAR BENDING DETAIL
FOR BARS V1 - V11

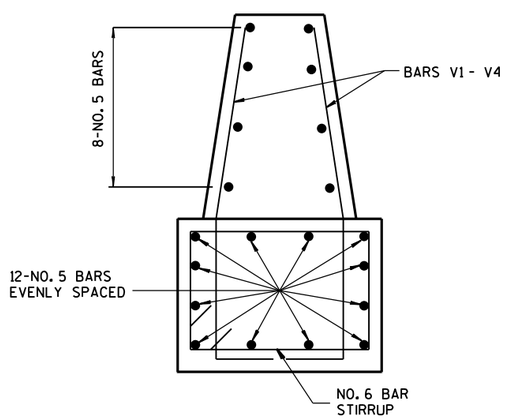

BAR DETAIL
SECTIONS 1 - 4

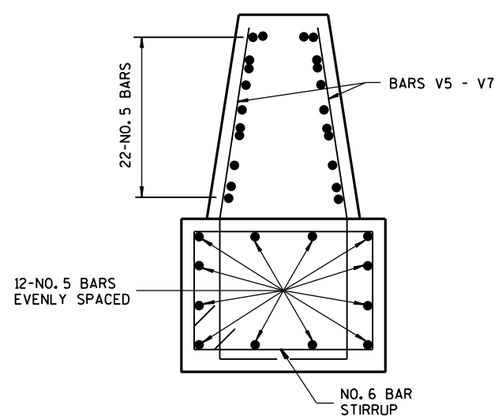

BAR DETAIL
SECTIONS 5 - 7

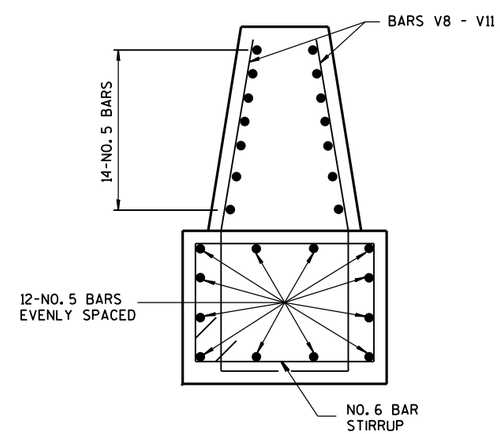

BAR DETAIL
SECTIONS 8 - 11

CONCRETE BARRIER
SINGLE SLOPE 32"
THRIE BEAM ANCHOR

STATE OF WISCONSIN
DEPARTMENT OF TRANSPORTATION

6
S.D.D. 14 B 33-1b

14B33 sheet c: Bar Details for Single Slope 32-inch Thrie Beam Anchorage-Steel Layout #2

BAR CHART
SECTIONS V12 - V13

BAR	A	B	C
V12	2'-2"	171°-15'	2'-1 ¾"
V13	2'-7"	171°-05'	1'-9⅜"

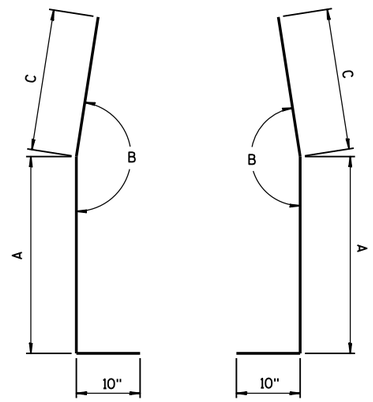

BAR BENDING DETAIL
FOR BARS V12 - V13

BAR CHART
SECTIONS V14 - V16

BAR	A	B	C	D
V14	168°-15'	159°-15'	6"	2'-0"
V15	169°-20'	161°-00'	8"	1'-10"
V16	168°-40'	160°-10'	10"	1'-8"

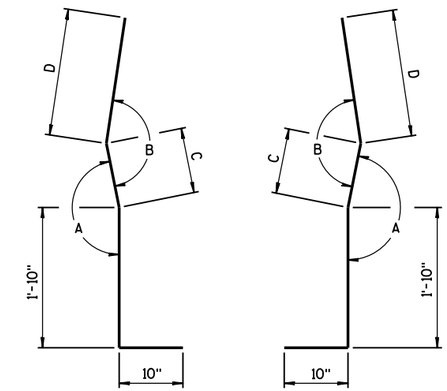

BAR BENDING DETAIL
FOR BARS V14 - V16

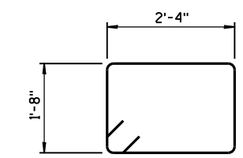

STIRRUP BAR
BENDING DETAIL

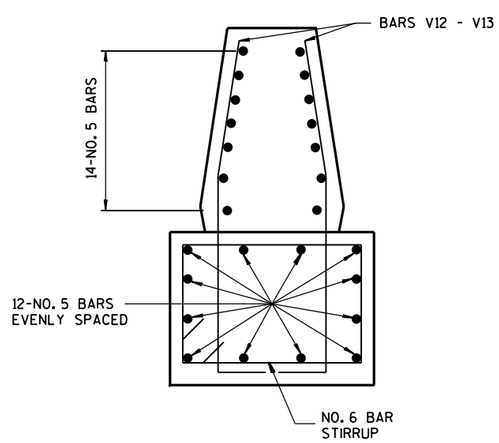

BAR DETAIL
SECTIONS 12 - 13

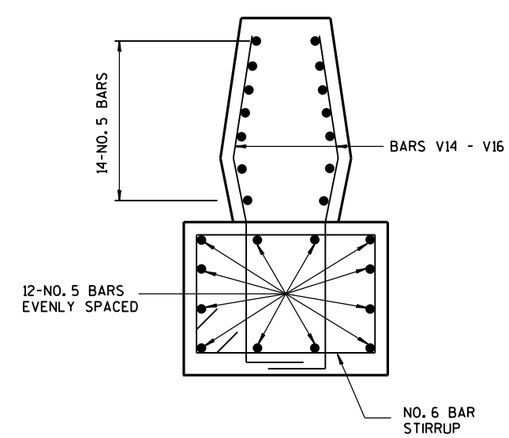

BAR DETAIL
SECTIONS 14 - 16

CONCRETE BARRIER
SINGLE SLOPE 32"
THRIE BEAM ANCHOR

STATE OF WISCONSIN
DEPARTMENT OF TRANSPORTATION

APPROVED
6-3-2010 — DATE
/S/ Jerry H. Zogg — ROADWAY STANDARDS DEVELOPMENT ENGINEER
FHWA

6
S.D.D. 14 B 33-1c

14B33 sheet d: Concrete Barrier Single Slope 36-inch Thrie Beam Anchorage-Barrier Layout

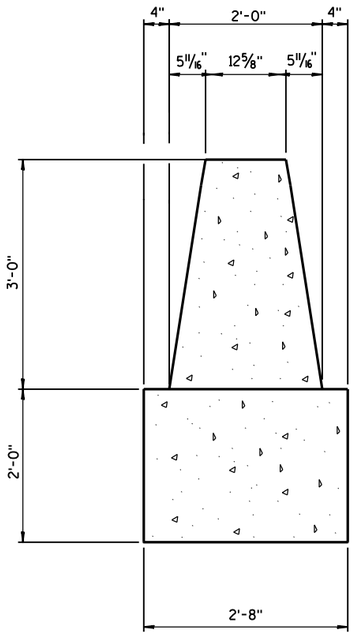

SECTION A-A

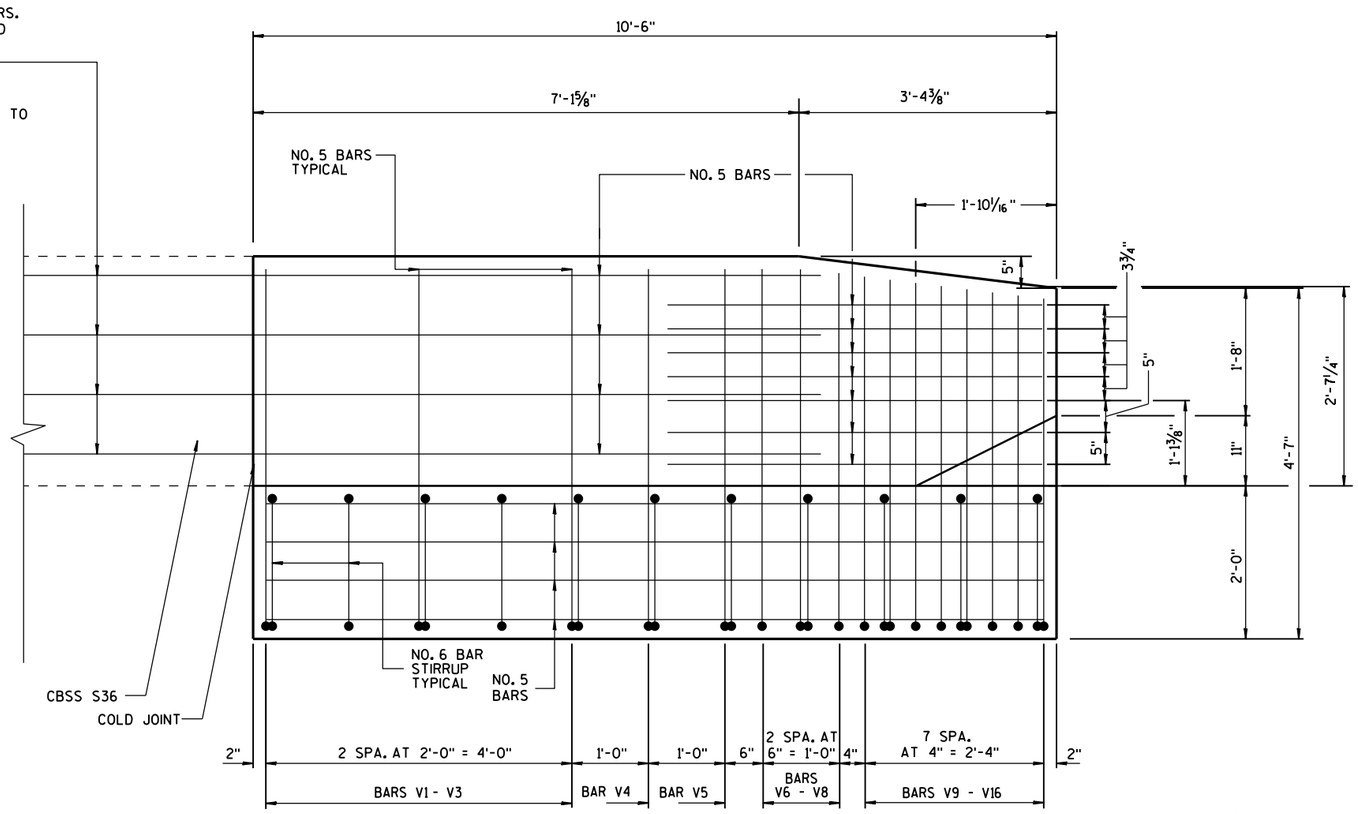

SEE SECTIONS 1 THRU 16

ELEVATION VIEW

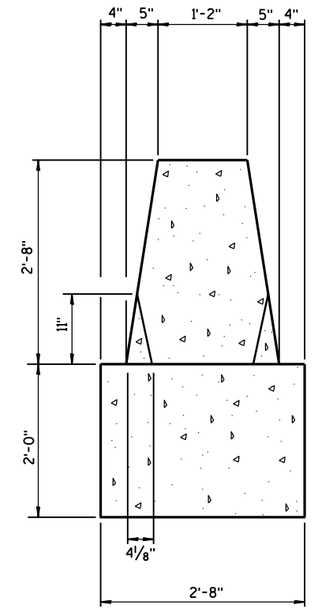

SECTION B-B

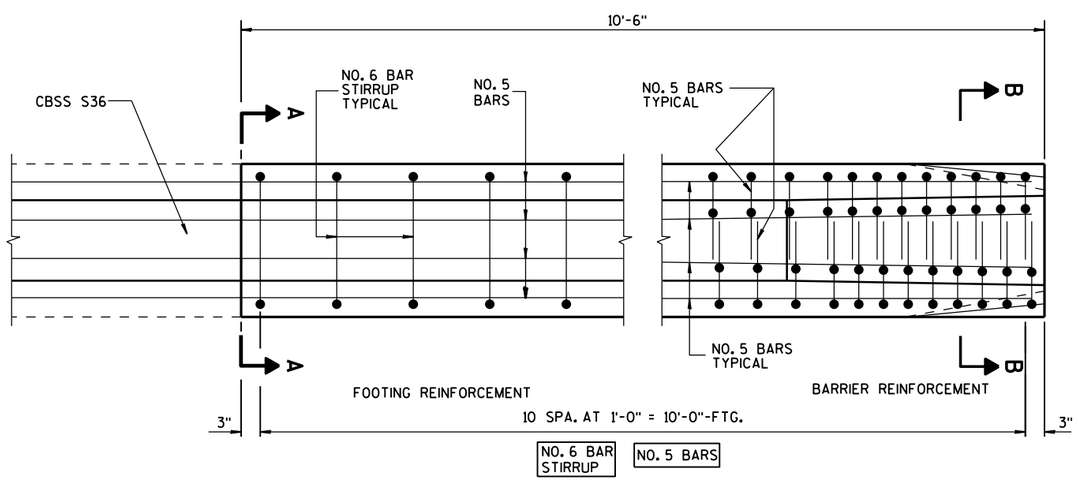

PLAN VIEW

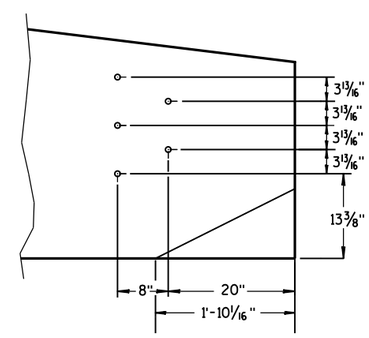

PVC PIPE LOCATIONS

GENERAL NOTES

CONSTRUCT PER STANDARD SPECIFICATION 603.

SPLICES OF LONGITUDINAL BARS TO BE 2' LONG AND FIRMLY TIED AND FASTENED TOGETHER UNLESS NOTED OTHERWISE.

4000 PSI CONCRETE AIR ENTRAINMENT PER STANDARD SPECIFICATIONS SECTION 501.

USE 3/4" BEVEL OR 1" RADIUS ON ALL EXPOSED SHARP EDGES UNLESS NOTED OTHERWISE.

THRIE BEAM ANCHOR INCIDENTAL TO CONCRETE BARRIER ITEM.

INSTALL SCHEDULE 40 PVC PIPE 1" DIAMETER AT LOCATIONS INDICATED.

EXTEND PVC PIPE COMPLETELY THROUGH BARRIER.

CUT ENDS OF PVC PIPE FLUSH WITH FINISHED FACE of BARRIER.

THE NUMBER IN BAR DESIGNATION REPRESENTS THE BARS LOCATION.

2" CLEAR COVER TYPICAL.

CONCRETE BARRIER
SINGLE SLOPE 36"
THRIE BEAM ANCHOR

STATE OF WISCONSIN
DEPARTMENT OF TRANSPORTATION

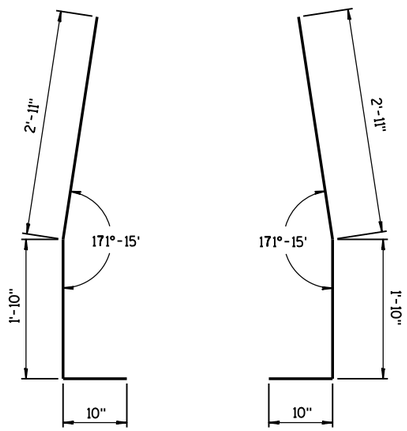

BAR BENDING DETAIL
FOR BARS V1 - V6

BAR CHART
SECTIONS V7 - V11

BAR	A	B
V7	171°-20'	2'-10½"
V8	171°-10'	2'-9½"
V9	171°-10'	2'-9"
V10	171°-05'	2'-8½"
V11	171°-10'	2'-8"

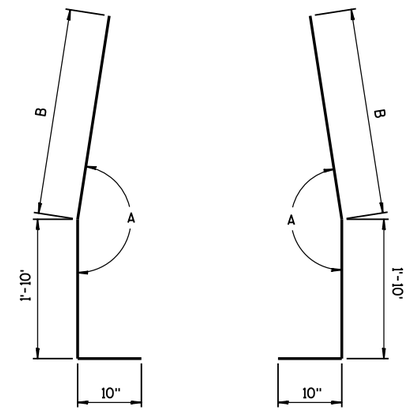

BAR BENDING DETAIL
FOR BARS V7 - V11

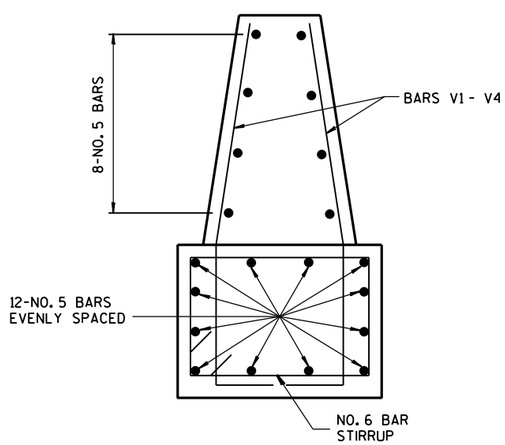

BAR DETAIL
SECTIONS 1 - 4

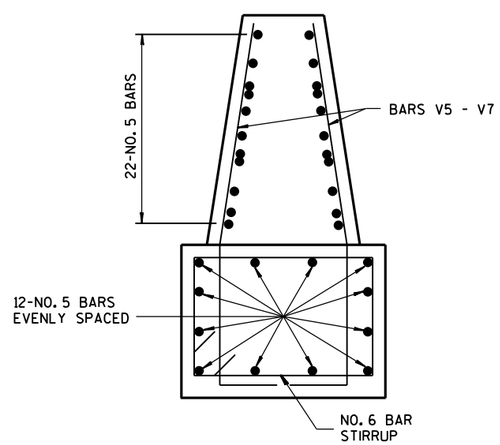

BAR DETAIL
SECTIONS 5 - 7

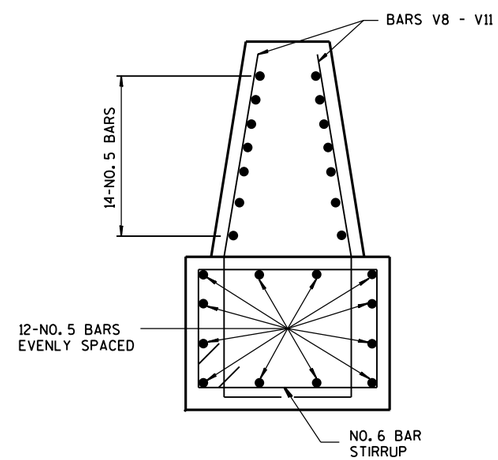

BAR DETAIL
SECTIONS 8 - 11

CONCRETE BARRIER
SINGLE SLOPE 36"
THRIE BEAM ANCHOR

STATE OF WISCONSIN
DEPARTMENT OF TRANSPORTATION

6
S.D.D. 14 B 33-1e

14B33 sheet f: Bar Details for Single Slope 36-inch Thrie Beam Anchorage –Steel Layout #2

BAR CHART
SECTIONS V12 - V13

BAR	A	B	C
V12	2'-2"	171°-15'	2'-3½"
V13	2'-7"	171°-05'	1'-10"

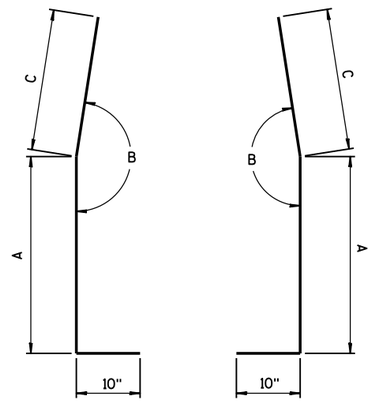

BAR BENDING DETAIL
FOR BARS V12 - V13

BAR CHART
SECTIONS V14 - V16

BAR	A	B	C	D
V14	168°-15'	159°-15'	6"	2'-0"
V15	169°-20'	161°-00'	8"	1'-10"
V16	168°-40'	160°-10'	10"	1'-8"

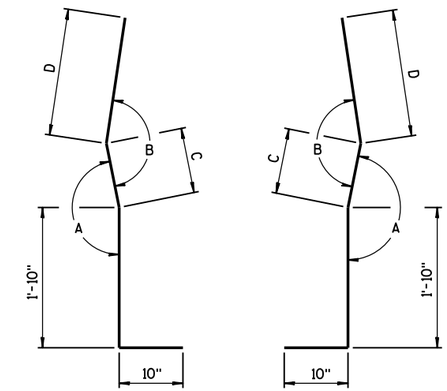

BAR BENDING DETAIL
FOR BARS V14 - V16

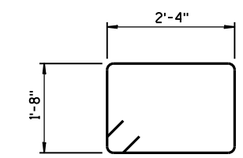

STIRRUP BAR
BENDING DETAIL

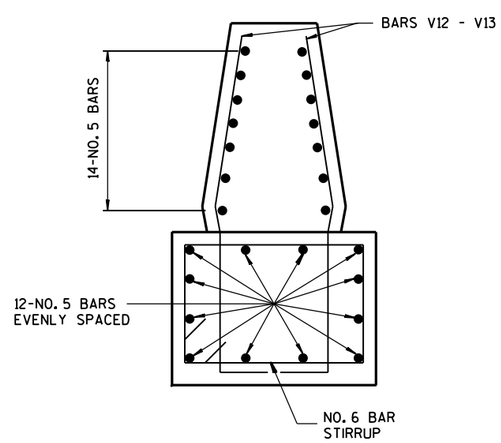

BAR DETAIL
SECTIONS 12 - 13

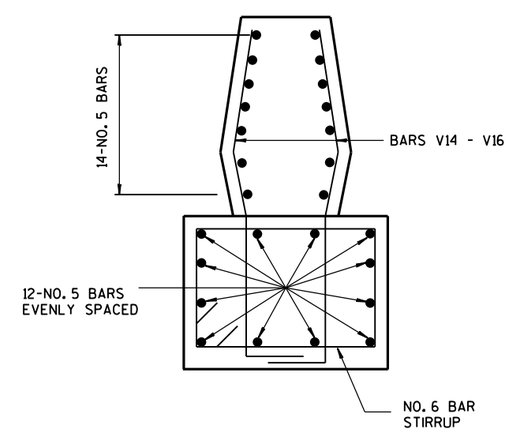

BAR DETAIL
SECTIONS 14 - 16

CONCRETE BARRIER
SINGLE SLOPE 36"
THRIE BEAM ANCHOR

STATE OF WISCONSIN
DEPARTMENT OF TRANSPORTATION

APPROVED

6-3-2010
DATE

/S/ Jerry H. Zogg
ROADWAY STANDARDS DEVELOPMENT ENGINEER

FHWA

6
S.D.D. 14 B 33-1f

14B33 sheet g: Concrete Barrier Single Slope 42-inch Thrie Beam Anchorage-Barrier Layout

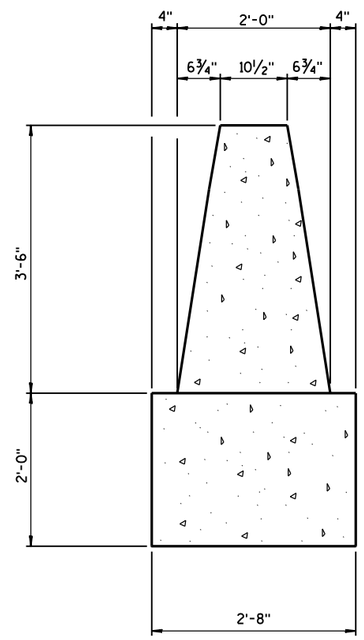

SECTION A-A

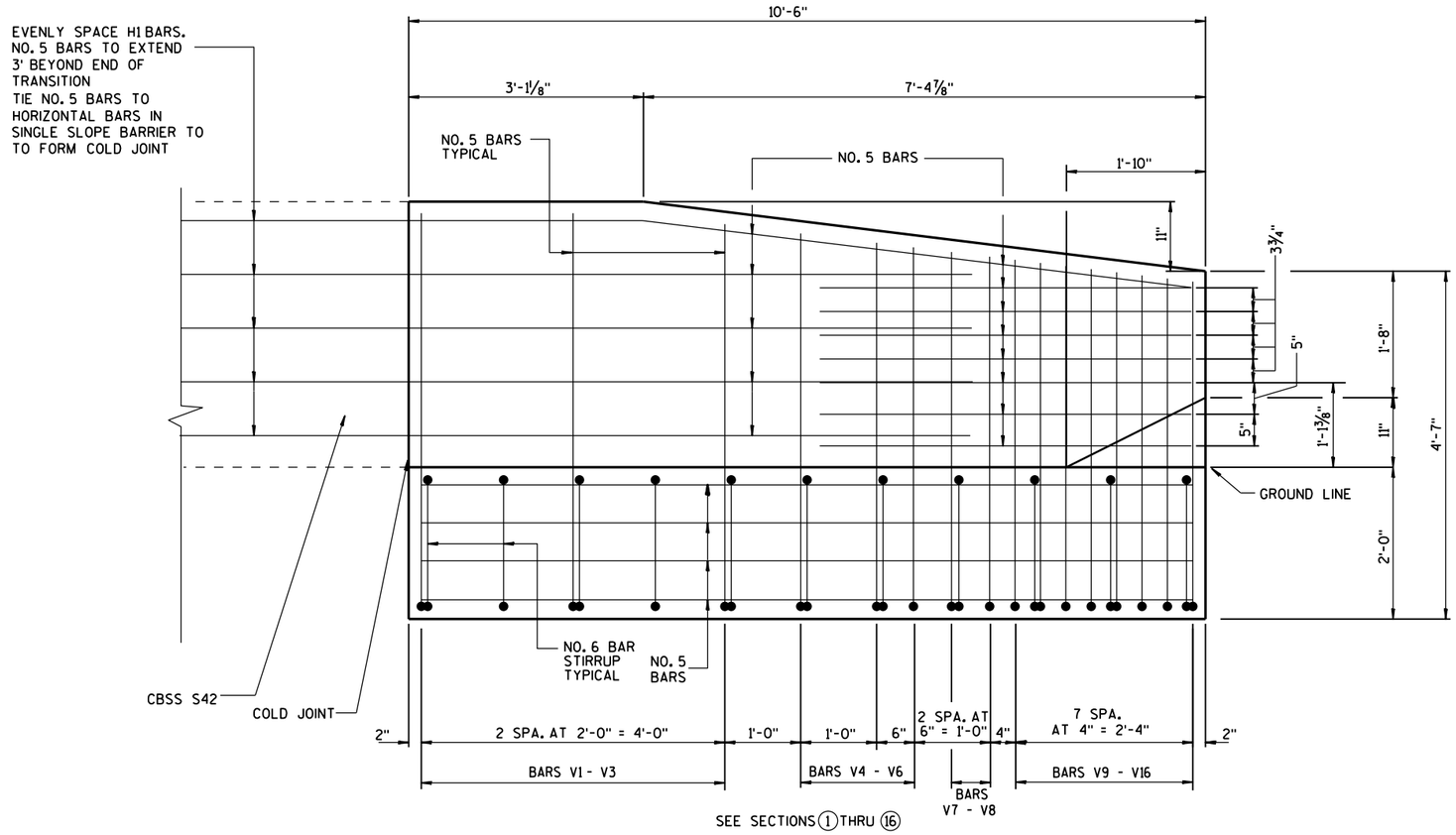

ELEVATION VIEW

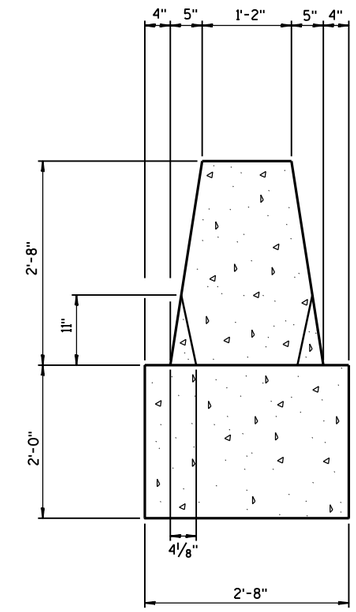

SECTION B-B

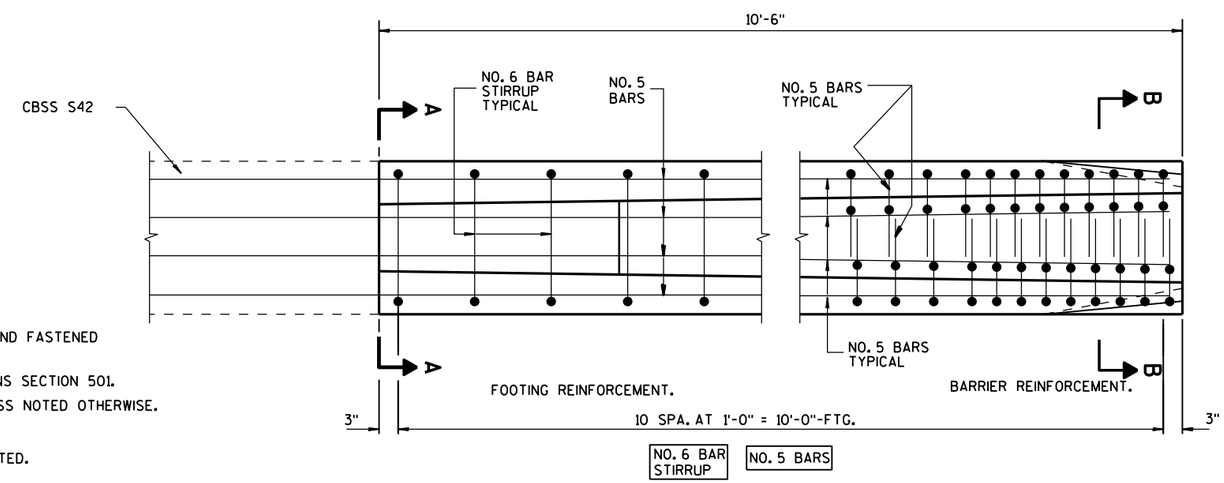

PLAN VIEW

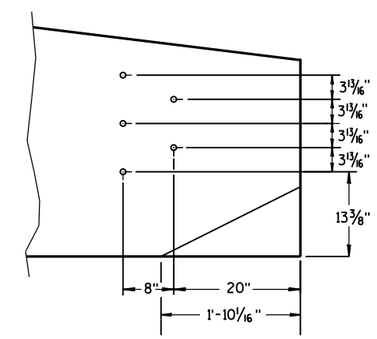

PVC PIPE LOCATIONS

GENERAL NOTES

CONSTRUCT PER STANDARD SPECIFICATION 603.

SPLICES OF LONGITUDINAL BARS TO BE 2' LONG AND FIRMLY TIED AND FASTENED TOGETHER UNLESS NOTED OTHERWISE.

4000 PSI CONCRETE AIR ENTRAINMENT PER STANDARD SPECIFICATIONS SECTION 501.

USE ¾" BEVEL OR 1" RADIUS ON ALL EXPOSED SHARP EDGES UNLESS NOTED OTHERWISE.

THRIE BEAM ANCHOR INCIDENTAL TO CONCRETE BARRIER ITEM.

INSTALL SCHEDULE 40 PVC PIPE 1" DIAMETER AT LOCATIONS INDICATED.

EXTEND PVC PIPE COMPLETELY THROUGH BARRIER.

CUT ENDS OF PVC PIPE FLUSH WITH FINISHED FACE of BARRIER.

THE NUMBER IN BAR DESIGNATION REPRESENTS THE BARS LOCATION.

2" CLEAR COVER TYPICAL.

CONCRETE BARRIER
SINGLE SLOPE 42"
THRIE BEAM ANCHOR

STATE OF WISCONSIN
DEPARTMENT OF TRANSPORTATION

6

S.D.D. 14 B 33-1g

14B33 sheet h: Bar Details for Single Slope 42-inch Thrie Beam Anchorage-Steel Layout #1

BAR CHART
SECTIONS V1 - V11

BAR	A	B
V1	170°-50'	3'-4½"
V2	171°-20'	3'-4½"
V3	171°-30'	3'-2½"
V4	171°-25'	3'-1½"
V5	171°-15'	3'-0"
V6	171°-15'	2'-11"
V7	171°-20'	2'-10½"
V8	171°-10'	2'-9½"
V9	171°-10'	2'-9"
V10	171°-05'	2'-8½"
V11	171°-10'	2'-8"

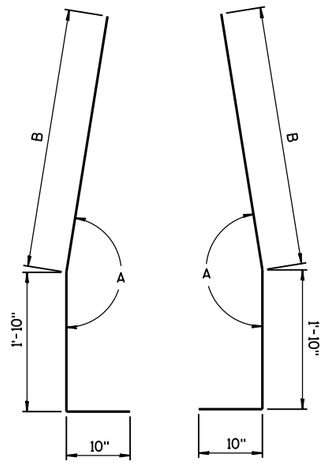

BAR BENDING DETAIL
FOR BARS V1 - V11

BAR CHART
SECTIONS V12 - V13

BAR	A	B	C
V12	2'-2"	171°-15'	2'-3½"
V13	2'-7"	171°-05'	1'-10"

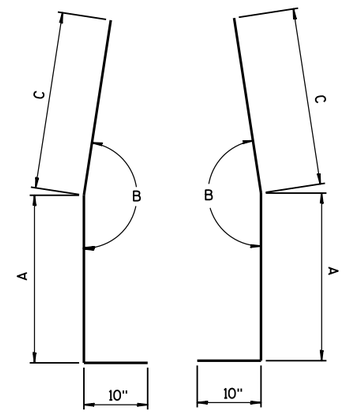

BAR BENDING DETAIL
FOR BARS V12 - V13

BAR CHART
SECTIONS V14 - V16

BAR	A	B	C	D
V14	168°-15'	159°-15'	6"	2'-0"
V15	169°-20'	161°-00'	8"	1'-10"
V16	168°-40'	160°-10'	10"	1'-8"

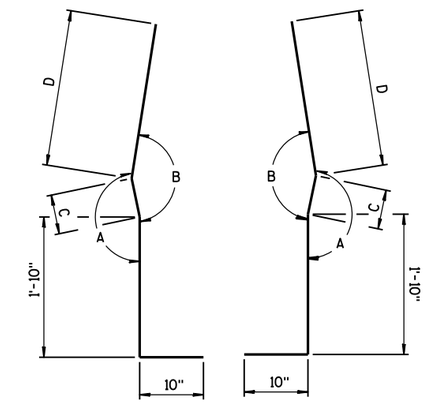

BAR BENDING DETAIL
FOR BARS V14 - V16

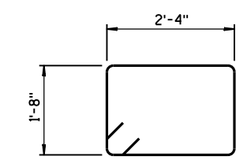

STIRRUP BAR
BENDING DETAIL

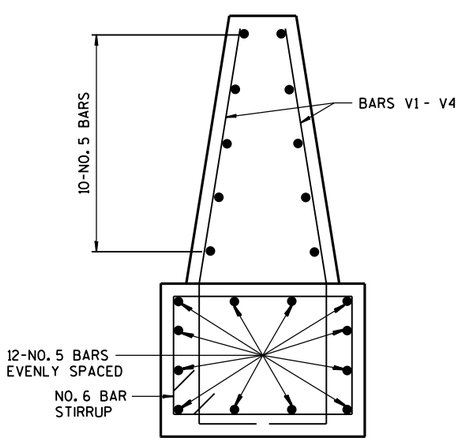

BAR DETAIL
SECTIONS V1 - V4

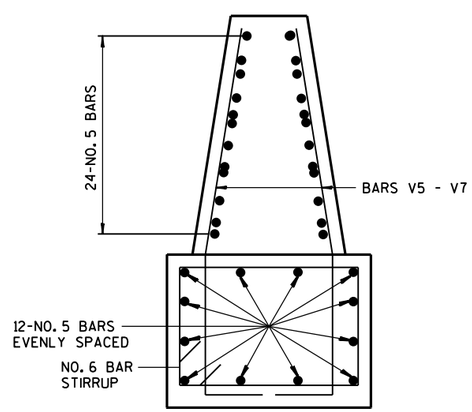

BAR DETAIL
SECTIONS V5 - V7

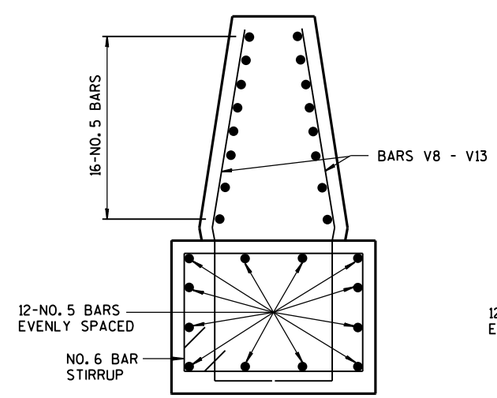

BAR DETAIL
SECTIONS V8 - V13

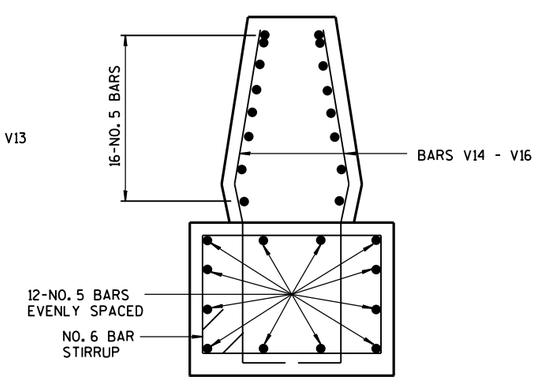

BAR DETAIL
SECTIONS V14 - V16

CONCRETE BARRIER
SINGLE SLOPE 42"
THRIE BEAM ANCHOR

STATE OF WISCONSIN
DEPARTMENT OF TRANSPORTATION

APPROVED
6-3-2010 — DATE
/S/ Jerry H. Zogg — ROADWAY STANDARDS DEVELOPMENT ENGINEER
FHWA

6

S.D.D. 14 B 33-1h

Concrete Barrier Single Slope Thrie Beam Anchorage

References:

MwRSF Report No. TRP-03-47-95

Bid items associated with this drawing:

ITEM NUMBER	DESCRIPTION	UNIT
NONE		

Standardized Special Provisions associated with this drawing:

STSP NUMBER	TITLE
NONE	

Other SDDs associated with this drawing:

SDD 14B20	Thrie Beam Structure Approaches
SDD 14B32	Concrete Barrier Single Slope
SDD 14B34	Concrete Barrier Single Slope Type B
SDD 14B41	Roadside Retaining Walls

Design Notes:

NONE

Contact Person:

Erik Emerson (608) 266-2842