14B34 sheet a: Concrete Barrier Single Slope Type B 32-inch, 36-inch, and 42-inch

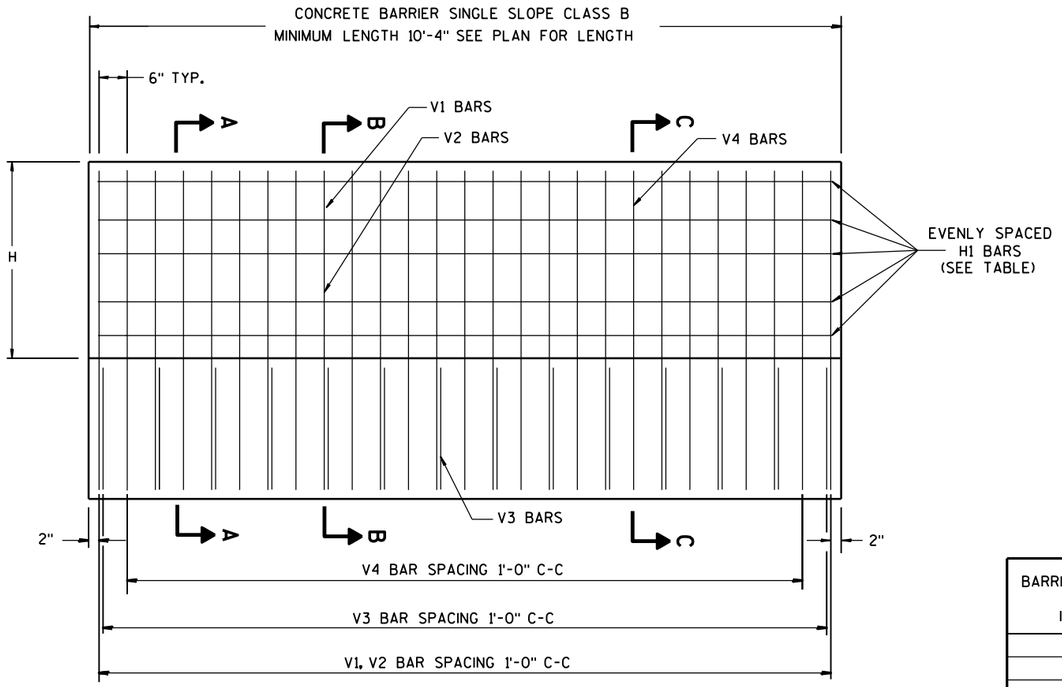

ELEVATION VIEW

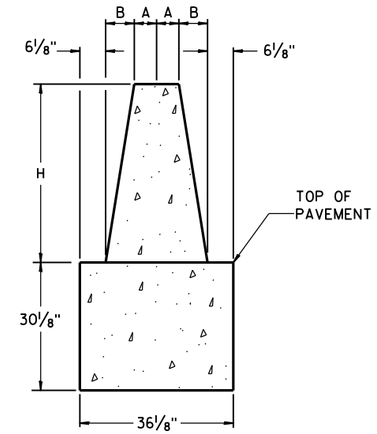

SECTION A-A

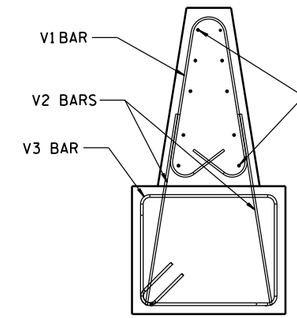

SECTION B-B

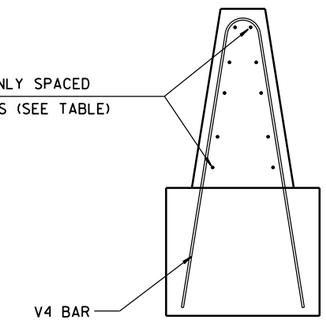

SECTION C-C

BARRIER HEIGHT H INCHES	A INCHES	B INCHES	NUMBER OF H1 BARS EACH
32	7	5	8
36	6¼	5¾	8
42	5¼	6¾	10

BARRIER HEIGHT H INCHES	V1 BAR		V4 BAR	
	C RAD. INCHES	D INCHES	E RAD. INCHES	F INCHES
32	5⅝	18¾	5½	53¾
36	4¾	23¾	4⅞	58⅜
42	3⅝	30½	3⅝	65⅜

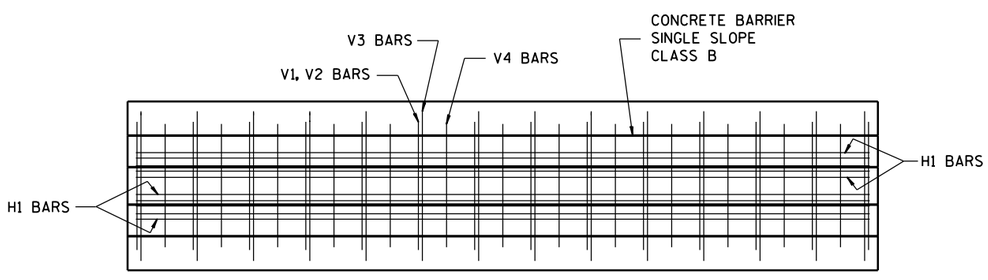

PLAN VIEW

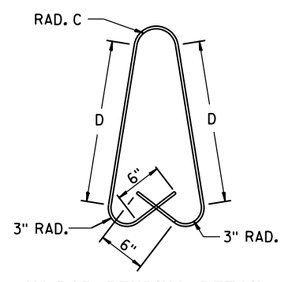

V1 BAR BENDING DETAIL

V1 BARS ARE NO. 4 BARS

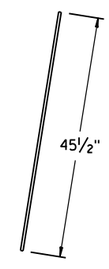

V2 BAR BENDING DETAIL

V2 BARS ARE NO. 5 BARS

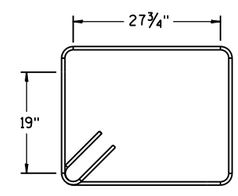

V3 BAR BENDING DETAIL

V3 BARS ARE NO. 6 BARS

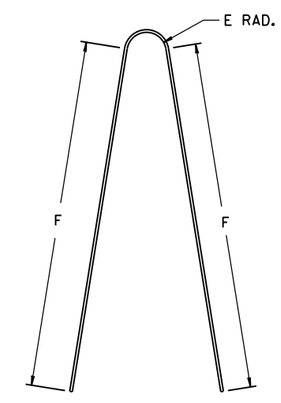

V4 BAR BENDING DETAIL

V4 BARS ARE NO. 6 BARS

GENERAL NOTES

CONSTRUCT PER STANDARD SPECIFICATION 603.

SPLICES OF LONGITUDINAL BARS TO BE 2' LONG AND FIRMLY TIED AND FASTENED TOGETHER UNLESS NOTED OTHERWISE.

4000 PSI CONCRETE AIR ENTRAINMENT PER STANDARD SPECIFICATIONS 501.

USE ¾" BEVEL OR 1" RADIUS ON ALL EXPOSED SHARP EDGES UNLESS NOTED OTHERWISE.

THE NUMBER IN BAR DESIGNATION REPRESENTS THE BARS LOCATION.

2" CLEAR COVER TYPICAL.

WHERE THE CONCRETE BARRIER IS ADDED TO THE FACE OF EXISTING CONCRETE STRUCTURE, MATCH EXISTING WEEP HOLES.

PAVEMENT AND PRINCIPAL WALL JOINTS. EXPANSION JOINT FILLER MATERIAL

PLACE BARRIER PERPENDICULAR TO SHOULDER GRADE, UNLESS INDICATED IN PLAN.

WHEN SWITCHING BETWEEN SLIP FORM AND CAST-IN-PLACE OPERATIONS, EXTEND LONGITUDINAL STEEL 3 FEET BEYOND SLIP-FORMING CUT OFF POINT. EXPOSED STEEL INTO NEXT POURS REINFORCEMENT. LAPS TO BE FIRMLY TIED.

IF REQUIRED USE THRIE BEAM ANCHOR. NO OTHER ANCHOR REQUIRED.

32", 36" & 42"
CONCRETE BARRIER
SINGLE SLOPE CLASS B

STATE OF WISCONSIN
DEPARTMENT OF TRANSPORTATION

6
S.D.D. 14 B 34-1a

14B34 sheet b: Concrete Barrier Single Slope Type B 56-inch

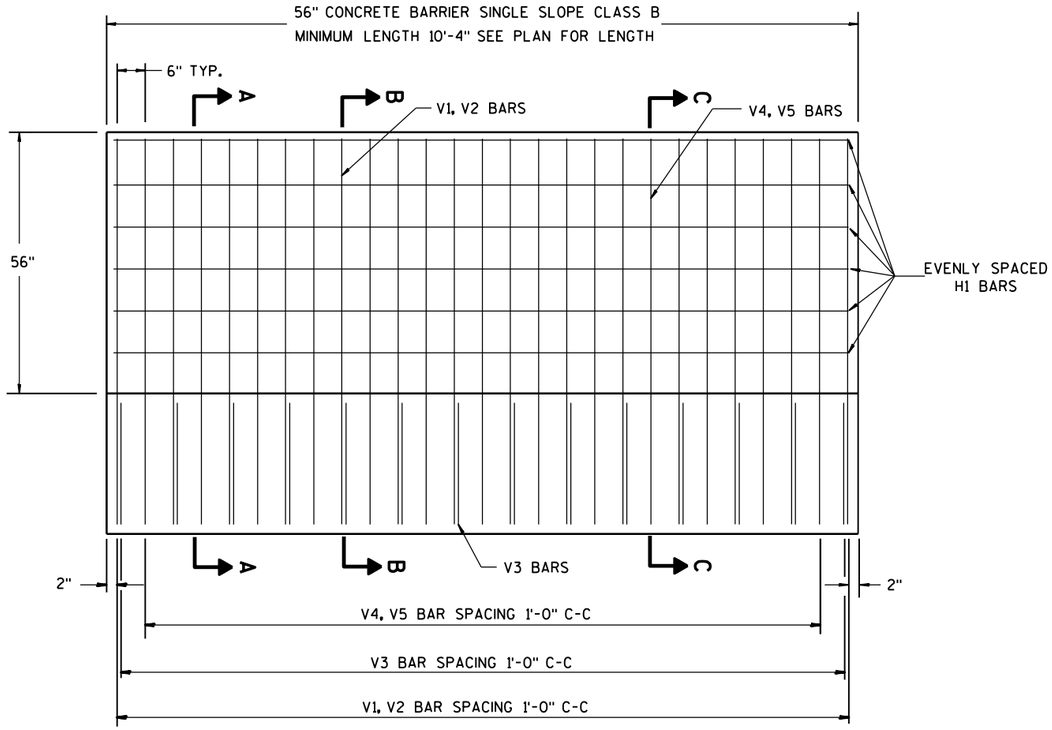

ELEVATION VIEW

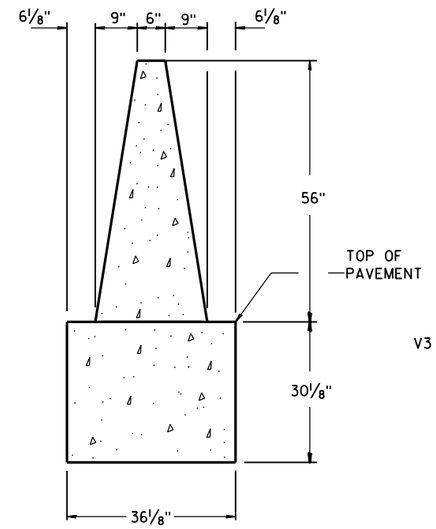

SECTION A-A

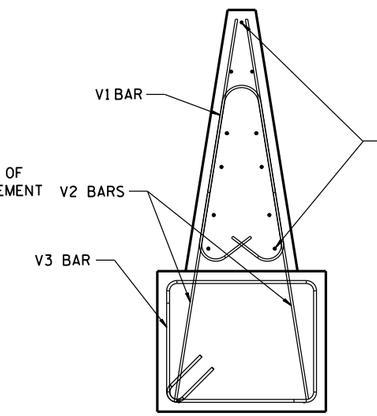

SECTION B-B

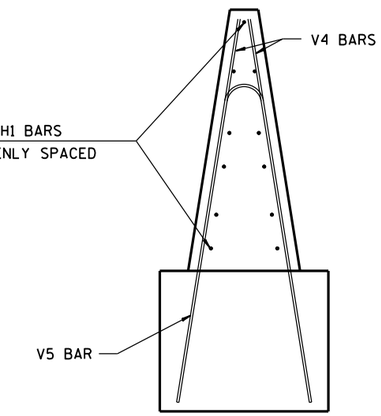

SECTION C-C

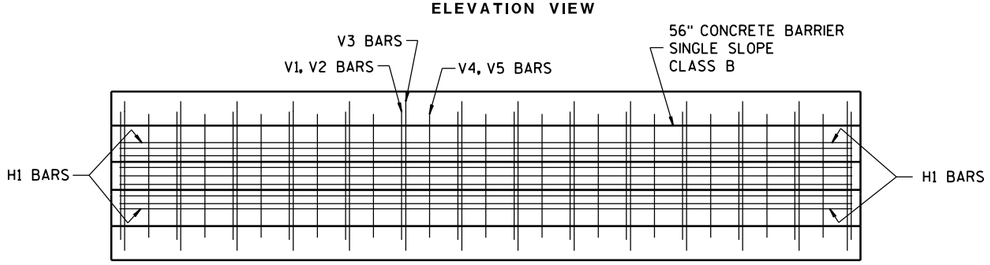

PLAN VIEW

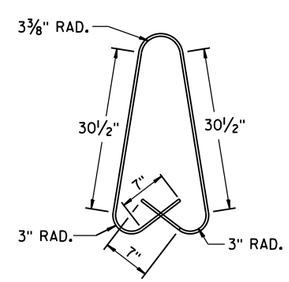

V1 BAR BENDING DETAIL
V1 BARS ARE NO. 4 BARS

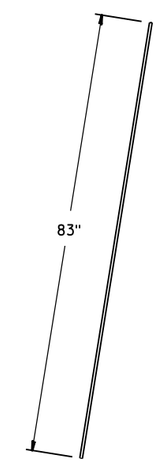

V2 BAR BENDING DETAIL
V2 BARS ARE NO. 5 BARS

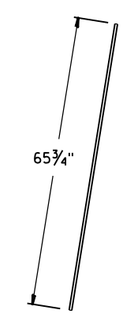

V4 BAR BENDING DETAIL
V4 BARS ARE NO. 5 BARS

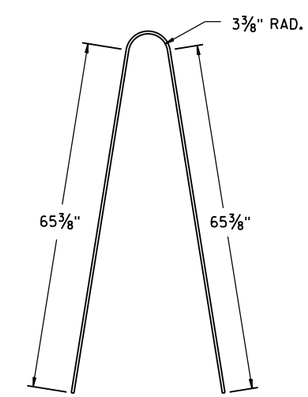

V5 BAR BENDING DETAIL
V4 BARS ARE NO. 6 BARS

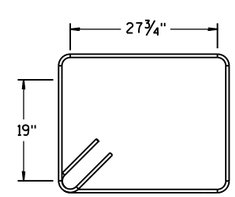

V3 BAR BENDING DETAIL
V3 BARS ARE NO. 6 BARS

GENERAL NOTES

CONSTRUCT PER STANDARD SPECIFICATION 603.

SPLICES OF LONGITUDINAL BARS TO BE 2' LONG AND FIRMLY TIED AND FASTENED TOGETHER UNLESS NOTED OTHERWISE.

4000 PSI CONCRETE AIR ENTRAINMENT PER STANDARD SPECIFICATIONS 501.

USE ¾" BEVEL OR 1" RADIUS ON ALL EXPOSED SHARP EDGES UNLESS NOTED OTHERWISE.

THE NUMBER IN BAR DESIGNATION REPRESENTS THE BARS LOCATION.

2" CLEAR COVER TYPICAL.

WHERE THE CONCRETE BARRIER IS ADDED TO THE FACE OF EXISTING CONCRETE STRUCTURE, MATCH EXISTING WEEP HOLES.

PAVEMENT AND PRINCIPAL WALL JOINTS. EXPANSION JOINT FILLER MATERIAL

PLACE BARRIER PERPENDICULAR TO SHOULDER GRADE, UNLESS INDICATED IN PLAN.

WHEN SWITCHING BETWEEN SLIP FORM AND CAST-IN-PLACE OPERATIONS, EXTEND LONGITUDINAL STEEL 3 FEET BEYOND SLIP-FORMING CUT OFF POINT. EXPOSED STEEL INTO NEXT POURS REINFORCMENT. LAPS TO BE FIRMLY TIED.

IF REQUIRED USE THRIE BEAM ANCHOR. NO OTHER ANCHOR REQUIRED.

56" CONCRETE BARRIER
SINGLE SLOPE CLASS B

STATE OF WISCONSIN
DEPARTMENT OF TRANSPORTATION

6
S.D.D. 14 B 34-1b

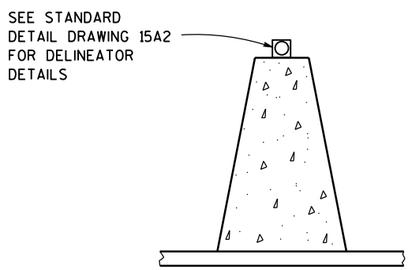

DELINEATION

DELINEATOR SPACING ON HORIZONTAL CURVES

RADIUS OF CURVE	APPROXIMATE SPACING ON CURVE
50 FEET	20 FEET
115 FEET	25 FEET
180 FEET	35 FEET
250 FEET	40 FEET
300 FEET	50 FEET
400 FEET	55 FEET
500 FEET	65 FEET
600 FEET	70 FEET
700 FEET	75 FEET
800 FEET	80 FEET
900 FEET	85 FEET
1000 FEET	90 FEET

DELINEATOR SPACING ON RADIUS GREATER THAN 1000 FEET OR TANGENT SECTIONS

	LENGTH OF BARRIER	REFLECTOR SPACING	NO. SURFACES REFLECTORIZED	MIN. NO. REFLECTORS
ONE WAY TRAFFIC	< 200' > 200'	50' C-C 100' C-C	1 1	3
TWO WAY TRAFFIC	< 200' > 200'	25' C-C 50' C-C	1 1	6
TWO WAY TRAFFIC	< 200' > 200'	50' C-C 100' C-C	2 2	3

CONCRETE BARRIER
SINGLE SLOPE CLASS B

STATE OF WISCONSIN
DEPARTMENT OF TRANSPORTATION

APPROVED

6-3-2010
DATE

/S/ Jerry H. Zogg
ROADWAY STANDARDS DEVELOPMENT ENGINEER

FHWA

Single Slope Barrier for Runs under 40 Feet Long

References:

NONE

Bid items associated with this drawing:

Bid items for single slope barrier and associated transitions are encoded as follows:

BARRIER BID ITEM TYPES		DESCRIPTION	CODE
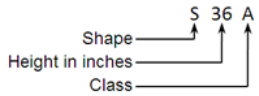 *example: Concrete Barrier Type S36A is a 36" single sloped median retaining wall barrier*	SHAPE	New Jersey shape	NJ
		F shape	F
		Vertical	V
		Single slope barrier	S
TRANSITION BID ITEM TYPES	CLASS	Standard barrier section	none
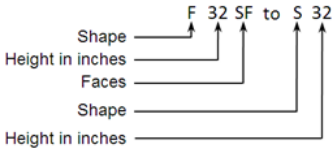		Median retaining wall	A
		Short barrier section	B
		Roadside retaining wall	C
example: Concrete Barrier Transition Type F32SF to S32 is a transition from 32" single faced F barrier to a 32" single sloped barrier	FACES	Double faced barrier	DF
		Single faced barrier	SF

ITEM NUMBER	DESCRIPTION	UNIT
204.0157	Removing Concrete Barrier	LF
603.1332	Concrete Barrier Type S32B	LF
603.1336	Concrete Barrier Type S36B	LF
603.1342	Concrete Barrier Type S42B	LF
603.1356	Concrete Barrier Type S56B	LF
614.0200	Steel Thrie Beam Structure Approach	LF
614.0700	Sand Barrel Array	EACH
614.0800	Crash Cushions Permanent	EACH
614.0805	Crash Cushions Permanent Low Maintenance	EACH
614.0905	Crash Cushion Temporary	EACH
633.0500	Delineator Reflectors	EACH
633.1000	Delineator Brackets	EACH
690.0150	Sawing Asphalt	LF
690.0250	Sawing Concrete	LF

Standardized Special Provisions associated with this drawing:

STSP NUMBER	TITLE
NONE	

Other SDDs associated with this drawing:

SDD 14b20	Thrie Beam Structure Approaches
SDD 14b33	Thrie Beam Anchorages
SDD 15a2	Delineator Post, Delineator Bracket, and Delineator

Design Notes:

Barrier is not structural protection for bridge substructure.

Contact Person:

Erik Emerson (608) 266-2842