14B43 sheet a: Midwest Guardrail System Long Span (MGS L) Two-way Road Layout

GENERAL NOTES

POSTS 1 THROUGH 3 ARE CRT POSTS.
ALL OTHER POSTS SHALL BE WOOD OR STEEL.

SEE SDD 14 B 42 FOR MORE DETAILS.

(A) FLARE FOR MGS EAT SHOWN. IF INSTALLING MGS NO FLARE NEEDED.

(B) VALUES SHOWN ON DRAWING REPRESENT THE MAXIMUM LENGTH. SHORTER DIMENSIONS ARE POSSIBLE. SEE OTHER SECTION OF PLAN FOR MORE INFORMATION.

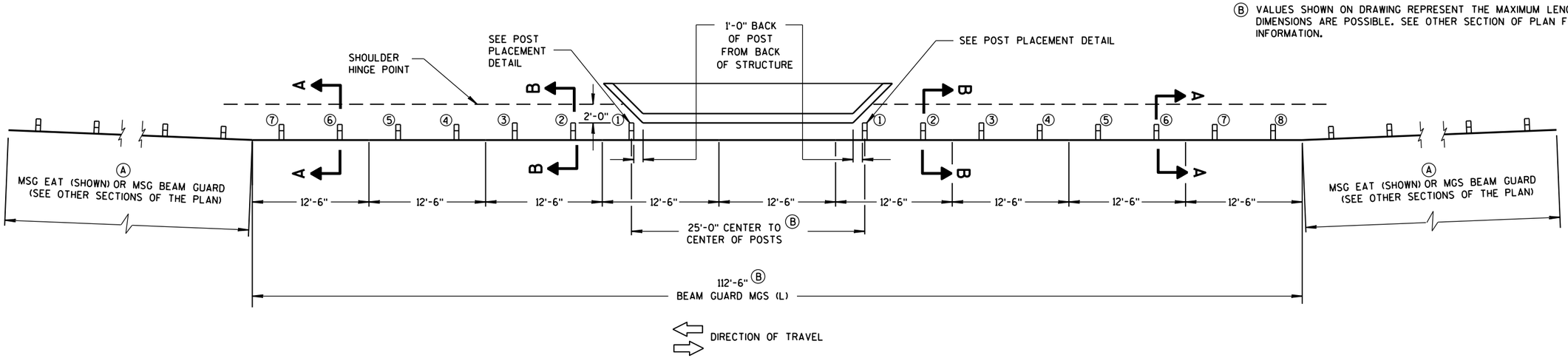

PLAN VIEW

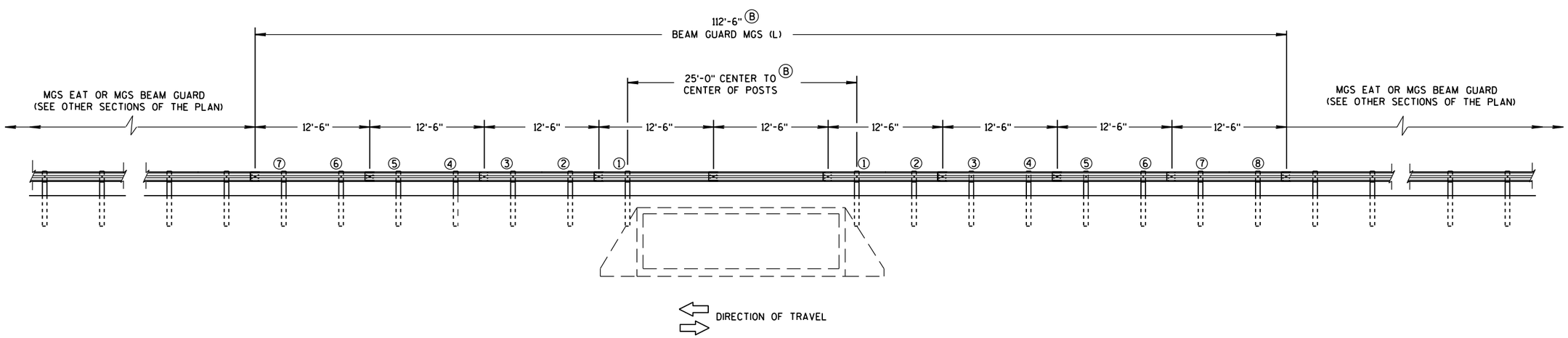

ELEVATION VIEW

MIDWEST GUARDRAIL SYSTEM LONG SPAN MGS (L) TWO-WAY TRAFFIC

MIDWEST GUARDRAIL SYSTEM
LONG SPAN MGS (L)

STATE OF WISCONSIN
DEPARTMENT OF TRANSPORTATION

14B43 sheet b: Midwest Guardrail System Long Span (MGS L) One-way Road Layout

GENERAL NOTES

POSTS 1 THROUGH 3 ARE CRT POSTS.
ALL OTHER POSTS SHALL BE WOOD OR STEEL.

SEE SDD 14 B 42 FOR MORE DETAILS.

(A) FLARE FOR MGS EAT SHOWN. IF INSTALLING MGS NO FLARE NEEDED.

(B) VALUES SHOWN ON DRAWING REPRESENT THE MAXIMUM LENGTH. SHORTER DIMENSIONS ARE POSSIBLE. SEE OTHER SECTION OF PLAN FOR MORE INFORMATION.

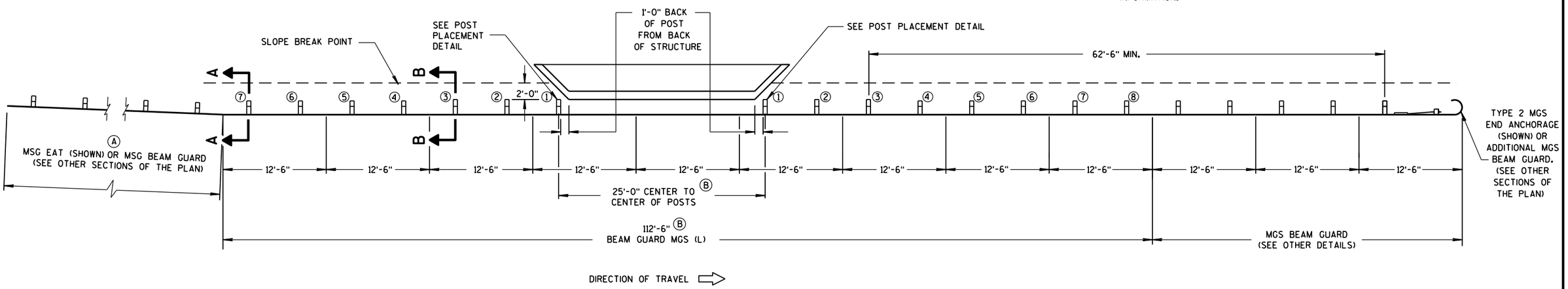

PLAN VIEW

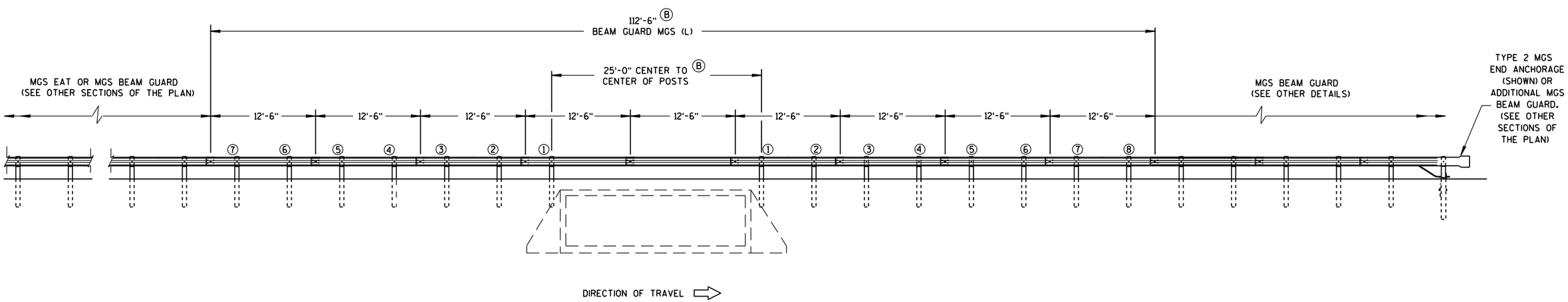

ELEVATION VIEW

MIDWEST GUARDRAIL SYSTEM LONG SPAN MGS (L) ONE-WAY TRAFFIC

MIDWEST GUARDRAIL SYSTEM
LONG SPAN MGS (L)

STATE OF WISCONSIN
DEPARTMENT OF TRANSPORTATION

6
S.D.D. 14 B 43-3b

14B43 sheet c: Midwest Guardrail System Long Span (MGS L) Cross Section and CRT Post Details

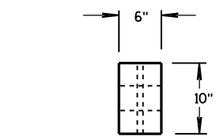

PLAN VIEW

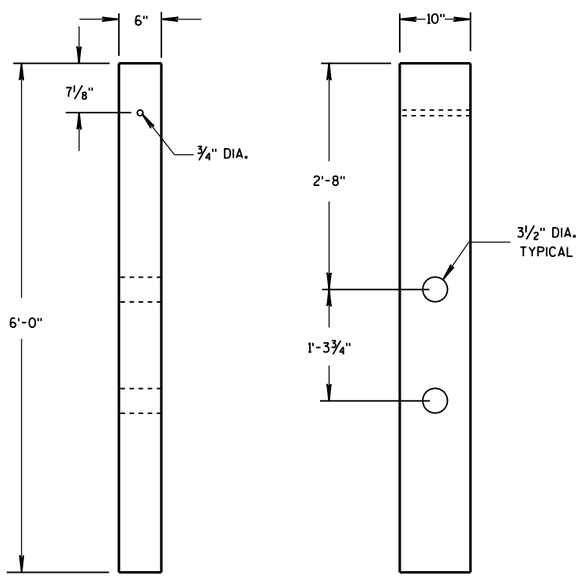

FRONT VIEW

SIDE VIEW

CRT WOOD POST

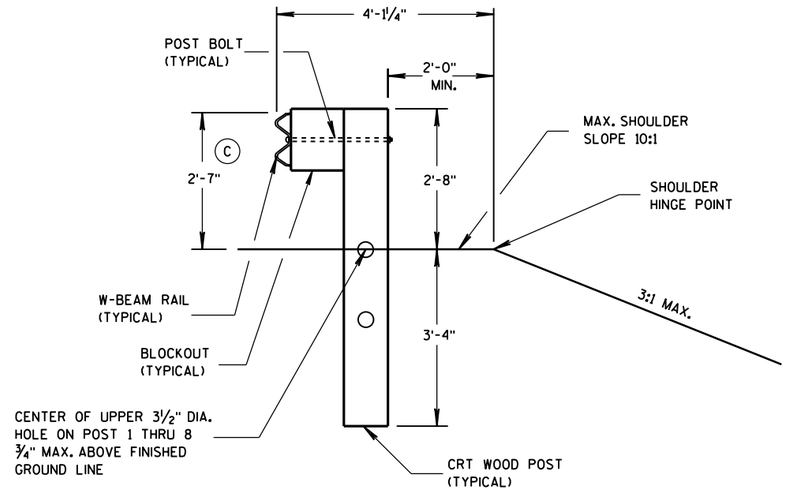

SECTION B-B

POSTS NO. 1-3

SEE OTHER DETAILS

GENERAL NOTES

(C) TOLERANCE FOR TOP OF W-BEAM RAIL IS ± 1".

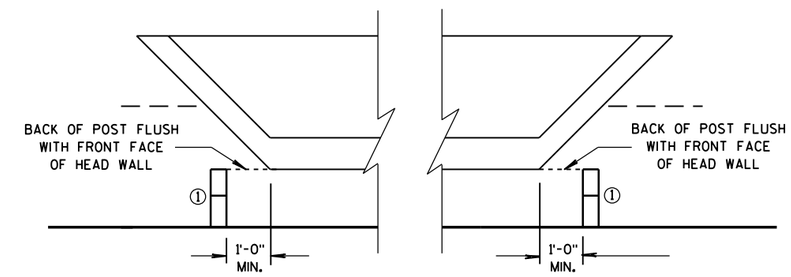

POST PLACEMENT DETAIL

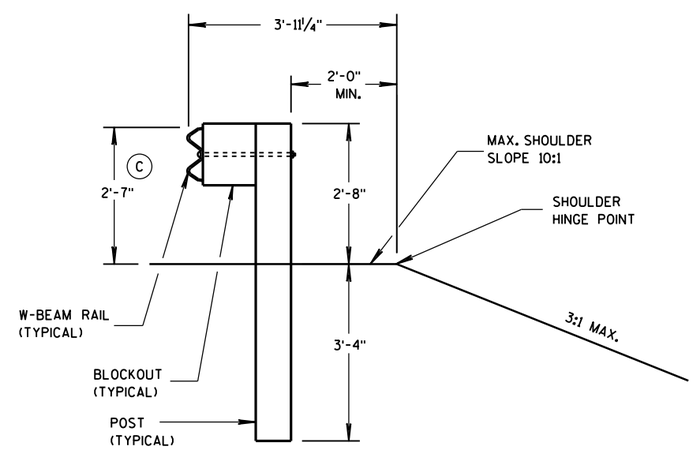

SECTION A-A

POSTS NO. 4-8

SEE OTHER DETAILS

MIDWEST GUARDRAIL SYSTEM
LONG SPAN MGS (L)

STATE OF WISCONSIN
DEPARTMENT OF TRANSPORTATION

APPROVED

5/10/2013
DATE

/S/ Jerry H. Zogg
ROADWAY STANDARDS DEVELOPMENT ENGINEER

FHWA

6

6

S.D.D. 14 B 43-3c

S.D.D. 14 B 43-3c

Midwest Guardrail System Long Span (MGS L)

References:

Standard Spec 614
FDM 11-45-1
FDM 11-45-2
SDD 14b42
AASHTO Roadside Design Guide
MwRSF Report TRP-03-187-07

Bid items associated with this drawing:

ITEM NUMBER	DESCRIPTION	UNIT
614.0010	Barrier System Grading Shaping Finishing	EACH
614.0400	Adjusting Steel Plate Beam Guard	LF
614.0920	Salvaged Rail	LF
614.0925	Salvaged Guardrail End Treatments	EACH
614.0950	Replacing Guardrail Posts and Blocks	EACH
614.0951	Replacing Guardrail Rail and Hardware	LF
614.2300	MGS Guardrail 3	LF
614.2610	MGS Guardrail Terminal EAT	EACH
614.2620	MGS Guardrail Terminal Type 2	EACH

Standardized Special Provisions associated with this drawing:

STSP NUMBER	TITLE
NONE	

Other SDDs associated with this drawing:

SDD 14b28	Guardrail Mow Strip
SDD 14b42	Midwest Guardrail System
SDD 14b44	Midwest Guardrail System Terminal EAT (MGS)
SDD 14b45	Midwest Guardrail System Transitions (MGS)
SDD 14b47	Midwest Guardrail System Type 2 terminal (MGS)

Design Notes:

Midwest guardrail System L (MGS L) is a specially designed semi-rigid barrier system. MGS L is designed to span over drainage structures, box culverts and underground obstructions. Maximum span length (i.e. distance between post 1 to post 1) is shown on front side of this SDD. Smaller spans between post 1 to post 1 may be used. Document span length in plans.

Provide working width for MGS L. Working width for MGS L is 94 inches from front face of rail to front of fixed object. If working width cannot be provided provide documentation within DSR.

Top of a box culvert or other drainage structure's header is flush or below shoulder elevation at the back of post 1. If header is above this elevation it may snag or trip errant vehicle during impact or redirection.

Individual construction detail drawings are required (See FDM 11-45-2.5.2). Post embedment, post location, and grading near post are critical design features. Front sides of SDD show minimum layout of standard MGS upstream and downstream of MGS L. Installing shorter lengths of standard MGS upstream or downstream may impair the function of MGS L.For example on "sheet b", 62 feet and 6 inches of MGS L and MGS, measured from post 3, is required on the downstream end of the box culvert. Reducing grading near MGS L will degrade performance.

MGS L was not designed to be directly connected to stiffer or more flexible semi rigid barriers.

There are other crashworthy options to span beam guard over a drainage structure or box culvert. Coordination with the Bureau of Project Development, Bureau of Structures and Regional Maintenance is required. MGS may have to be connected to drainage structure or box culvert. Connecting MGS to a drainage structure or box culvert requires structural analysis, discussion with maintenance staff, and additional design effort. Special provisions and special details may be required. BPD recommends that this coordination is done early in the design or scoping process.

Another option would be to use a different barrier system to span over a drainage structure, box culvert, or underground obstruction. For an example, a single slope concrete barrier could be installed over a shallow fill culvert.

Do not install curb and gutter in front of or below rail when using MGS type L.

MGS L may use grading and shaping items.
See SDD 14b42 for additional guidance.

Contact Person:

Erik Emerson (608) 266-2842