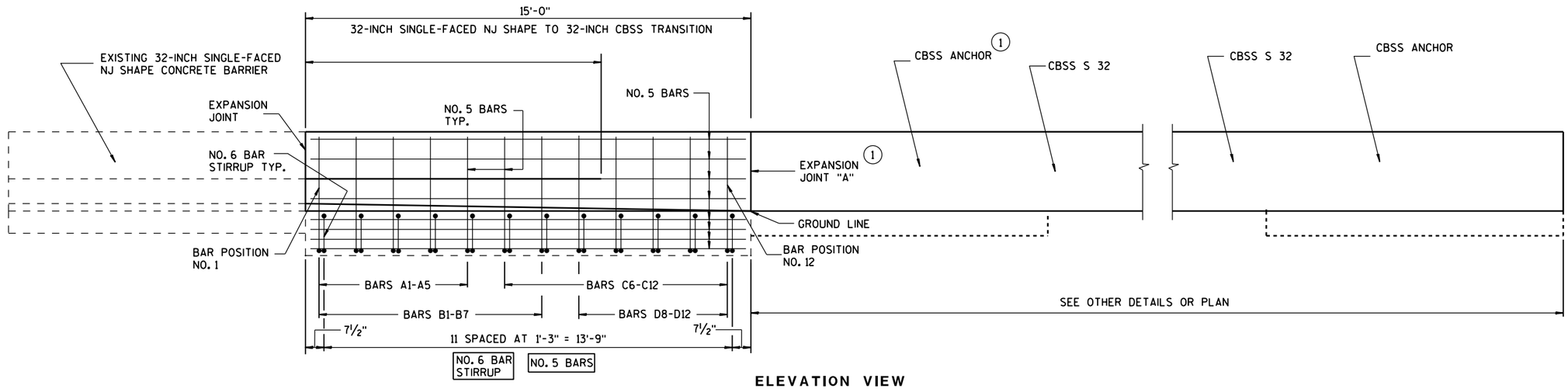

ELEVATION VIEW

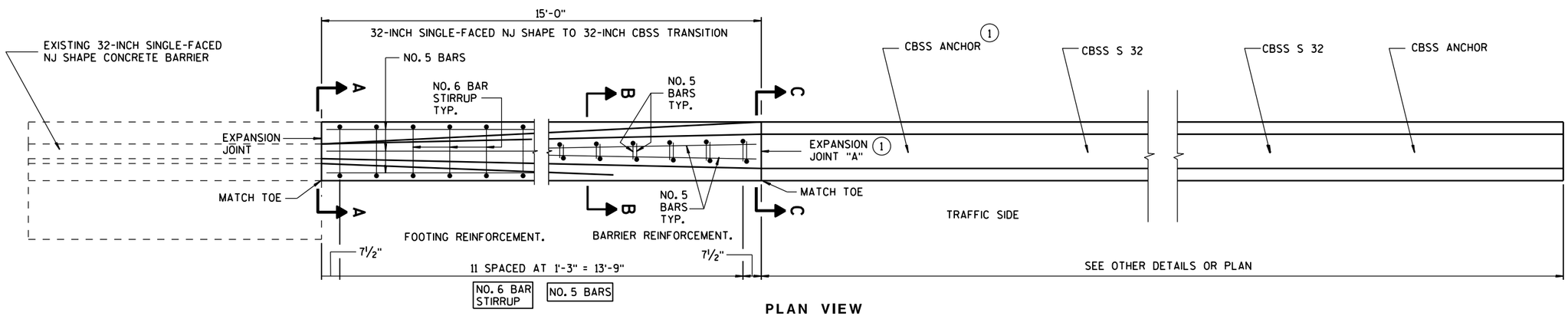

PLAN VIEW

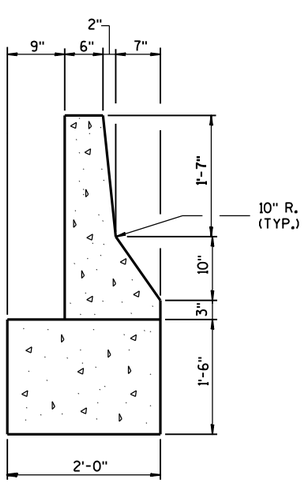

SECTION A-A

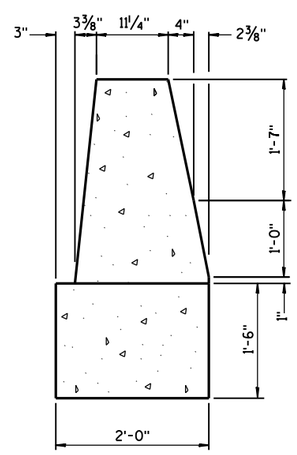

SECTION B-B

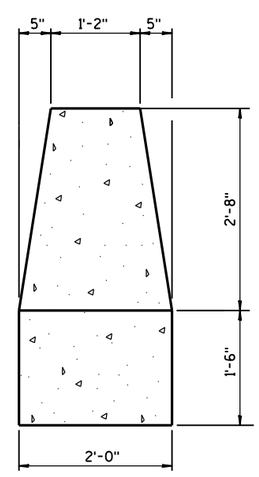

SECTION C-C

GENERAL NOTES

CONSTRUCT PER STANDARD SPECIFICATION 603.

SPLICES OF LONGITUDINAL BARS TO BE 2' LONG AND FIRMLY TIED AND FASTENED TOGETHER UNLESS NOTED OTHERWISE.

4000 PSI CONCRETE AIR ENTRAINMENT PER STANDARD SPECIFICATIONS 501.

USE ¾" BEVEL OR 1" RADIUS ON ALL EXPOSED SHARP EDGES UNLESS NOTED OTHERWISE.

THE NUMBER IN BAR DESIGNATION REPRESENTS THE BARS LOCATION.

2" CLEAR COVER TYPICAL.

(1) EXPANSION JOINT "A" MAY BE REPLACED WITH A COLD -JOINT PROVIDED THAT 3 FEET OF LAP OF LONGITUDINAL STEEL IS PROVIDED. IF COLD-JOINT IS USED ANCHOR NOT REQUIRED.

32-INCH SINGLE-FACED NJ SHAPE CONCRETE BARRIER TO 32-INCH SINGLE SLOPE CONCRETE BARRIER TRANSITION

STATE OF WISCONSIN
DEPARTMENT OF TRANSPORTATION

6
S.D.D. 14 B 35-1a

14B35 sheet b: 32-Inch Single-Faced NJ Shape Concrete Barrier to 32-Inch single slope Concrete Barrier Transition-Steel Layout

6

"A" BAR CHART
BAR POSITIONS NO.1 - NO.5

BAR	A
A1	90°
A2	89°-15'
A3	88°-50'
A4	88°-15'
A5	87°-50'

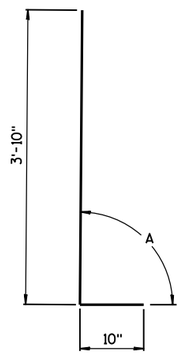

"A" BAR
BENDING DETAIL

"B" BAR CHART
BAR POSITIONS NO.1 - NO. 7

BAR	A	B	C
B1	1'-6"	146°-20'	152°-40'
B2	1'-6"	149°-25'	156°-35'
B3	1'-6"	152°-35'	160°-30'
B4	1'-5½"	155°-20'	163°-55'
B5	1'-5½"	158°-30'	167°-50'
B6	1'-5"	161°-45'	171°-50'
B7	1'-5"	164°-20'	175°-10'

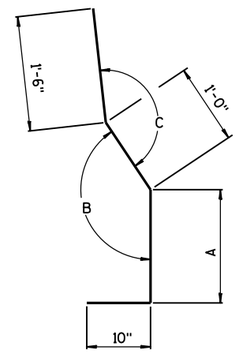

"B" BAR
BENDING DETAIL

"C" BAR CHART
BAR POSITIONS NO. 6 - NO. 12

BAR	A	B
C6	176°	2'-6"
C7	175°-05'	2'-6"
C8	174°-25'	2'-6"
C9	173°-45'	2'-6¼"
C10	172°-50'	2'-6¼"
C11	172°-10'	2'-6½"
C12	171°-30'	2'-6½"

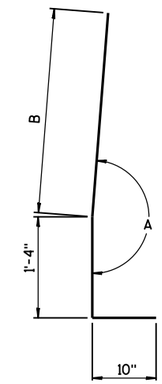

"C" BAR
BENDING DETAIL

"D" BAR CHART
BAR POSITIONS NO. 8 - NO. 12

BAR	A	B	C
D8	1'-5"	168°-05'	2'-6"
D9	1'-5"	168°-50'	2'-6"
D10	1'-5"	169°-25'	2'-6"
D11	1'-4"	170°-10'	2'-6½"
D12	1'-4"	170°-50'	2'-6½"

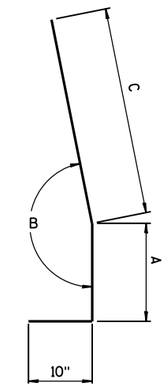

"D" BAR
BENDING DETAIL

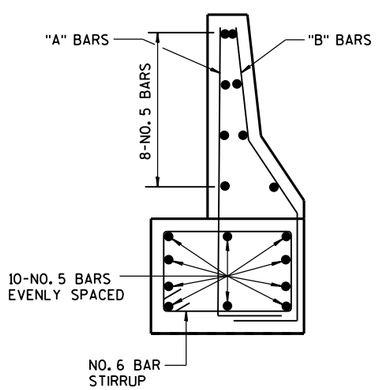

BAR DETAIL
BAR POSITIONS NO. 1 - NO. 5

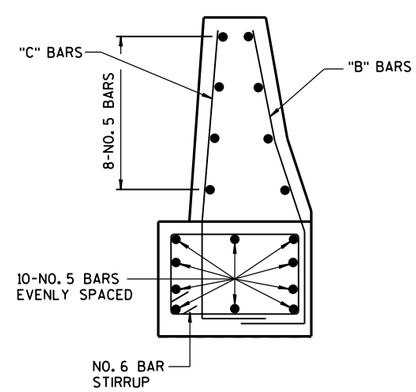

BAR DETAIL
BAR POSITION NO. 6 - NO. 8

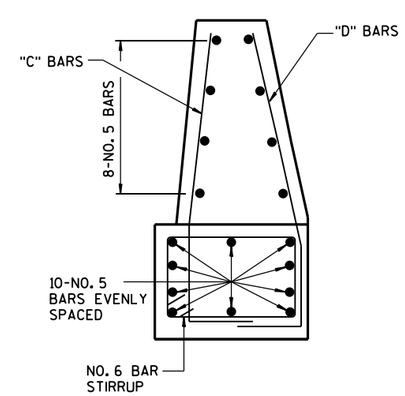

BAR DETAIL
BAR POSITIONS NO. 9 - NO. 12

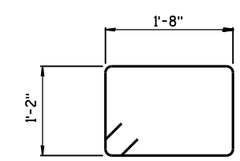

STIRRUP BAR
BENDING DETAIL

32-INCH SINGLE-FACED NJ SHAPE
CONCRETE BARRIER TO 32-INCH SINGLE
SLOPE CONCRETE BARRIER TRANSITION

STATE OF WISCONSIN
DEPARTMENT OF TRANSPORTATION

APPROVED

6-3-2010
DATE

/S/ Jerry H. Zogg
ROADWAY STANDARDS DEVELOPMENT
ENGINEER

FHWA

S.D.D. 14 B 35-1b

6

S.D.D. 14 B 35-1b

14B35 sheet c: 32-Inch Single-Faced NJ Shape Concrete Barrier to 36-Inch single slope Concrete Barrier Transition-Transition Lay

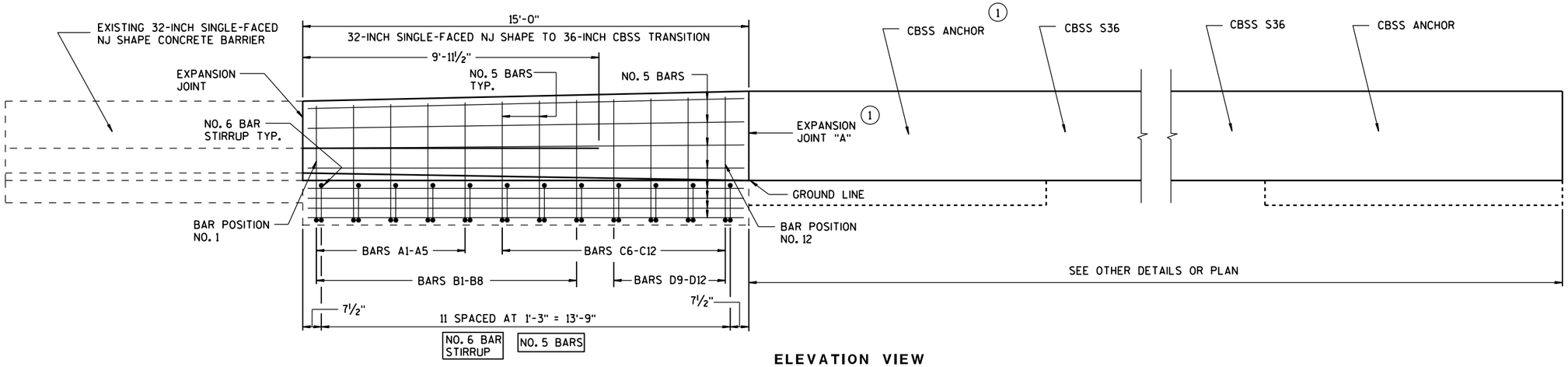

ELEVATION VIEW

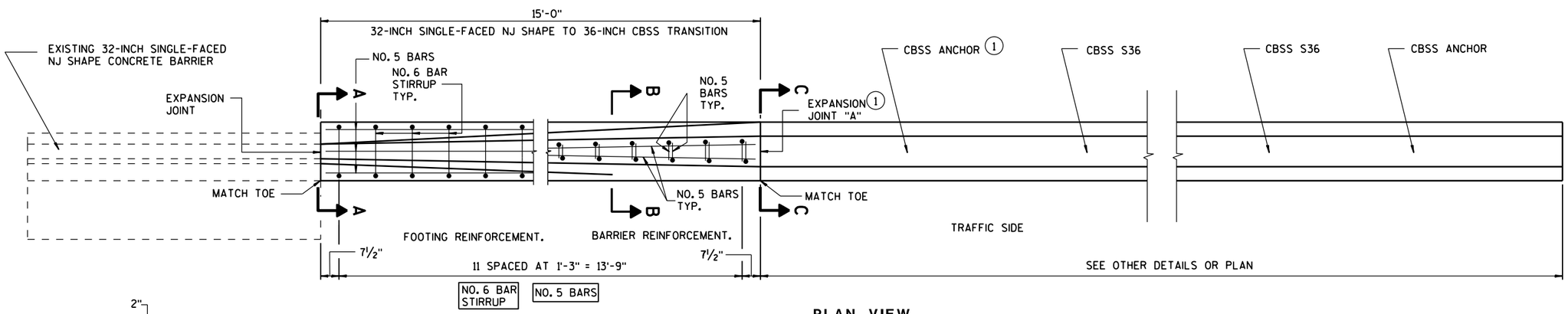

PLAN VIEW

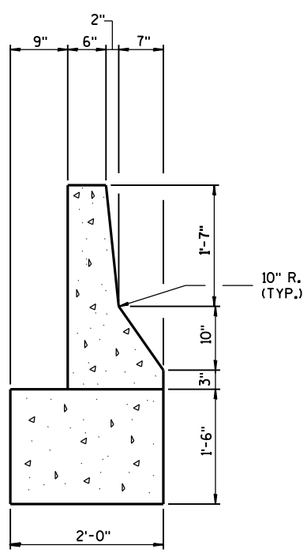

SECTION A-A

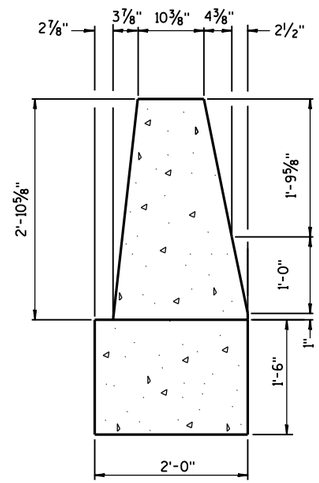

SECTION B-B

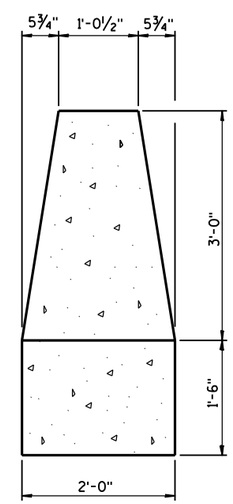

SECTION C-C

GENERAL NOTES

CONSTRUCT PER STANDARD SPECIFICATION 603.

SPLICES OF LONGITUDINAL BARS TO BE 2' LONG AND FIRMLY TIED AND FASTENED TOGETHER UNLESS NOTED OTHERWISE.

4000 PSI CONCRETE AIR ENTRAINMENT PER STANDARD SPECIFICATIONS 501.

USE ¾" BEVEL OR 1" RADIUS ON ALL EXPOSED SHARP EDGES UNLESS NOTED OTHERWISE.

THE NUMBER IN BAR DESIGNATION REPRESENTS THE BARS LOCATION.

2" CLEAR COVER TYPICAL.

(1) EXPANSION JOINT "A" MAY BE REPLACED WITH A COLD-JOINT PROVIDED THAT 3 FEET OF LAP OF LONGITUDINAL STEEL IS PROVIDED. IF COLD-JOINT IS USED ANCHOR NOT REQUIRED.

32-INCH SINGLE-FACED NJ SHAPE CONCRETE BARRIER TO 36-INCH SINGLE SLOPE CONCRETE BARRIER TRANSITION

STATE OF WISCONSIN
DEPARTMENT OF TRANSPORTATION

6

6

S.D.D. 14 B 35-1c

S.D.D. 14 B 35-1c

14B35 sheet d: 32-Inch Single-Faced NJ Shape Concrete Barrier to 36-Inch single slope Concrete Barrier Transition-Steel Layout

"A" BAR CHART
BAR POSITIONS
NO.1 - NO.5

BAR	A	B
A1	3'-10"	89°-35'
A2	3'-10"	88°-40'
A3	3'-11"	87°-50'
A4	3'-11"	87°-10'
A5	3'-11½"	86°-15'

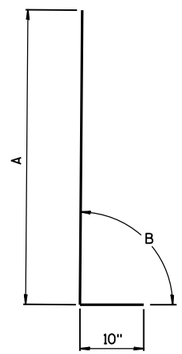

"A" BAR
BENDING DETAIL

"B" BAR CHART
BAR POSITIONS NO.1 - NO. 8

BAR	A	B	C	D
B1	1'-6"	146°-20'	152°-40'	1'-6"
B2	1'-6"	149°-25'	156°-45'	1'-6"
B3	1'-6"	152°-40'	160°-55'	1'-6½"
B4	1'-6"	155°-40'	164°-30'	1'-7"
B5	1'-5½"	158°-30'	167°-55'	1-'7"
B6	1'-5"	161°-45'	172°	1'-7½
B7	1'-5"	164°-25'	175°-05'	1'-8"
B8	1'-5"	167°-30'	179°	1'-8"

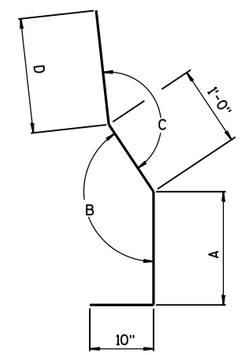

"B" BAR
BENDING DETAIL

"C" BAR CHART
BAR POSITIONS NO. 6 - NO. 12

BAR	A	B	C
C6	1'-4"	175°-35'	2'-8"
C7	1'-4"	174°-45'	2'-8"
C8	1'-4"	174°	2'-8½"
C9	1'-4"	173°-15'	2'-9"
C10	1'-4"	172°-45'	2'-9½"
C11	1'-3½"	172°	2' -9½"
C12	1'-3½"	171°-15'	2' -10"

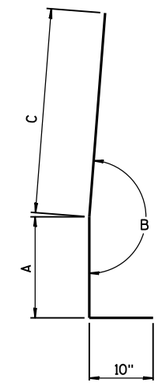

"C" BAR
BENDING DETAIL

"D" BAR CHART
BAR POSITIONS NO. 9 - NO. 12

BAR	A	B	C
D9	1'-5"	168°-45'	2'-8½"
D10	1'-4½"	169°-30'	2'-9"
D11	1'-4"	170°-15'	2'-9½"
D12	1'-4"	170°-40'	2'-10"

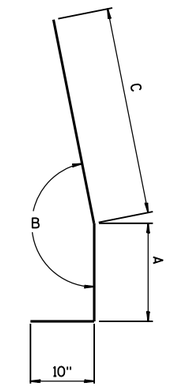

"D" BAR
BENDING DETAIL

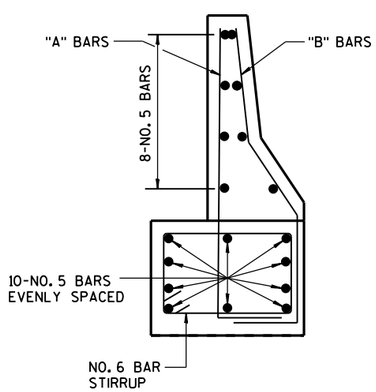

BAR DETAIL
BAR POSITIONS NO. 1 - NO. 5

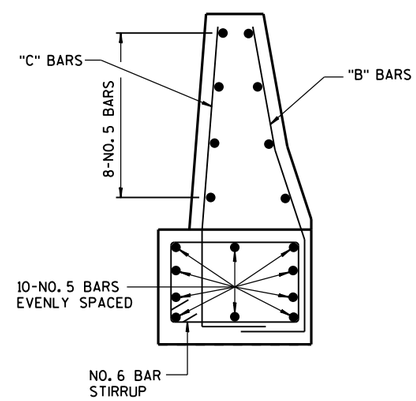

BAR DETAIL
BAR POSITION NO. 6 - NO. 8

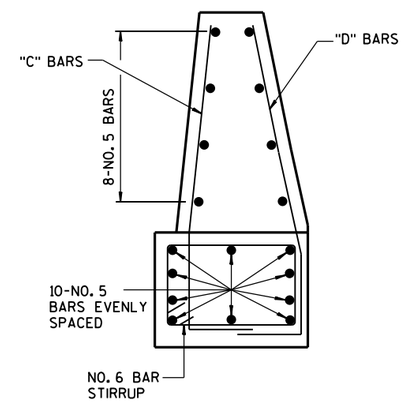

BAR DETAIL
BAR POSITIONS NO. 9 - NO. 12

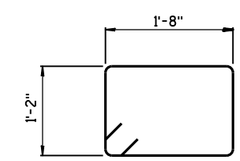

STIRRUP BAR
BENDING DETAIL

32-INCH SINGLE-FACED NJ SHAPE
CONCRETE BARRIER TO 36-INCH SINGLE
SLOPE CONCRETE BARRIER TRANSITION

STATE OF WISCONSIN
DEPARTMENT OF TRANSPORTATION

APPROVED
6-3-2010
DATE
/S/ Jerry H. Zogg
ROADWAY STANDARDS DEVELOPMENT
ENGINEER
FHWA

6

6

S.D.D. 14 B 35-1d

S.D.D. 14 B 35-1d

14B35 sheet e: 42-Inch Single-Faced NJ Shape Concrete Barrier to 42-Inch single slope Concrete Barrier Transition-Transition Lay

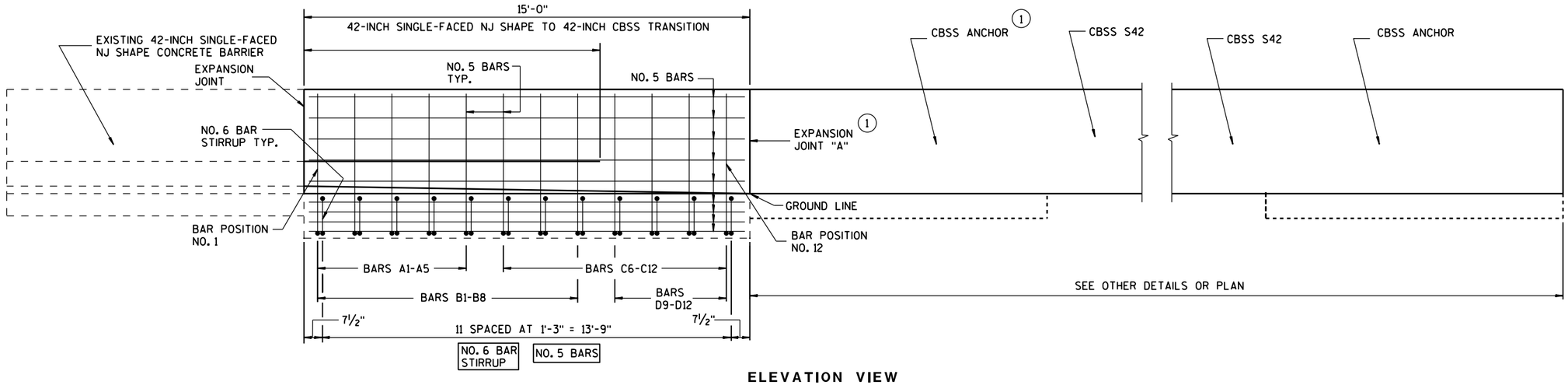

ELEVATION VIEW

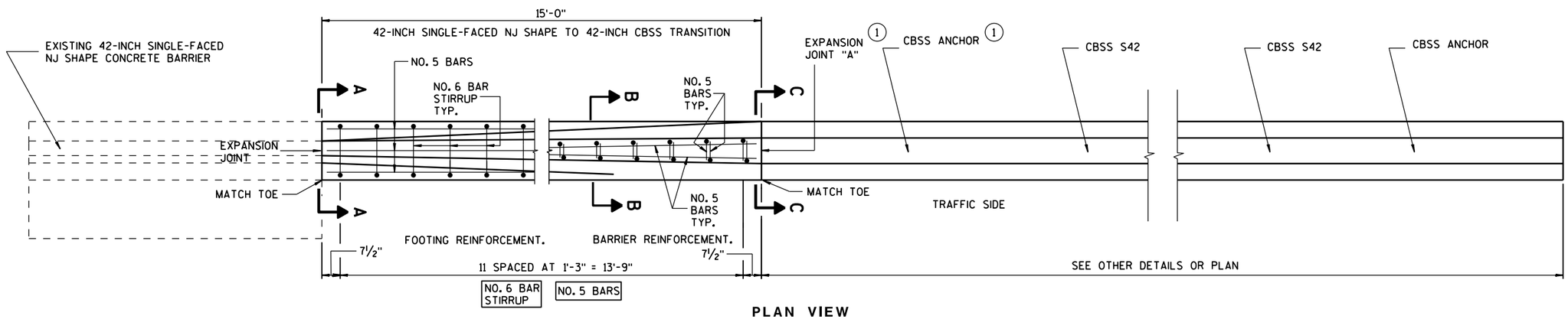

PLAN VIEW

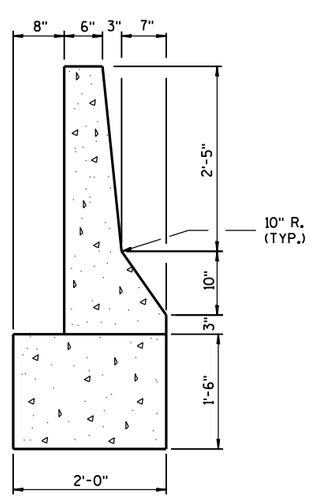

SECTION A-A

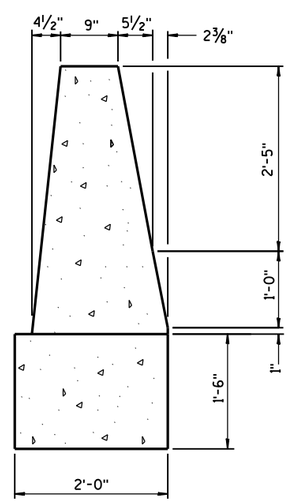

SECTION B-B

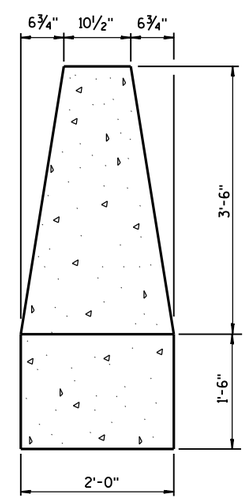

SECTION C-C

GENERAL NOTES

CONSTRUCT PER STANDARD SPECIFICATION 603.

SPLICES OF LONGITUDINAL BARS TO BE 2' LONG AND FIRMLY TIED AND FASTENED TOGETHER UNLESS NOTED OTHERWISE.

4000 PSI CONCRETE AIR ENTRAINMENT PER STANDARD SPECIFICATIONS 501.

USE ¾" BEVEL OR 1" RADIUS ON ALL EXPOSED SHARP EDGES UNLESS NOTED OTHERWISE.

THE NUMBER IN BAR DESIGNATION REPRESENTS THE BARS LOCATION.

2" CLEAR COVER TYPICAL.

(1) EXPANSION JOINT "A" MAY BE REPLACED WITH A COLD-JOINT PROVIDED THAT 3 FEET OF LAP OF LONGITUDINAL STEEL IS PROVIDED. IF COLD-JOINT IS USED ANCHOR NOT REQUIRED.

42-INCH SINGLE-FACED NJ SHAPE CONCRETE BARRIER TO 42-INCH SINGLE SLOPE CONCRETE BARRIER TRANSITION

STATE OF WISCONSIN
DEPARTMENT OF TRANSPORTATION

6
S.D.D. 14 B 35-1e

14B35 sheet f: 42-Inch Single-Faced NJ Shape Concrete Barrier to 42-Inch single slope Concrete Barrier Transition-Steel Layout

6

"A" BAR CHART
BAR POSITIONS
NO.1 - NO.5

BAR	A
A1	89°-40'
A2	89°-05'
A3	88°-30'
A4	88°-05'
A5	87°-35'

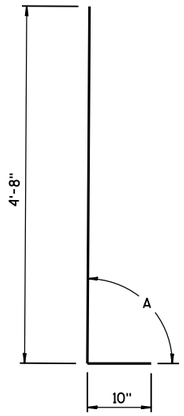

"A" BAR
BENDING DETAIL

"B" BAR CHART
BAR POSITIONS NO.1 - NO. 8

BAR	A	B	C	D
B1	1'-6"	146°-50'	2'-3⅞"	152°-55'
B2	1'-6"	150°-30'	2'-3½"	157°-20'
B3	1'-6"	152°-40'	2'-3½"	160°
B4	1'-6"	155°-20'	2'-3½"	163°-10'
B5	1'-5½"	158°-30'	2'-3½"	167°-05'
B6	1'-5¼"	161°-10'	2'-4"	170°-30'
B7	1'-5"	164°-55'	2'-4"	174°-45'
B8	1'-5"	167°-30'	2'-3½"	176°-50'

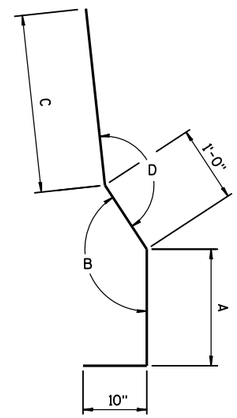

"B" BAR
BENDING DETAIL

"C" BAR CHART
BAR POSITIONS NO. 6 - NO. 12

BAR	A	B
C6	175°-45'	3'-4¼"
C7	174°-55'	3'-4¼"
C8	175°-05'	3'-4¼"
C9	173°-35'	3'-4¼"
C10	172°-40'	3'-4½"
C11	171°-50'	3'-4½"
C12	171°-15'	3'-4½"

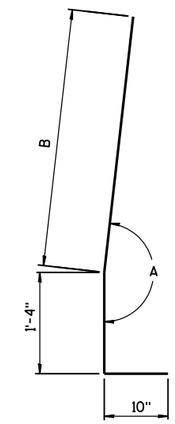

"C" BAR
BENDING DETAIL

"D" BAR CHART
BAR POSITIONS NO. 9 - NO. 12

BAR	A	B	C
D9	1'-4½"	169°-20'	3'-4"
D10	1'-4½"	169°-55'	3'-4"
D11	1'-4½"	170°-15'	3'-4¼"
D12	1'-4"	170°-30'	3'-4½"

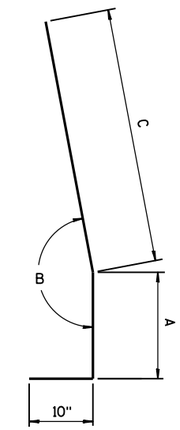

"D" BAR
BENDING DETAIL

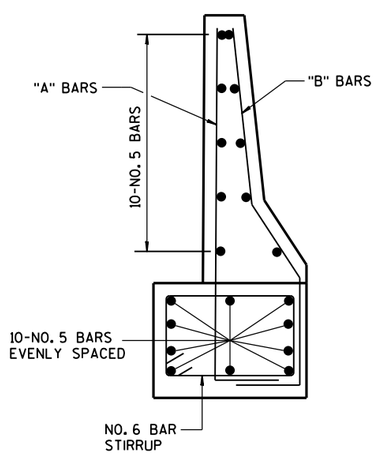

BAR DETAIL
BAR POSITIONS NO. 1 - NO. 5

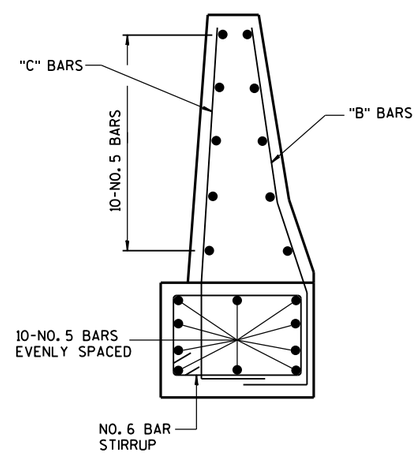

BAR DETAIL
BAR POSITION NO. 6 - NO. 8

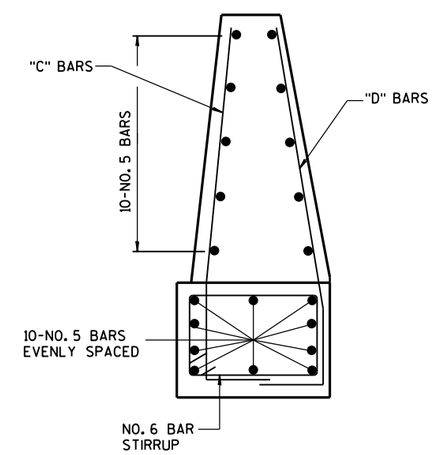

BAR DETAIL
BAR POSITIONS NO. 9 - NO. 12

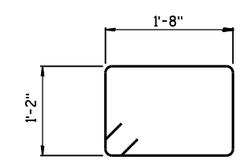

STIRRUP BAR
BENDING DETAIL

42-INCH SINGLE-FACED NJ SHAPE
CONCRETE BARRIER TO 42-INCH SINGLE
SLOPE CONCRETE BARRIER TRANSITION

STATE OF WISCONSIN
DEPARTMENT OF TRANSPORTATION

APPROVED
6-3-2010 — DATE
/S/ Jerry H. Zogg — ROADWAY STANDARDS DEVELOPMENT ENGINEER
FHWA

S.D.D. 14 B 35-1f

References:

NONE

Bid items associated with this drawing:

Bid items for single slope barrier and associated transitions are encoded as follows:

BARRIER BID ITEM TYPES		DESCRIPTION	CODE
S 36 A Shape Height in inches Class *example: Concrete Barrier Type S36A is a 36" single sloped median retaining wall barrier*	SHAPE	New Jersey shape	NJ
		F shape	F
		Vertical	V
		Single slope barrier	S
TRANSITION BID ITEM TYPES F 32 SF to S 32 Shape Height in inches Faces Shape Height in inches *example: Concrete Barrier Transition Type F32SF to S32 is a transition from 32" single faced F barrier to a 32" single sloped barrier*	CLASS	Standard barrier section	none
		Median retaining wall	A
		Short barrier section	B
		Roadside retaining wall	C
	FACES	Double faced barrier	DF
		Single faced barrier	SF

ITEM NUMBER	DESCRIPTION	UNIT
204.0157	Removing Concrete Barrier	LF
603.1332	Concrete Barrier Type S32B	LF
603.1336	Concrete Barrier Type S36B	LF
603.1342	Concrete Barrier Type S42B	LF
603.1356	Concrete Barrier Type S56B	LF
614.0200	Steel Thrie Beam Structure Approach	LF
614.0700	Sand Barrel Array	EACH
614.0800	Crash Cushions Permanent	EACH
614.0805	Crash Cushions Permanent Low Maintenance	EACH
614.0905	Crash Cushion Temporary	EACH
633.0500	Delineator Reflectors	EACH
633.1000	Delineator Brackets	EACH
690.0150	Sawing Asphalt	LF
690.0250	Sawing Concrete	LF

Standardized Special Provisions associated with this drawing:

STSP NUMBER	TITLE
NONE	

Other SDDs associated with this drawing:

SDD 14b20	Thrie Beam Structure Approaches
SDD 14b33	Thrie Beam Anchorages
SDD 15a2	Delineator Post, Delineator Bracket, and Delineator

Design Notes:

Barrier is not structural protection for bridge substructure.

Contact Person:

Erik Emerson (608) 266-2842